(Figure 1). By contrast, in species with long-term sperm storage and first-male sperm precedence (e.g., some insects), we predict that females will seek sperm-borne benefits from their initial mate, who is likely to fertilise eggs, but seek seminal fluid-borne benefits from subsequent mates who are unlikely to achieve fertilisations.

Although sperm-borne factors are likely to be important only when fertilisation is possible, seminal fluid quality could be important throughout life. In mammals, eggs and even early embryos may be permeable to seminal fluid-borne molecules. In insects, although mature (chorionated) eggs may be impermeable except via the specialised opening (micropyle) used for sperm entry [8], the female's immature eggs may nonetheless be susceptible to seminal fluid-borne factors. At the fertile stage, females may therefore seek males that provide an optimal combination of both sperm-borne and seminal fluid-borne factors.

Selection on females to acquire and utilise seminal fluid without fertilisation could explain why females in some species mate and exhibit preferences even when they are immature or outside of their fertile window [8]. However, such female strategies will be sexually antagonistic because seminal fluid donation without fertilisation represents wasted investment for males, perhaps driving the evolution of male counterstrategies. This situation is similar to the cuckoldry that occurs in many birds with biparental care, in which females may seek extra-pair sires for their offspring while benefiting from the parental investment of their social mate. In such situations, males may be selected to assess the risk of cuckoldry and reduce investment if their perceived risk of investing in another male's offspring is high, while females may evolve to deceive males to take advantage of valuable seminal fluid products. Such cuckoldry could also select for manipulative seminal fluid components that delay or reduce the probability of female remating, or even male mate preferences that exploit seminal investment by previous males. A number of questions need to be answered to understand the role of seminal fluid in the evolution of mate choice (see Outstanding Questions).

Acknowledgments

Funding for this work was provided by the Australian Research Council through a Discovery Early Career Researcher Award to A.J.C. and a Future Fellowship to R.B. We thank three anonymous reviewers for insightful comments.

[1]UNSW Australia, Evolution and Ecology Research Centre and School of Biological, Earth, and Environmental Science, Sydney, NSW 2052, Australia

*Correspondence: r.bonduriansky@unsw.edu.au (R. Bonduriansky).

http://dx.doi.org/10.1016/j.tree.2016.02.004

References

1. Eberhard, W.G. and Cordero, C. (1995) Sexual selection by cryptic female choice on male seminal products – a new bridge between sexual selection and reproductive physiology. *Trends Ecol. Evol.* 10, 493–496
2. Eberhard, W.G. (1997) Sexual selection by cryptic female choice in insects and arachnids. In *The Evolution of Mating Systems in Insects and Arachnids* (Choe, J.C. and Crespi, B.J., eds), pp. 32–57, Cambridge University Press
3. Pitnick, S. *et al.* (1997) Phylogenetic examination of female incorporation of ejaculate in *Drosophila*. *Evolution* 51, 833–845
4. Perry, J.C. *et al.* (2013) The seminal symphony: how to compose an ejaculate. *Trends Ecol. Evol.* 28, 414–422
5. Bromfield, J.J. (2014) Seminal fluid and reproduction: much more than previously thought. *J. Assist. Reprod. Genet.* 31, 627–636
6. Crawford, G. *et al.* (2015) The role of seminal plasma for improved outcomes during in vitro fertilization treatment: review of the literature and meta-analysis. *Hum. Reprod. Update* 21, 275–284
7. Garcia-Gonzalez, F. and Dowling, D.K. (2015) Transgenerational effects of sexual interactions and sexual conflict: non-sires boost the fecundity of females in the following generation. *Biol. Lett.* 11, 20150067
8. Crean, A.J. *et al.* (2014) Revisiting telegony: offspring inherit an acquired characteristic of their mother's previous mate. *Ecol. Lett.* 17, 1545–1552
9. Crean, A.J. and Bonduriansky, R. (2014) What is a paternal effect? *Trends Ecol. Evol.* 29, 554–559
10. Vojtech, L. *et al.* (2014) Exosomes in human semen carry a distinctive repertoire of small non-coding RNAs with potential regulatory functions. *Nucleic Acids Res.* 42, 7290–7304
11. Eaton, S.A. *et al.* (2015) Roll over Weismann: extracellular vesicles in the transgenerational transmission of environmental effects. *Epigenomics* 7, 1165–1171
12. Hoelzer, G.A. (1989) The good parent process of sexual selection. *Anim. Behav.* 38, 1067–1078

Outstanding Questions

What are the environmental factors that induce seminal fluid-mediated paternal and non-sire effects, and what are the offspring traits affected in various taxa?

Which seminal fluid components mediate paternal and non-sire effects in nonresource-based systems, and what are the molecular/developmental mechanisms involved?

How costly and condition-dependent is the production of various seminal fluid components, and how does seminal fluid quality relate to other aspects of male mate quality, such as genetic quality and sperm quality?

Are females able to assess semen quality in nonresource-based systems and, if so, what are the key phenotypic signals? Are males able to assess the semen quality of a female's previous mates?

How important is parental investment (i.e., investment in the quality of a male's own offspring) versus mating investment (i.e., investment in securing fertilisations) in the evolution of seminal fluid components?

Spotlight

Causality and the Levels of Selection

D.B. Krupp[1,2,*,@]

When is it sensible to say that group selection has shaped organismal design? This question has prompted many replies but few credible solutions. New work that exposes the causal relationships between phenotypes and fitness may finally settle the matter – and a few other things besides.

Despite its considerable age, group selection remains a wooly concept. Historically, it has been defined as heritable variance in a phenotypic character that causes variance in group fitness [1,2], but it has also been bound up with notions of frequency dependence, emergence, and the appearance of group functionality (e.g., [3–5]). Consequently, there is an idiosyncratic quality to the literature.

Levels-of-selection arguments are often made rigorous with statistical partitions of total evolutionary change. Multi-level selection approaches decompose this change into within- and between-group components, whereas individual selection approaches decompose it into actor and partner components (in which there can be more than one partner). However, both ultimately rely on the same joint distribution of phenotypes and fitness, and thus make identical predictions about the direction of selection [6].

Some have taken this to mean that the choice of decomposition is a matter of preference. In a new paper, however, Okasha [7] argues that this position mistakes predictive for causal equivalence: individual and multi-level decompositions might be correlated, but they nevertheless assume different causal relationships between phenotypes and fitness. Thus, there is a 'correct' decomposition, and it is the one that accurately characterizes the causal structure of selection – whether phenotypes directly affect individual fitness, group fitness, or both.

Okasha [7] formalizes this 'causality condition' with the methodology of path diagrams or causal graphs [8], wherein arrows link causes – such as the individual actor (z), partner (z'), or group (Z) phenotype – to their effects – such as actor (w) or group (W) fitness. A causal path that runs from $z \rightarrow w \rightarrow W$ (Figure 1A) represents a case of individual selection because the individual phenotype (say, playing a particular strategy) directly causes individual fitness and only indirectly causes group fitness. Alternatively, a path that runs from $Z \rightarrow W \rightarrow w$ (Figure 1B) represents a case of group selection because the group phenotype (say, the frequency of a strategy in the group) directly causes group fitness and only indirectly causes individual fitness. And the combination of these paths (Figure 1C) represents a case of multi-level selection.

Some measures of group fitness can depend, in a metaphysical sense, on individual fitness. For instance, one can simply tote up the fitness of each individual in the group to arrive at that group's fitness. But when does individual fitness depend on group fitness? Okasha [7] suggests that the answer lies in the ability of individuals to survive and reproduce independently: if some component of fitness can only be obtained via the group's survival or reproduction, then group fitness determines individual fitness in that component. For instance, meiotic drive produces (i) individual selection when one allele distorts segregation at the expense of rival alleles at the same locus and (ii) group selection when distortion at this locus affects the survival or reproduction of the body that bears it.

Although Okasha [7] limits his analysis of individual selection to the effects of individual phenotypes, we can extend it to demystify other concepts that have an air of 'groupness' about them, including those mentioned earlier: frequency dependence, emergence, and apparent group functionality. Consider two problem cases of frequency dependence in which individuals A and B play either strategy x or y in groups of two. In the first case [2,3], individual fitness is represented by the additive game matrix $\begin{bmatrix} 1,1 & 2,0 \\ 0,2 & 1,1 \end{bmatrix}$, where A plays x (top row) or y (bottom row), B plays x (left column) or y (right column), and payoffs take the form (A,B). The matrix shows that the actor's fitness depends on both her own and her partner's strategy, and that the payoff to each group is the same: $W_{xx} = W_{xy} = W_{yy} = 2$. This combination of frequency dependence and soft selection has been called group selection [3], but – on the historical definition of group selection, at any rate – it cannot be, because there is no variance in group fitness [2]. It is instead a case of a group phenotype directly affecting individual fitness. This traces the path $Z \rightarrow w$ in Figure 1D, and thus should be understood as individual selection.

The second case is the synergistic game $\begin{bmatrix} 2,2 & -1,2 \\ 2,-1 & 0,0 \end{bmatrix}$. The actor's payoff again depends on both her own and her partner's strategy, but group fitness varies: $W_{xx} = 4$, $W_{xy} = 1$, and $W_{yy} = 0$. Hence, there is now a reason to consider the relationship between group phenotype and group fitness. But this, as we have seen, requires information about causal structure. If the individuals A and B survive and reproduce via the group (e.g., they are two alleles at the same locus), then the group phenotype has a direct effect on group fitness, tracing the path $Z \rightarrow W$ in Figure 1C, and the interaction is subject to multi-level selection. If, however, A and B are independent organisms, then the group phenotype has a direct effect on individual fitness – like the previous case, tracing the path $Z \rightarrow w$ in Figure 1D – and thus counts as an instance of individual selection.

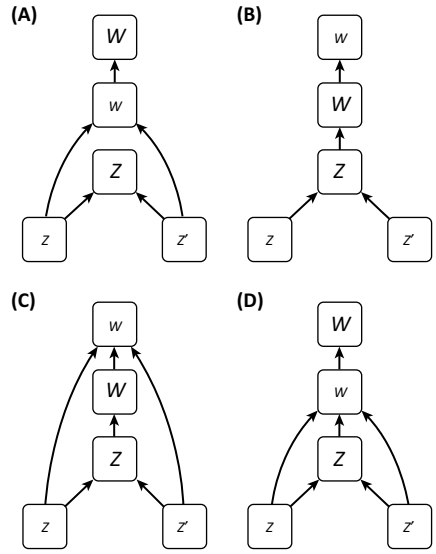

Trends in Ecology & Evolution

Figure 1. Causal Graphs of Natural Selection. Arrows denote the cause–effect relationships among actor phenotype z, partner phenotype z', group phenotype Z, individual fitness w, and group fitness W. The absence of an arrow between two variables indicates the lack of a direct causal relationship between them, although they might still be correlated. Graphs represent (A) individual selection, (B) group selection, (C) multi-level selection, and (D) individual selection under frequency dependence.

These cases show that both additive and synergistic group phenotypes can have 'emergent' – that is, causal – effects on

individual fitness; thus, group phenotype and group selection are orthogonal concepts. Consequently, phenotypes that appear to be functional for groups might in fact be individual-level adaptations for social living [1], presenting a challenge to empirical research. For instance, a recent experiment manipulated the ratio of 'docile' to 'aggressive' individuals, a group phenotype, in colonies of the social spider *Anelosimus studiosus* [9]. The design did not, however, ensure that this phenotype directly caused group rather than individual fitness. If it instead directly affected individual fitness, then an individual selection account is the proper choice (e.g., [10]).

Okasha's causality condition offers the same lesson as the popular admonition 'correlation does not imply causation'. Certainly, a statistical association between group phenotype and group fitness is necessary for group selection. Nevertheless, it is insufficient. We also require evidence that the group phenotype directly affects group fitness – something that cannot be taken for granted.

Acknowledgments

I am grateful to Martin Daly, Andy Gardner, James Marshall, Samir Okasha, and Peter Taylor for comments and discussion.

[1]Program in Evolution and Governance, One Earth Future Foundation, 525 Zang St, Broomfield, CO 80021, USA
[2]SALT Lab, Department of Psychology and Department of Mathematics and Statistics, Queen's University, Kingston, Ontario K7L 3N6, Canada

*Correspondence: dbkrupp@saltlab.org (D.B. Krupp).
@Twitter: @thesaltlab

http://dx.doi.org/10.1016/j.tree.2016.01.008

References

1. Williams, G.C. (1966) *Adaptation and Natural Selection,* Princeton University Press
2. Okasha, S. (2006) *Evolution and the Levels of Selection,* Oxford University Press
3. Goodnight, C.J. *et al.* (1992) Contextual analysis of models of group selection, soft selection, hard selection, and the evolution of altruism. *Am. Nat.* 140, 743–761
4. Smaldino, P.E. (2014) The cultural evolution of emergent group-level traits. *Behav. Brain Sci.* 37, 243–254
5. Wilson, D.S. (2015) *Does Altruism Exist? Culture, Genes, and the Welfare of Others.* Yale University Press
6. Marshall, J.A.R. (2011) Group selection and kin selection: formally equivalent approaches. *Trends Ecol. Evol.* 26, 325–332
7. Okasha, S. (2015) The relation between kin and multilevel selection: an approach using causal graphs. *Br. J. Philos. Sci.* Published online January 20, 2015. http://dx.doi.org/10.1093/bjps/axu047
8. Pearl, J. (2009) *Causality,* Cambridge University Press
9. Pruitt, J.N. and Goodnight, C.J. (2014) Site-specific group selection drives locally adapted group compositions. *Nature* 514, 359–362
10. Smallegange, I.M. and Egas, M. (2015) Good for the group? Explaining apparent group-level adaptation. *Trends Ecol. Evol.* 30, 379–381

Book Review

A Conservation Odyssey

Tim Caro[1,*]

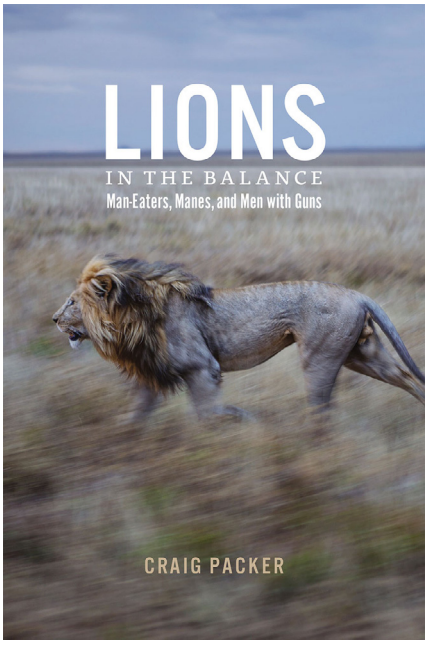

Herein lies the story of Craig Packer's struggle to save lions in the wild. We learn the names and personalities of politicians and decision makers on the international stage and in Tanzania. We gain insights about the hunting industry, especially officials in the Wildlife Division, which oversees hunting in Tanzania, about Safari Club International, about corruption in Tanzania, and about the author himself. There is a lot of science here, too, concerning the function of lion manes, how field experiments are conducted, and why lions become man-eaters. The book is engaging, candid, and thought provoking but in the end an essay in failure. Readers will differ enormously in whom to blame for this conservation debacle – but this will, for some, make the book a page-turner!

There are many important questions running through this book. (i) In developing countries where most biodiversity is found there can be tension between giving money to important conservation programs and feathering the nest of corrupt officials. *Lions in the Balance* addresses this issue in Tanzania where wildlife and wild places are found in a nation that is poor, hierarchically structured, and conservative, making it challenging to influence conservation policies in a meaningful way [1]. (ii) Is it better to work locally (there in regard to Maasai–lion conflict or to man-eating lions in southeast Tanzania) or internationally? Packer and his students have worked at both levels but have found it difficult to achieve success in either arena. (iii) The hunting industry is important for wildlife conservation in Tanzania and some other African countries because much land is set aside for hunting large mammals. However, the industry is secretive, sometimes corrupt, and ultimately driven by market forces. It is in desperate need of reform because many hunting areas have been overexploited or suffer from poaching and so no longer protect wildlife effectively. How should conservationists work with these important conservation players? (iv) What is the best way to protect wildlife from people and vice versa? Fencing is one option but is costly, open to misuse, and works for some species but not for others living in the same ecosystem. It challenges the whole idea of wilderness; so what to do? (v) What skills do conservationists require? Many field biologists have turned their attention to conservation issues in the past 20 years but the skill sets are different: Packer is a superb scientist but, by his own admission, a less-than-subtle conservation politician. Some people can walk the science walk and talk the conservation talk, but very few. (vi) Aid organizations live in a bubble