MR WALKER

CONTENTS:

DESCRIPTION

MR WALKER is a walking robot with waving arms and glowing eyes. The walking motion is achieved by cams and linkages and uses an easily constructed motor and gearbox assembly.

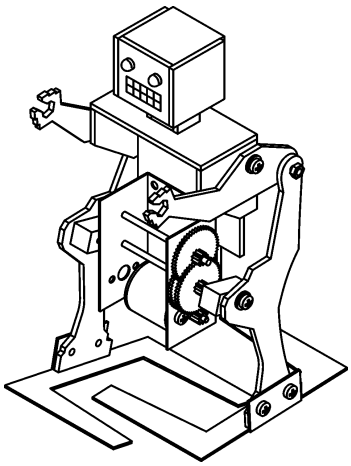

SECTION 1: GENERAL AND PLANNING INFORMATION

1. DESIGN CONSIDERATIONS

1.1 GENERAL

The following are some of the ideas you will need to consider in your planning:

- MR WALKER consists of a "body", on which the driving components (motor and gearbox) are mounted, and it has an arm and a leg on each side.
- Decide on the material to be used for the body parts. The material used to make the prototype MR WALKER body was 3mm plywood, which is quite suitable due to its lightness. You could use other materials, although the use of acrylic plastic is not advised due to its brittle properties - it will crack and break if used with self-tapping screws.
- Consider how to connect the wiring from the battery and switch to MR WALKER's LED eyes. If you plan to run the wires to the eyes through the neck you need to drill holes in the base of the head and in the body for this. 4mm holes should work, and should be drilled before you start assembly.
- The drawings in this unit are meant as a guide only, and allow students to individualise their MR WALKER.
- The length of the 2 gearbox shafts needs to be worked out: (1) the shorter shaft is the width of the gear case plus 2 pinion gears, and (2) the output shaft's length is determined by the width of the body and the thickness and location of the cams.
- Drill 2.3mm holes for the 2.6mm self-tapping screws and 3.5mm clearance holes for the M3 bolts.

1.2 ITEMS FOR INVESTIGATION

This project provides a number of different areas that could be investigated. Some ideas are:

- How does a cam work?
- What types of linkages are used to achieve MR WALKER movement?
- What other sorts of linkages are there? Could they be used for this device, and how?
- How does the gearbox reduce the output speed of the motor?
- If the motor turns at 5000 rpm, what is the gearbox's speed at the output shaft, at the selected reduction ratio?
- How does a LED work and what voltage does a Red LED need to operate?
- What are the terms Anode and Cathode used to describe?
- Evaluate the suitability of various materials, for the various body and mechanism parts. For example: Aluminium, PVC and Perspex.

SECTION 2: COMPONENTS & MATERIAL REQUIRED

2.1 COMPONENTS SUPPLIED

The following components are supplied in the kit:

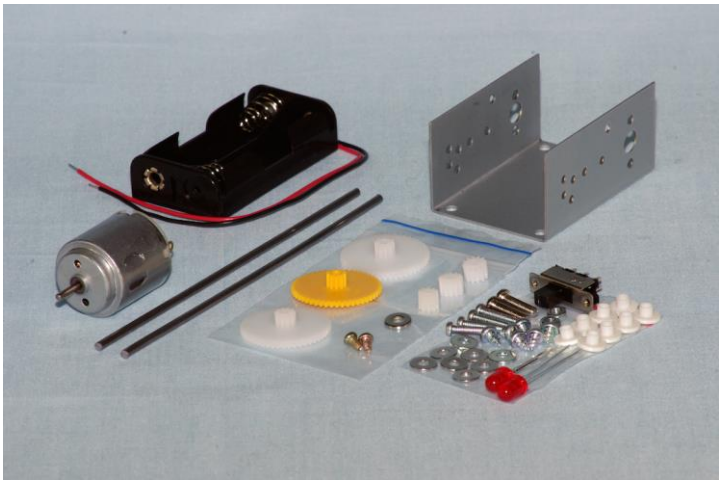

2.2 ADDITIONAL REQUIREMENTS

The following items are required and are available from Scorpio Technology:

- Battery – AA, 2 required (BATTAA)
- Drill Bit – 2.3mm (DB2.3)
- Drill Bit – 3.5mm (DB3.5)

The following material is to be supplied by the student / designer:

- Material for the components (PVC or acrylic sheet, plywood, etc.) We used: 2 pieces of 20mm x 12 mm x 6mm thick PVC (for the cams); 1mm thick aluminium or steel sheet (for the feet - aluminium is easier to cut and bend and is lighter than steel); 3mm thick plywood or PVC (other body parts).
- NOTE: Plastic materials can be purchased from plastics suppliers (in the Yellow Pages under the heading "Plastics Fabricators" or search the Internet.)

2.3 TOOLS REQUIRED

The following tools are required:

- Assorted hand tools
- Soldering equipment and solder

- Drill bit – 2.0mm
- Drill bit – 4.0mm
- Drill bit – 5.0mm

SECTION 3: ASSEMBLING THE GEARBOX AND MOTOR

The MULTI-RATIO GEARBOX kit provides a choice of 3 gear ratios to choose from. However, MR WALKER must use the Triple-reduction version of this gearbox.

NOTE: Take care when assembling the gearbox, to assemble the gears to the correct side, as the supplied motor only fits on one side of the gear case.

3.1 GEARBOX AND MOTOR SPECIFICATIONS

GEARBOX STAGE / Reduction ratio	OUTPUT SHAFT	RATIO	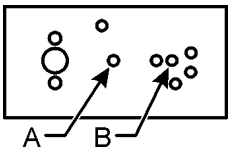
Triple reduction	Hole A	1:125	
ELECTRIC MOTOR - Rated at 4.5V	Performance		
3 Volts: i.e. Powered by 2xAA batteries	6,500 rpm ##		
6 Volts: i.e. Powered by 4xAA batteries	12,600 rpm ##		
Torque	17.9 g.cm		

Motor speeds quoted are approximate rpms under load.

WARNING: Using a higher voltage increases the speed of the motor, but will reduce the life of the motor.

3.2 ASSEMBLING THE GEARBOX

3.2.1. GENERAL

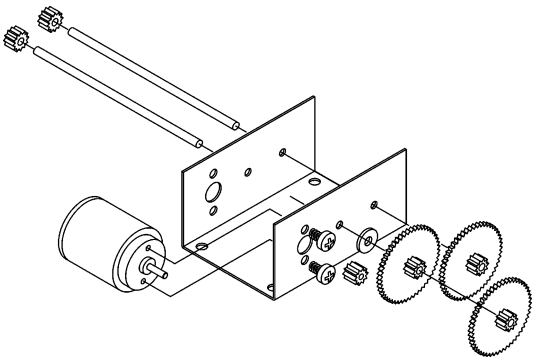

- For this Gearbox, the holes marked 'A' & 'B' in the drawings are to be used - the available gears will not function if fitted to any other holes.
- The 10T pinion gear (which has a 1.9mm hole) is press fit on to the electric motor's 2.0mm shaft.
- The 12T pinion gears are used as locators.
- The white spur and 12T pinion gears (which have a 2.4mm hole) are press fit on to the 2.5mm shafts while the yellow spur gear is free wheeling on the shaft and has a 2.6 diameter hole.
- The outside two 50T spur gears (i.e. one on each shaft) must be white 50T gears, and are press fit, while the inner (closer to the case) is a yellow 50T, which is free spinning.
- The gears can be assembled onto the shaft/s with a help of small hammer, or using the jig or assembly aid shown below.

3.2.2. ASSEMBLY PROCEDURE

Assemble the steel rods, and all the gears, to the gear case - as shown in the drawing of the Triple reduction gearbox. Also refer to the exploded diagram.

- Start by fitting the first shaft to the hole nearest the motor (Hole A).
- Add the 12T pinion gear (locator), with the 1.0mm washer between the case and one (yellow) 50T spur gear.
- Add the second shaft to hole B, and add the 12T pinion gear (locator) and one (white) 50T spur gear.
- Install a (white) 50T spur gear on the shaft nearest the motor. For the THIRD reduction ratio, this shaft is the output shaft.

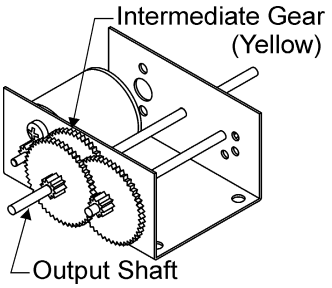

TRIPLE REDUCTION

(High ratio = low output shaft speed)

3.2.3. ASSEMBLY HINTS AND TOOLS

The following will aid your assembly work.

For pushing the gears along the shaft, the following tool should be constructed. The tool on the right is used with the drill press. The tool shown on the left is used (gently) with the hammer.

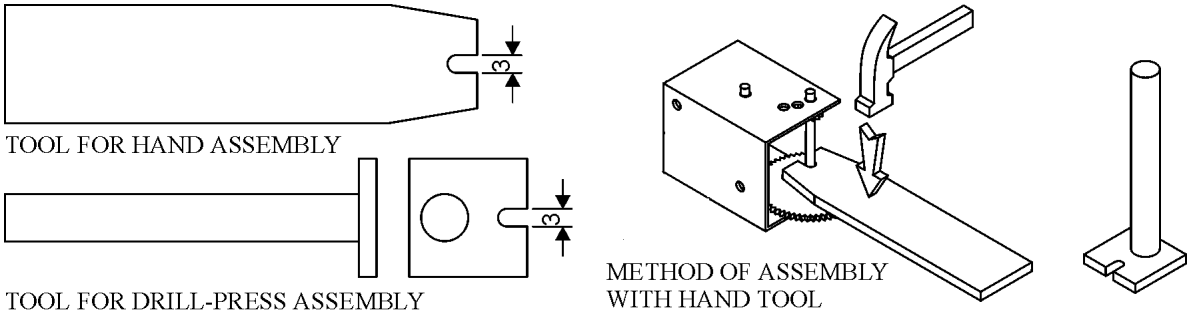

As a jig, a piece of hardwood 40x60x150, with 3.0 dia. holes drilled to varying depths is useful.

Further, when the shaft starts to penetrate through the gear, a 1 mm thick plastic sheet can be placed, temporarily, between the gear and case to prevent damage.

3.2.4. GEARBOX JIG

You don't need to make a jig to assemble the gearbox, but it makes it easier to assemble the gearbox. Depending on the number of students, you might want to make more than one Jig.

- The jig can be made from a piece of scrap wood approximately 170mm x 50mm x 18mm.
- The jig has two 3mm holes drilled all the way through. One hole as shown is recessed using a 6mm drill. The other 3mm hole has the section between the hole and the end of the wood cut out.

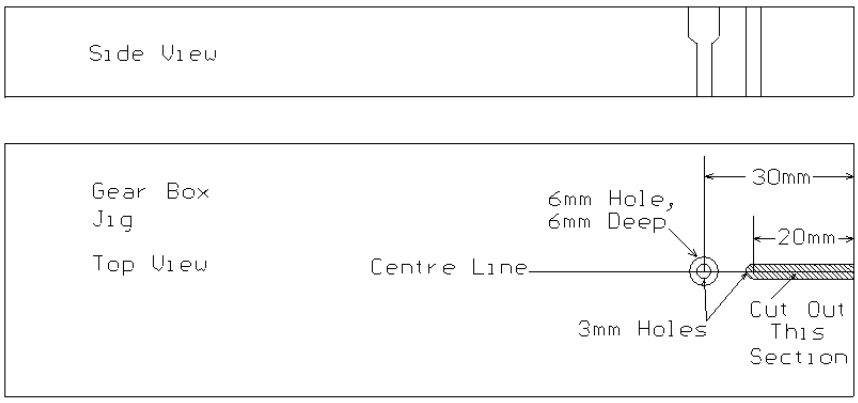

- The recessed hole and cut out allow the gears to be fitted to the steel rod more easily than would otherwise be possible.

- The jig's other end can be held in the vice, or you could use a G-Clamp to secure it to a table or bench top.

3.2.5. ASSEMBLING THE MOTOR

- Press the 10T pinion onto the motor shaft. Stop when the pinion gear is 3mm from the motor's body.

HINT: Place the gear on the bench, insert the motor shaft into the pinion gear's hole and gently tap the end of the shaft (where it exits the motor) with a small hammer.

WARNING: Don't just push the motor down by hand, as this can push the motor armature out of its bearings and jam the motor.

- Secure the motor to the gearbox case using the two self-tapping screws.
- Solder a suitable length of wire to each of the motor's terminals. The length will be determined by the location of the gearbox and the other components.

SECTION 4: MAKING AND ASSEMBLING THE BODY

4.1 MAKING THE BODY PARTS

- Begin by marking out the pieces of MR WALKER's body. The drawings at the end of this unit give the required measurements, and, if more than one piece is required, that is also marked on the drawing.
- Take care to accurately mark out the hole positions to be drilled. Holes not accurately marked and drilled may cause the arms and legs to lock-up during operation.
- Make sure that you also draw the dotted lines shown on the top and side sections of MR WALKER's body. These lines will be used when you begin to glue MR WALKER's body together.
- Carefully cut out the shapes required. Drill all the required holes and lightly sand to remove rough edges.
- Mark out the aluminium for the feet. Drill the 3mm holes and use a pair of tinsnips or a nibbling tool to cut the feet. You will need to use a fine file to remove any burrs or sharp edges.

4.2 ASSEMBLING MR WALKER's BODY

The exploded drawing will assist in guiding you in the assembly of MR WALKER's various parts.

NOTE: A hot glue gun is useful for joining the body parts and pieces. Alternatively, select a suitable adhesive. When gluing parts together, apply the glue, press the two pieces together and hold in place while the glue cools (if using a hot glue gun) or dries.

WARNING: If you have not used a hot glue gun before, it is really important to be careful as hot glue on your skin is a very painful experience. If you do get some on your skin, go immediately to a cold water tap and flush the area with cold running water for at least 10 minutes.

- Begin by applying a bead of glue along the dotted line marked on one of the side pieces. Put the top section of the side piece (near the hole) against the bench top.

Put the top edge of the back on the bench top. Press the two pieces together where the dotted line is marked on the side piece. When the glue has dried, repeat the process for the other side.

- Place a bead of glue along the tops of both sides and the back. With the top piece on the bench place the sides and back down onto the top piece. The back piece should be positioned along the dotted line on the top piece and the sides should sit flush with the outside edges of the top piece.
- Connect the wiring from the battery and the switch to the LED eyes.
- Use the same procedures to glue up the neck and head. Glue them as neatly as possible. Glue the neck to the head and when cool, glue the neck and head to the body.

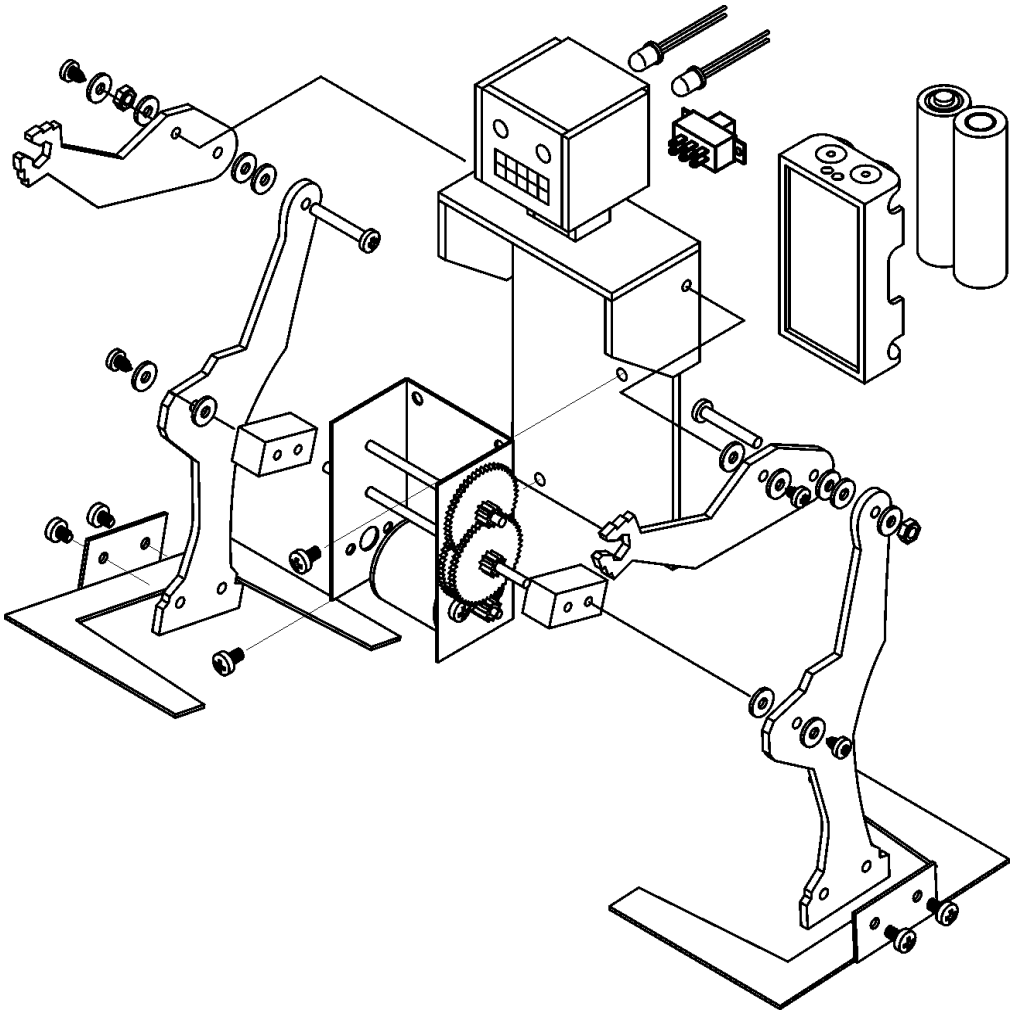

- Mark out and drill the two 2.3mm holes in each of the 6mm PVC cams. Place one cam on the bench top, de-burr the end of the gearbox shaft and put one of the shaft ends into a cam hole. Carefully tap the other end of the shaft with a hammer until the shaft is flush with the other side of the cam. Place the second cam onto the bench top. Pay attention to the direction, so that the cam already on the shaft, is facing. The second cam must face 180° from the first cam (i.e. in the opposite direction - refer to the exploded diagram for assistance).
- Insert the nylon bushes into the 4mm holes in the legs. Ensure that the flange is on the inside of each leg. Place nylon bushes into the arm's pivot holes, with the flange on the inside of each arm. Place nylon bushes into the remaining holes in the arms, this time with the flange facing to the arm's outside.
- Use a washer and 2.6mmx12mm self-tapping screw, to fix each arm to the body. Make sure that the self tappers are snug, but not tight and that the arms can move freely.

- Use two 2.6mmx12mm self-tapping screws and washers to fix the legs to the PVC cams, again snugly but not tight, to allow movement.
- Use two M3x12mm Bolts and four washers to fix the arms and legs together, with the nuts on the outside. Once again tighten snugly but so they can move freely. You can do a simple test, by rotating the pinion gear on the motor shaft end by hand. The arms and legs should move freely.

HINT: Put a small amount of nail polish or hot glue on the end of the bolt and nut. This will prevent the nut undoing during operation.

HINT: if you want MR WALKER to walk in circles, you can bend both ends of one foot upwards (a little bit).

SECTION 5: WIRING UP MR WALKER

5.1 BATTERY HOLDER

- Attach the battery pack onto the back of MR WALKER's body (using glue or double sided tape), with the wires from the battery holder at the top.
- Drill a 4mm hole in the back, to enable wires to be connected through to the motor.

NOTE: You may need to roughen up the surface of the battery holder with some sandpaper to enable the glue to stick to the battery holder.

5.2 CONNECTING THE LEDs

If you drilled holes in the head and body earlier, then now is the time to feed the two wires through the holes and wire up the switch and LED's as shown in the diagram below.

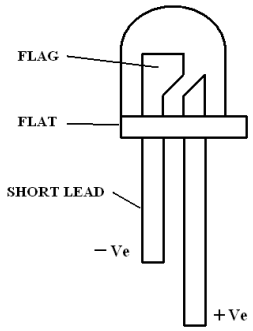

5.2.1. IDENTIFYING A LED's NEGATIVE LEAD

LEDs have a positive (Anode) and negative (Cathode) lead and may use one or more methods to identify the negative lead. These are shown in the diagram.

The methods are:

- The flag (the larger connection inside the body) identifies the negative lead. This is visible when the LED is held up to the light. Most types of LEDs use this method.
- The shortest leg is negative.
- A flat on the ridge around the base of the LED is on the negative side.

5.1 WIRING UP THE MOTOR AND SWITCH

- The switch should be wired as shown in the "Wiring Diagram"
- Connect the other ends of the two wires to the motor's terminals. If MR WALKER moves forward, solder the wires to the terminals. If it goes in reverse, swap the wires and then solder them.

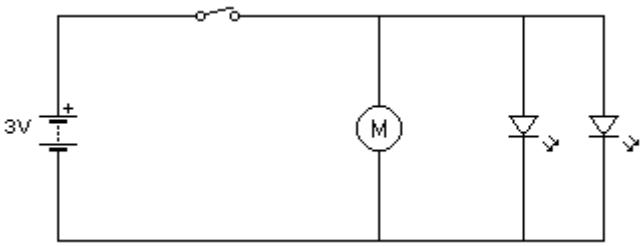

CIRCUIT DIAGRAM

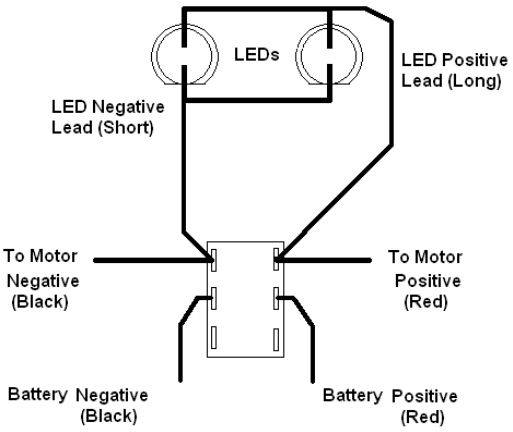

WIRING DIAGRAM

SECTION 6: ELECTRICAL TESTING AND TROUBLE SHOOTING

6.1 TESTING

- Put two 1.5 Volt AA batteries into the battery holder and place MR WALKER on a smooth flat surface. Turn on the switch and watch your very own robot walk for the first time.
- If, while testing MR WALKER, he doesn't do any of what he is expected to do (i.e. walk, move his arms and have 2 glowing red eyes), switch it off immediately.

6.2 TROUBLE SHOOTING

If nothing happened:

- Check that the batteries are properly inserted in the battery holder.
- Check the battery voltage. If low, replace the batteries.
- Check the wiring against the wiring diagram.
- Check that there are no short circuits or solder bridges between wires
- Check that bare wire ends do not touch

If MR WALKER walked but the LED didn't light up:

- The LEDs have been connected in reverse. Check the wiring against the wiring diagram. Negative (Black) to the short leads on the LEDs and Positive to the long leads.

If the batteries getting hot:

- Check that there are no short circuits or solder bridges between the wires.
- If all is correct the LEDs may be faulty and will need to be replaced (although this is unlikely)

If only one red LED glows:

- The LED that does not glow is connected in reverse. If after checking it is wired in the correct direction, then the LED is faulty and should be replaced.

If the arms and legs move but then stop, this indicates that the arms or legs have jammed:

- This has probably been caused by incorrect spacing of the holes in either or both the arms and legs or some of the screws or bolts has been tightened too much.
- If either of these happens, the batteries and motor will get hot. Turn off immediately to avoid damage to the motor.

- Use your finger and move the pinion gear on the end of the motor shaft to see if you can work out where and why they are not moving properly.

SECTION 7: BODY DRAWINGS

These drawings provide the basic ARM and LEG patterns for your own design.

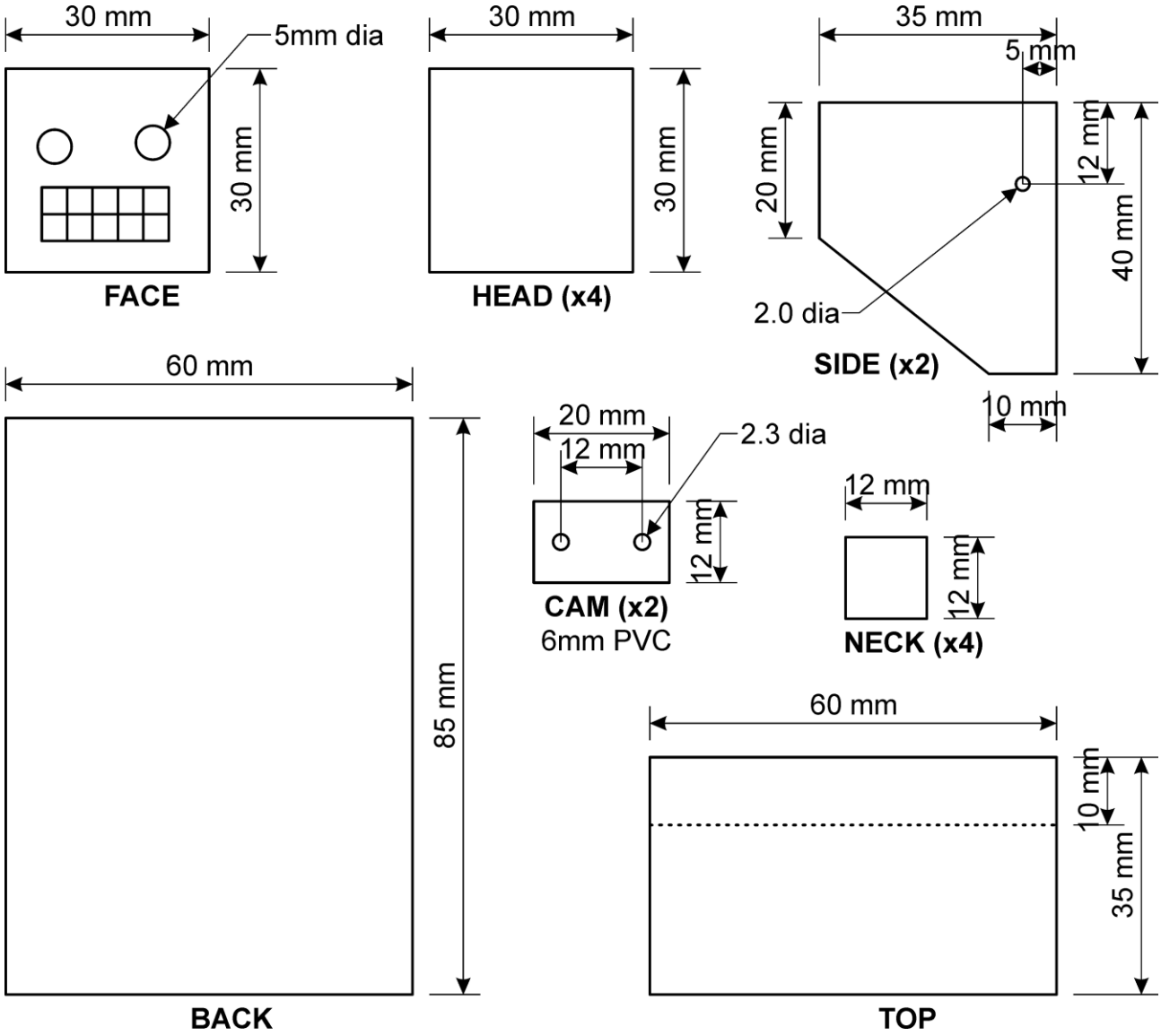

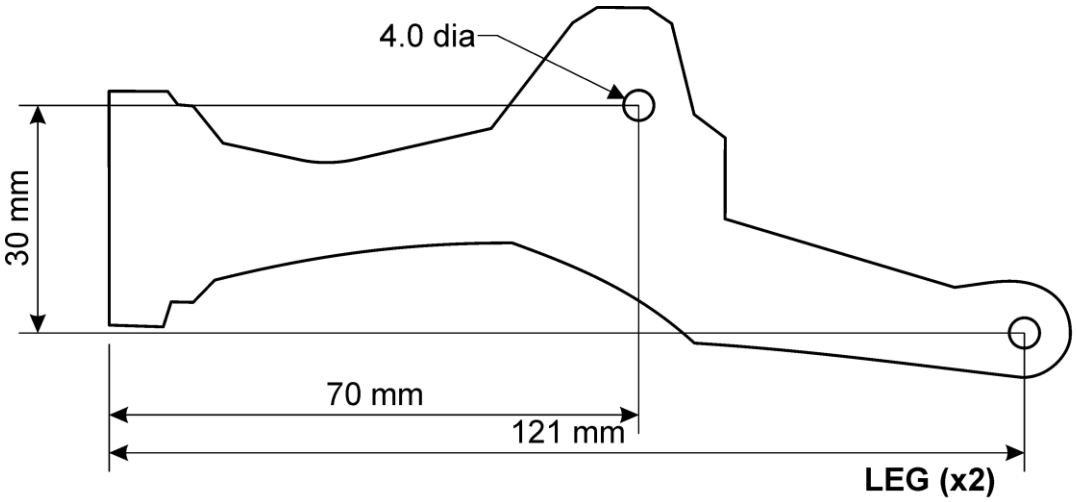

LEG (x2)

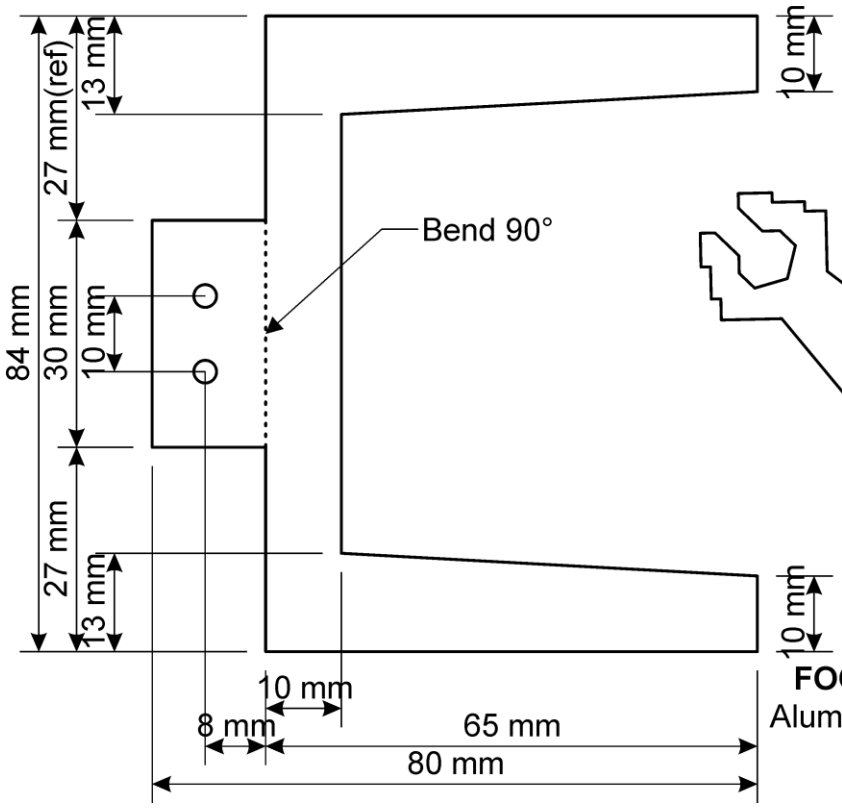

FOOT (x2)
Aluminium 1mm

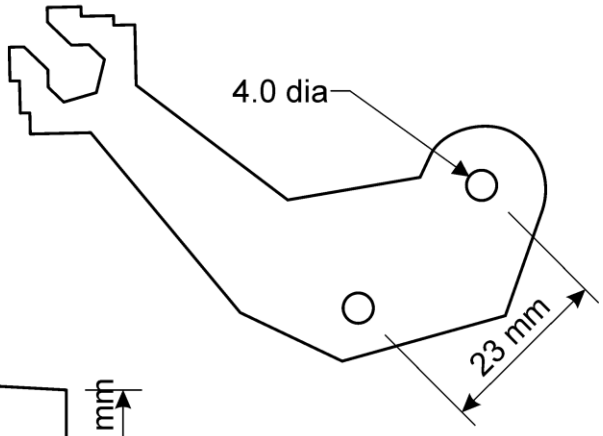

ARM (x2)