GENERAL NOTES

1. THE CONTRACTOR SHALL VISIT PROJECT SITE PRIOR TO BIDDING. VERIFY ALL EXISTING CONDITIONS AT THE PROJECT SITE. FIELD VERIFY ALL DIMENSIONS PRIOR TO FABRICATIONS OR ORDERING OF ANY ITEMS. VERIFY ALL WORK TO BE DONE WITH THE OWNER PRIOR TO CONSTRUCTION. VERIFY WHICH ITEMS, FIXTURES, OR APPLIANCES SHALL BE SUPPLIED OR RE-USED BY THE OWNER AND THE EXACT LOCATION OF SAID ITEMS.
2. THE CONTRACTOR SHALL TAKE CARE DURING DEMOLITION AND CONSTRUCTION NOT TO DAMAGE ANY EXISTING CONSTRUCTION AND PLANTING WHICH IS TO REMAIN. ANY DAMAGE OF EXISTING CONDITIONS SHALL BE REPLACED AT NO COST TO OWNER.
3. ALL MATERIALS TO BE REMOVED SHALL BE DISPOSED OF AT AN APPROPRIATE LOCATION AWAY FROM THE SITE.
4. ALL WORK SHALL BE PERFORMED SO THAT THERE SHALL BE MINIMUM INTERFERENCE WITH OTHER TENANTS AND NEIGHBORS.
5. PROVIDE ALL NECESSARY TEMPORARY SUPPORTS, SHORING AND BRACING REQUIRED DURING CONSTRUCTION. CONTRACTOR SHALL BE RESPONSIBLE MAINTAINING STRUCTURAL INTEGRITY AT ALL TIMES.
6. PATCH ALL FLOORS, WALLS, AND CEILINGS AS REQUIRED IN ALL AREAS WHERE REMODELING IS OCCURRING. MATCH EXISTING FINISH MATERIALS, TEXTURES, AND FINISHES UNLESS OTHERWISE NOTED.
7. NEW WALLS, CEILINGS, FLOORS INTERSECTING EXISTING WALLS, CEILINGS, AND FLOORS SHALL BE FLUSH, CLEAN AND LEVEL. ALL TIE-INS SHALL BE ADEQUATELY SECURE FOR STRUCTURAL INTEGRITY AND SAFETY.
8. ANY GLAZING REPLACED FOR RECONSTRUCTION OR TENANT IMPROVEMENTS LOCATED WITHIN 24" OF DOORS OR WITHIN 18" OF FLOOR SHALL BE TEMPERED GLAZING.
9. CLEAN UP AND REMOVE FROM SITE ALL DEBRIS AND WASTE MATERIALS CREATED BY DEMOLITION AND CONSTRUCTION.
10. PROVIDE CASING BEADS AT ALL EXPOSED DRYWALL EDGES. PROVIDE ALL OTHER MISC METAL TRIM AS REQUIRED. FOR A COMPLETE AND PROPER INSTALLATION.
11. ALL EXTERIOR BUSINESS SIGNAGE REQUIRES A SEPARATE PERMIT.
12. THESE PLANS ARE FOR GENERAL CONSTRUCTION PURPOSES ONLY. THEY ARE NOT EXHAUSTIVELY DETAILED NOR FULLY SPECIFIED. IT IS THE RESPONSIBILITY OF THE OF THE CONTRACTOR TO SELECT, VERIFY, RESOLVE AND INSTALL ALL MATERIALS AND EQUIPMENT.
13. CONTRACTOR SHALL USE WRITTEN DIMENSIONS ONLY. ALL DIMENSIONS ARE TO FACE OF STUDS U.O.N.

19 GENERAL NOTES

SYMBOLS

Symbol	Description
DETAIL "CUT" (1 / A8.1)	DETAIL NUMBER; DIRECTION OF VIEW/EXTENT; SHEET NUMBER WHERE DETAIL IS DRAWN.
SECTION "CUT" (10 / A6.1)	DIRECTION OF VIEW; LOCATION ON SHEET; SHEET NUMBER WHERE SECTION IS DRAWN.
ROOM TAG (OFFICE / 103)	NAME OF ROOM; ROOM NUMBER
WINDOW TAG (A)	WINDOW TYPE -REFER TO WINDOW SCHEDULE
NORTH ARROW (NORTH)	INDICATES REFERENCE NORTH
ELEVATION DATUM (DATUM)	INDICATES ELEVATION HEIGHT; INDICATES LINE OF HEIGHT
DOOR TAG (101.1)	INDICATES ROOM WITCH DOOR IS LOCATED; INDICATES DOOR NUMBER -REFER TO DOOR SCHEDULE
INTERIOR ELEVATION TAG (1, 2, 3, 4; 5 / A6.1)	DIRECTION OF VIEW; NUMBER OF VIEW; ELEVATION NOS; SHEET NUMBER WHERE SECTION IS DRAWN.
LEGEND TAG (1)	DESIGNATES LEGEND NOS -SEE LEGEND DESCRIPTION

17 SYMBOLS

ABBREVIATIONS

&	AND
∠	ANGLE
@	AT
x	BY
ø	DIAMETER OR ROUND
(E)	EXISTING
(N)	NEW
d	PENNY (NAIL)
%	PERCENT
#	POUND OR NUMBER
A.B.	ANCHOR BOLT
ABV.	ABOVE
A/C	AIR CONDITIONING
A.C.	ASPHALT CONCRETE
ADJ.	ADJUSTABLE
A.F.F.	ABOVE FINISHED FLOOR
AGG.	AGGREGATE
AL.	ALUMINUM
ALT.	ALTERNATE
ANOD.	ANODIZED
APPROX.	APPROXIMATE
ARCH.	ARCHITECTURAL
BD.	BOARD
BLDG.	BUILDING
BLK.	BLOCK
BLKG.	BLOCKING
BM.	BEAM
B.M.	BENCHMARK
B.O.C.	BACK OF CURB
BOT.	BOTTOM
BTWN.	BETWEEN
BUR.	BUILT UP ROOFING
B.W.	BACK OF WALK
CAB.	CABINET
C.B.	CATCH BASIN
C.D.	CONDENSATE
CEF.	CEILING EXHAUST FAN
CEM.	CEMENT
C&G.	CURB & GUTTER
C.I.	CAST IRON
C.I.P.	CAST IN PLACE
C.J.	CONSTRUCTION JOINT
C.L.	CENTER LINE
CLG.	CEILING
CLR.	CLEAR/CLEARANCE
C.M.U.	CONCRETE MASONRY UNIT
CNTR.	COUNTER
C.O.	CLEANOUT
COL.	COLUMN
COM.	COMMUNICATION
CONC.	CONCRETE
COND.	CONDITION
CONN.	CONNECTION
CONST.	CONSTRUCTION
CONT.	CONTINUOUS
CONTR.	CONTRACTOR
COORD.	COORDINATE
CORR.	CORRIDOR
CPT.	CARPET
CR.	CEILING RETURN
CS.	CEILING SUPPLY
CTR.	CENTER
C.W.	COLD WATER
CWR.	COLD WATER RETURN
DBL.	DOUBLE
DEG.	DEGREE
DEPT.	DEPARTMENT
DET.	DETAIL
D.F.	DOUGLAS FIR
DIA.	DIAMETER
DIAG.	DIAGONAL
DIM.	DIMENSION
DISP.	DISPOSAL
DIV.	DIVISION
DN.	DOWN
DP.	DEEP
DR.	DOOR
D.S.	DOWNSPOUT
D.W.	DISHWASHER
DWG.	DRAWING
E.	EAST
EA.	EACH
E.F.	EXHAUST FAN
E.G.	EXISTING GRADE (GROUND)
E.J.	EXPANSION JOINT
ELEC.	ELECTRIC
EL./ELEV.	ELEVATION
ENCL.	ENCLOSURE
ENT.	ENTRANCE
E.P.	EDGE OF PAVEMENT
EQ.	EQUAL
EQUIP.	EQUIPMENT
EST.	ESTIMATE
ETC.	ET CETERA
EXP.	EXPANSION
EXT.	EXTERIOR
F.D.	FLOOR DRAIN
F.E.	FIRE EXTINGUISHER
F.E.C.	FIRE EXTINGUISHER CABINET
F.F.	FINISH FLOOR
F.F.E.	FINISH FLOOR ELEVATION
F.G.	FINISH GRADE (GROUND)
F.H.	FIRE HYDRANT
FIN.	FINISH
FL.	FLOW LINE
FLASH.	FLASHING
FLEX.	FLEXIBLE
FLR.	FLOOR
FLUOR.	FLUORESCENT
FND.	FOUNDATION
F.O.B.	FACE OF BLOCK
F.O.C.	FACE OF CONCRETE
F.O.S.	FACE OF STUD
F.O.W.	FACE OF WALL
FRMG.	FRAMING
FT.	FEET/FOOT
FTG.	FOOTING
GA.	GAUGE
GAL.	GALLON
GALV.	GALVANIZED
GFI.	GROUND FAULT INTERRUPTER
GI.	GALVANIZED IRON
GL.	GLASS
G.L.B.	GLUE LAMINATED BEAM
GND.	GROUND
GOVT.	GOVERNMENT
GRD.	GRADE
GSM.	GALVANIZED SHEET METAL
GYP.	GYPSUM
HB.	HOSE BIBB
HC.	HANDICAPPED
H.C.	HOLLOW CORE
HDR.	HEADER
HDWR.	HARDWARE
HDWD.	HARDWOOD
H.M.	HOLLOW METAL
HORIZ.	HORIZONTAL
HR.	HOUR
HT.	HEIGHT
HTR.	HEATER
HVAC	HEATING, VENTILATING AND AIR CONDITIONING
H.W.	HOT WATER
I.D.	INSIDE DIAMETER/DIMENSION
IN.	INCH
INSUL.	INSULATION
INT.	INTERIOR
INV.	INVERT

JB.	JAMB
JST.	JOIST
JT.	JOINT
LAM.	LAMINATE
L.	LENGTH
LAV.	LAVATORY
LB.	POUND
L.B.	LAG BOLT
L.F.	LINEAR FEET
L.H.	LEFT HAND
LOUV.	LOUVER
LT.	LIGHT
MAT.	MATERIAL
MAX.	MAXIMUM
M.B.	MACHINE BOLT
M.C.	MEDICINE CABINET
MECH.	MECHANICAL
MED.	MEDIUM
MEMB.	MEMBRANE
MFG.	MANUFACTURER
M.H.	MANHOLE
MIN.	MINIMUM
MISC.	MISCELLANEOUS
M.O.	MASONRY OPENING
M.S.	MACHINE SCREW
MTL.	METAL
MULL.	MULLION
N.	NORTH
NFL.	NEW FLOW LINE
N.I.C.	NOT IN CONTRACT
NP.	NEW PAVEMENT
NO.	NUMBER
(N.T.S.)	NOT TO SCALE
NTW.	NEW T.O. WALK
o/	OVER (ON)
OBS.	OBSCURE
O.C.	ON CENTER
O.D.	OUTSIDE DIAMETER/DIMENSION
OF.	OVERFLOW
OPNG.	OPENING
OPT.	OPTIONAL
OZ.	OUNCE
PERF.	PERFORATED
PKT.	POCKET
PL.	PLATE
P.L.	PROPERTY LINE
PLAM	PLASTIC LAMINATE
PLAS.	PLASTIC
PLUMB.	PLUMBING
PLYWD.	PLYWOOD
PR.	PAIR
PREFAB.	PREFABRICATED
PRELIM.	PRELIMINARY
P.S.F.	POUND PER SQUARE FOOT
P.S.I.	POUND PER SQUARE INCH
PT.	POINT
P.T.D.	PAPER TOWEL DISPENSER
P.U.E.	PUBLIC UTILITY EASEMENT
P.V.C.	POLYVINYL CHLORIDE
QTR.	QUARTER
QUAN.	QUANTITY
R.A.	RETURN AIR
RAD./R.	RADIUS
R.D.	ROOF DRAIN
REF.	REFRIGERATOR
REFCLG.	REFLECTED CEILING
REF.	REFRIGERATOR
REINF.	REINFORCED
REQ.	REQUIRED
RESIL.	RESILIENT
REV.	REVISE/REVISION
R.H.	RIGHT HAND
RM.	ROOM
R.O.	ROUGH OPENING
R/W	RIGHT-OF-WAY
RWD.	REDWOOD
R.W.L.	RAINWATER LEADER
S.B.	SPLASH BLOCK
S.C.	SOLID CORE
SCH.	SCHEDULE
S.D.	STORM DRAIN
SEC.	SECTION
SEP.	SEPARATION
SHTG.	SHEATHING
SHT.	SHEET
SIM.	SIMILAR
S.M.	SHEET METAL
S.M.S.	SHEET METAL SCREW
SPEC.	SPECIFICATION
SPL.	SPLASH
SQ.	SQUARE
S.S.	SANITARY SEWER
STA.	STATION
STD.	STANDARD
STL.	STEEL
STOR.	STORAGE
STRUCT.	STRUCTURAL
SUSP.	SUSPENDED
S.V.	SHEET VINYL
SW.	SIDEWALK
T. & B.	TOP AND BOTTOM
TBR.	TO BE REMOVED
TEL./TELE.	TELEPHONE
TEMP.	TEMPERED
T. & G.	TONGUE AND GROOVE
THK.	THICK
THR.	THRESHOLD
T.O.	TOP OF
T.O.C.	TOP OF CURB
T. O.W.	TOP OF WALL
T.T.D.	TOILET TISSUE DISPENSER
T.V.	TELEVISION
TYP.	TYPICAL
U.G.	UNDERGROUND
U.L.	UNDERWRITERS LABORATORY
U.O.N.	UNLESS OTHERWISE NOTED
VENT.	VENTILATE/VENTILATION
VERT.	VERTICAL
VEST.	VESTIBULE
V.G.	VALLEY GUTTER
VOL.	VOLUME
V.T.R.	VENT THROUGH ROOF
V.W.C.	VINYL WALL COVERING
W.	WEST
W.	WIDTH (DIMENSION)
W/	WITH
W.C.	WATER CLOSET
WCO.	WALL CLEAN OUT
WD.	WOOD
W.H.	WATER HEATER
W/O	WITHOUT
W.P.	WATER PROOF
WR.	WALL RETURN (MECH)
W.R.	WATER RESISTANT
WS.	WALL SUPPLY (MECH)
W.S.	WOOD SCREW
WT.	WEIGHT
W.W.F.	WELDED WIRE FABRIC

13 ABBREVIATIONS

Center for Human Services

changing lives building futures helping families

2000 BRIGGSMORE AVENUE, SUITE I

This set of plans MUST be kept on the job at all times and it is unlawful to make any changes or alterations on same without written permission from Building Safety Division. City of Modesto.
REVIEWED FOR CODE COMPLIANCE
DEC 30 2014
By [signature] Permit No. BLD2014-63643
The stamping of this plan SHALL NOT be held to permit or to be an approval of the violation of any provisions of any Ordinance or Law. Occupancy of structure not permitted until after final approval.

MODESTO CALIFORNIA

11 PROJECT TITLE

PROJECT LOCATION

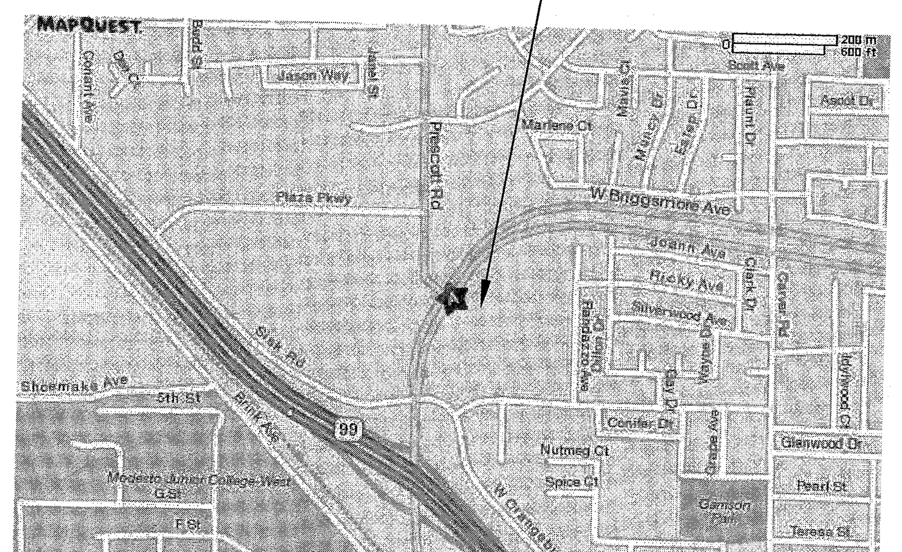

NORTH

10 VICINITY MAP NO SCALE

ARCHITECT
L-STREET ARCHITECTS, LIMITED
1414 L STREET
MODESTO, CA. 95354
OFFICE: (209) 575-1415
FAX: (209) 575-4374

STRUCTURAL ENGINEER
PELTON ENGINEERING
2813 COFFEE RD SUITE D1
MODESTO, CA. 95355
OFFICE: (209) 575-9619
FAX: (209) 575-0274

MECHANICAL DESIGN BUILD
DEHART PLUMBING,HEATING & AIR INC.
311 BITRITTO WAY
MODESTO, CA 95356
OFFICE: (209) 523-4578
FAX: (209) 523-4587

PLUMBING DESIGN BUILD
DEHART PLUMBING,HEATING & AIR INC.
311 BITRITTO WAY
MODESTO, CA 95356
OFFICE: (209) 523-4578
FAX: (209) 523-4587

ELECTRICAL DESIGN BUILD
BRITE ELECTRIC, INC.
490 S GOLDEN STATE BLVD,
TURLOCK, CA 95381
OFFICE: (209) 632-7291
FAX: (209) 632-9389

9 CONSULTANTS

FIRE PROTECTION NOTES

1. MODIFICATIONS TO THE AUTOMATIC FIRE EXTINGUISHING SYSTEM SHALL BE IN ACCORDANCE WITH NFPA 13.
2. AT THE CONCLUSION OF CONSTRUCTION, PROVIDE A FINAL MASTER DOOR KEY TO THE FACILITY FOR INCLUSION IN THE BUILDING KNOX BOX
3. TENANT IMPROVEMENTS - SPRINKLERS: ANY TENANT IMPROVEMENTS, ADDITIONS OR CHANGES TO ANY SPRINKLER SYSTEM REQUIRE MODESTO REGIONAL FIRE AUTHORITY REVIEW AND APPROVAL
4. FIRE EXTINGUISHERS: THE APPLICANT SHALL INSTALL APPROVED FIRE EXTINGUISHERS, ONE (1) PER EACH 3000 SQUARE FEET, WITH A MAXIMUM TRAVEL OF SEVENTY-FIVE FEET (75') FROM ANY POINT IN BUILDING. THESE SHOULD BE LOCATED AND APPROVED BY THE FIRE DEPARTMENT PRIOR TO BUILDING OCCUPANCY.
5. SUITE NUMBERS: SUITE NUMBERS SHALL BE INSTALLED AT FRONT AND REAR DOORS.
6. TITLE 19 REQUIREMENTS: ALL CARPETS, DECORATIONS AND PANELING SHALL COMPLY WITH TITLE 19 REQUIREMENTS. FLAME-RESISTANT CERTIFICATES SHALL BE SUBMITTED TO THE FIRE DEPARTMENT BEFORE ANY INSTALLATION REGARDING THIS DEPARTMENT.
7. ROOM CAPACITY: ANY ROOM HAVING AN OCCUPANT LOAD OF 50 OR MORE AND WHICH IS USED FOR ASSEMBLY PURPOSES SHALL HAVE THE CAPACITY OF THE ROOM POSTED IN A CONSPICUOUS PLACE ON AN APPROVED SIGN NEAR THE MAIN EXIT FROM THE ROOM.
8. EXIT SIGNAGE: THE PATH OF EXIT TRAVEL TO AND WITHIN EXITS IN A BUILDING SHALL BE IDENTIFIED BY EXIT SIGNS CONFORMING TO THE REQUIREMENTS OF C.B.C.
9. SMOKE DETECTORS DUCT WORK: SMOKE DETECTORS ARE TO BE MOUNTED IN SUPPLY DUCTWORK OF NEW AIR CONDITIONING SYSTEMS SUPPLYING GREATER THAN 2000 CFM. THE DETECTORS SHALL BE WIRED TO SHUT OFF THE AIR HANDLING UNIT WHEN SMOKE IS DETECTED. A SMOKE DETECTION SHUT-OFF TEST IS REQUIRED.
10. EMERGENCY LIGHTING: THE APPLICANT SHALL INSTALL EMERGENCY LIGHTING WITH BATTERY BACKUP OR AN APPROVED ALTERNATE.
11. SUBMIT DEFERRED FIRE SPRINKLER PLANS DIRECTLY TO MODESTO REGIONAL FIRE AUTHORITY.
12. THE WATER FLOW ALARM SHALL BE MONITORED PER CFC 903.4.1 THE FIRE ALARM SHALL HAVE AND MAINTAIN A UL FIRE ALARM CERTIFICATE FOR THE LIFE OF THE ALARM SYSTEM.

6 FIRE PROTECTION NOTES

1. FLOOR TRUSSES
2. EXTERIOR SIGNAGE
3. ELEVATOR AND ELEVATOR HOIST

5 DEFERRED SUBMITTALS ⚠1

PROJECT INFORMATION AND CODES

SITE ADDRESS :	2000 W. BRIGGSMORE AVENUE SUITE I MODESTO, CA 95350
APN#:	060-036-013
NUMBER OF STORIES:	ONE STORY BUILDING TWO STORY T.I.
BUILDING AREAS	
GROUND FLOOR:	14,091 SQ. FT.
SECOND FLOOR:	4,557 SQ. FT.
TOTAL T.I. AREA:	18,648 SQ. FT.
BUILDING TYPE:	EXISTING TYPE VB
OCCUPANCY:	B
NUMBER OF OCCUPANTS:	325
EXITS REQUIRED:	2 EXITS (> THAN 49)
EXITS PROVIDED:	6 EXITS
PARKING REQUIREMENTS	
MEDICAL USE AREA:	1,895 SQ. FT.
PARKING RATIO (1/200):	1,895/200 = 10 PARKING STALLS
OFFICE USE AREA:	16,753 SQ. FT.
PARKING RATIO (1/300):	16,753/300 = 56 PARKING STALLS
TOTAL PARKING REQUIRED:	66 PARKING STALLS
FIRE SPRINKLERS:	YES, EXISTING
JURISDICTION:	CITY OF MODESTO

THIS PROJECT TO COMPLY WITH THE FOLLOWING CODES:
2013 CALIFORNIA BUILDING CODE, VOLUMES 1-2
2013 CALIFORNIA ELECTRIC CODE
2013 CALIFORNIA MECHANICAL CODE
2013 CALIFORNIA PLUMBING CODE
2013 CALIFORNIA FIRE CODE
2013 CALIFORNIA ENERGY CODE
TITLE 24 ACCESSIBILITY STANDARDS
2013 CALIFORNIA GREEN BUILDING STANDARDS CODE ⚠1

3 PROJECT INFORMATION AND CODES

SHEET INDEX

T1.1	TITLE SHEET
T1.2	GROUND FLOOR EXITING PLAN, OCCUPANT LOADS, TOILET REQUIREMENTS
T1.3	SECOND FLOOR EXITING PLAN, OCCUPANT LOADS
AS.1	REFERENCE SITE PLAN
A1.1	GROUND FLOOR PLAN
A1.2	SECOND FLOOR PLAN
A2.1	GROUND FLOOR CEILING PLAN
A2.2	SECOND FLOOR CEILING PLAN
A2.3	CEILING DETAILS
A3.1	ENLARGED TOILET PLANS AND INTERIOR ELEVATIONS
A3.2	ENLARGED TOILET PLANS AND INTERIOR ELEVATIONS
A3.3	INTERIOR ELEVATIONS
A3.4	INTERIOR ELEVATIONS
A4.1	FINISH SCHEDULE - GROUND FLOOR
A4.2	FINISH SCHEDULE - GROUND & SECOND FLOORS
A4.3	DOOR SCHEDULE - GROUND & SECOND FLOORS
A4.4	WINDOW SCHEDULE - GROUND & SECOND FLOORS
A8.1	DETAILS
A8.2	DETAILS
A8.3	DETAILS
A8.4	DETAILS
S1.1	GENERAL NOTES
S1.2	STRUCTURAL DETAILS
S1.3	NON STRUCTURAL WALL AND CEILING DETAILS
S2.1	ENLARGED FOUNDATION PLAN
S2.2	ENLARGED FLOOR FRAMING PLAN
S2.3	PARTIAL ROOF FRAMING PLAN
S3.1	FOUNDATION DETAILS
S4.1	FLOOR FRAMING DETAILS
S5.1	ROOF FRAMING DETAILS
S6.1	CONNECTION DETAILS
M0.0	NOTES
M1.0	GROUND FLOOR AIR DISTRIBUTION PLAN
M2.0	SECOND FLOOR AIR DISTRIBUTION PLAN
M3.0	HVAC ROOF PLAN
M4.0	SCHEDULES & DETAILS
EN-1	ENERGY FORMS
P1.1	WASTE & VENT PIPING PLAN FIRST FLOOR
P1.2	WASTE & VENT PIPING PLAN SECOND FLOOR
P2.1	WATER PIPING PLAN FIRST FLOOR
P2.2	WATER PIPING PLAN SECOND FLOOR
P3	GAS & CONDENSATE PIPING PLAN
P4	PLUMBING NOTES, SCHEDULE & DETAIL
E1	ELECTRICAL PANEL SCHEDULES, ONE-LINE DIAGRAM
E2	ELECTRICAL POWER PLAN FIRST FLOOR
E3	ELECTRICAL LIGHTING PLAN FIRST FLOOR
E4	ELECTRICAL POWER PLAN SECOND FLOOR
E5	ELECTRICAL LIGHTING PLAN SECOND FLOOR
E6	MECHANICAL ELECTRICAL PLAN
E7	TITLE 24
E8	TITLE 24

1 SHEET INDEX

ALL WORK SHALL COMPLY WITH THE REQUIREMENTS OF LOCAL, COUNTY, STATE OR FEDERAL AGENCIES HAVING JURISDICTION. L STREET ARCHITECTS, LIMITED ASSUMES NO RESPONSIBILITY FOR THE SUPERVISION OF CONSTRUCTION OR PROPER EXECUTION OF THE WORK SHOWN ON THESE DRAWINGS. SAFETY METHODS AND TECHNIQUES OR UNAUTHORIZED CHANGES TO THESE DRAWINGS ARE NOT THE RESPONSIBILITY OF L STREET ARCHITECTS, LIMITED. DEVIATIONS FROM THE ORIGINAL DRAWINGS MUST BE APPROVED IN WRITING PRIOR TO CONSTRUCTION. THE PLANS, IDEAS AND DESIGNS SHOWN ON THESE DRAWINGS ARE THE PROPERTY OF L STREET ARCHITECTS, DEVISED SOLEY FOR THIS CONTRACT. THESE PLANS SHALL NOT BE USED, IN WHOLE OR PART, FOR ANY PURPOSE FOR WHICH THEY WERE NOT INTENDED WITHOUT THE EXPRESS WRITTEN CONSENT OF L STREET ARCHITECTS, LIMITED © COPYRIGHT

L Street Architects
L i m i t e d
1414 L Street
Modesto, California 95354
209-575-1415 209-575-4374 Fax
www.lstreetarchitects.com

LICENSED ARCHITECT ROBERT T. LeGRASSE C-8827 RENEWAL 11/30/15 STATE OF CALIFORNIA

PROPOSED TENANT IMPROVEMENT FOR:

CENTER FOR HUMAN SERVICES

2000 W. BRIGGSMORE, SUITE I
MODESTO, CALIFORNIA 95350

REVISIONS:
⚠1 12/09/14 BLDG. REV

DRAWN:	G. MEJIA
DATE:	11/06/2014
FILE:	216-T11
JOB:	61.216
PRINT DATE:	

TITLE SHEET
PROJECT INFO
SHEET INDEX
VICINITY MAP

T1.1

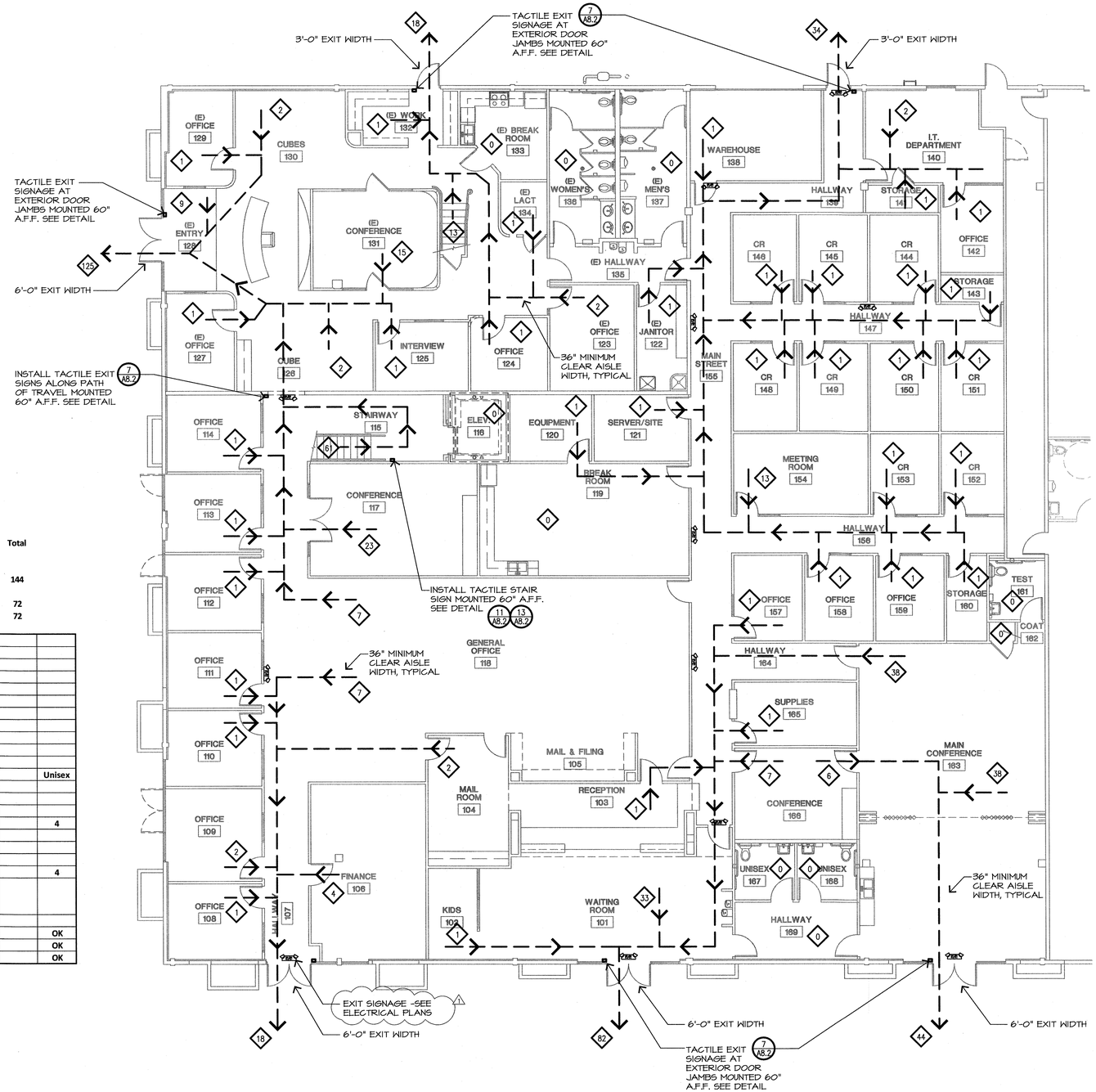

CHS - Toilet Requirements

Use	Area	Load	Occ.	Total
Offices	9,724	1 per 200	49	
Conference	2,832	1 per 30	94	
Warehouse	216	1per 5000	1	**144**
			Men	**72**
			Women	**72**

Required				Men		Women		
Water Closets	Men	2: 51 to 100		**2**				
	Women	4:51 to 100				**4**		
Urinals	Men	1:1-100		**1**				
Lavs	Men	1:1-75		**1**				
	Women	2: 51 to 100				**2**		
Provided				**Men**		**Women**		**Unisex**
Water Closets	Men			**2**				
	Women					**4**		
	unisex							**4**
Urinals	Men			**2**				
Lavs	Men			**2**				
	Women					**2**		
	Unisex							**4**
Totals			**Required**		**Provided Men & Women**			
Water Closets			**6**		**10**			**OK**
Urinals			**1**		**2**			**OK**
Lavs			**3**		**8**			**OK**

Center for Human Services - Occupant loads

	Name	Area	Use	Accessory	occ-rate	occupants
		Total SF			1 PER x SF	
101	Waiting Room	490	B		15	33
102	Kids	84	B		100	1
103	Reception	132	B		100	1
104	Mail Room	176	B		100	2
105	Mail and Filing	70	B		100	1
106	Finance	360	B		100	4
107	Hallway		B	X	NA	
108	Office	130	B		100	1
109	Office	163	B		100	2
110	Office	130	B		100	1
111	Office	130	B		100	1
112	Office	130	B		100	1
113	Office	130	B		100	1
114	Office	130	B		100	1
115	Stairway		B	X	NA	
116	Elevator		B	X	NA	
117	Conference	345	B		15	23
118	Gen. Office	1305	B		100	13
119	Breakroom		B	X	NA	
120	Equipment	100	B		100	1
121	Server	117	B		100	1
122	Janitor	105	B		100	1
123	Office	180	B		100	2
124	Office	105	B		100	1
125	Interview	119	B		100	1
126	Cube	180	B		100	2
127	Office	130	B		100	1
128	Entry	140	B		15	9
129	Office	130	B		100	1
130	Cubes	195	B		100	2
131	Conference	221	B		15	15
132	Work	120	B		100	1
133	Break Room		B	X	NA	
134	Lact.	50	B		100	1
135	Hallway		B	X	NA	
136	Womens Toilet		B	X	NA	
137	Mens Toilet		B	X	NA	
138	Warehouse	216	S1		500	1
139	Hallway		B	X	NA	
140	IT Department	229	B		100	2
141	Storage	40	B		100	1
142	Office	99	B		100	1
143	Storage	34	B		100	1
144	CR (office typ.)	114	B		100	1
145	CR	114	B		100	1
146	CR	104	B		100	1
147	Hallway		B	X	NA	
148	CR	104	B		100	1
149	CR	114	B		100	1
150	CR	114	B		100	1
151	CR	99	B		100	1
152	CR	99	B		100	1
153	CR	114	B		100	1
154	Meeting	198	B		15	13
155	Main Street (hall)		B	X	NA	
156	Hallway		B	X	NA	
157	Office	114	B		100	1
158	Office	114	B		100	1
159	Office	114	B		100	1
160	Storage	66	B		100	1
161	Test (toilet)		B	X	NA	
162	Coat	12	B		100	1
163	Main Conference	1144	B		15	76
164	Hallway		B	X	NA	
165	Supplies	144	B		100	1
166	Conference	192	B		15	13
167	Unisex		B	X	NA	
168	Unisex		B	X	NA	
169	Hallway		B	X	NA	
	Total					**251**

This set of plans MUST be kept on the job at all times and it unlawful to make any changes or alterations on same without written permission from Building Safety Division, City of Modesto.

REVIEWED FOR CODE COMPLIANCE

DEC 30 2014

By_____ Permit No:_____

The stamping of this plan SHALL NOT be held to permit or to be an approval of the violation of any provisions of any Ordinance or Law. Occupancy of structure not permitted until after final approval.

NORTH

17 | 1/8" | GROUND FLOOR EXIT PLAN

L Street Architects
Limited
1414 L Street
Modesto, California 95354
209-575-1415 209-575-4374 Fax
www.lstreetarchitects.com

STATE OF CALIFORNIA · LICENSED ARCHITECT · ROBERT L. BRABB · C-8827 · RENEWAL 12/31/15

PROPOSED TENANT IMPROVEMENT FOR:

CENTER FOR HUMAN SERVICES

2000 W. BRIGGSMORE, SUITE I
MODESTO, CALIFORNIA 95350

REVISIONS:
1 12/09/14 BLDG. REV

DRAWN:	G. MEJIA
DATE:	11/06/2014
FILE:	216-T12
JOB:	61.216
PRINT DATE:	

GROUND FLR
EXIT PLAN
OCCUPANT
LOADS
TOILET CALCS

T1.2

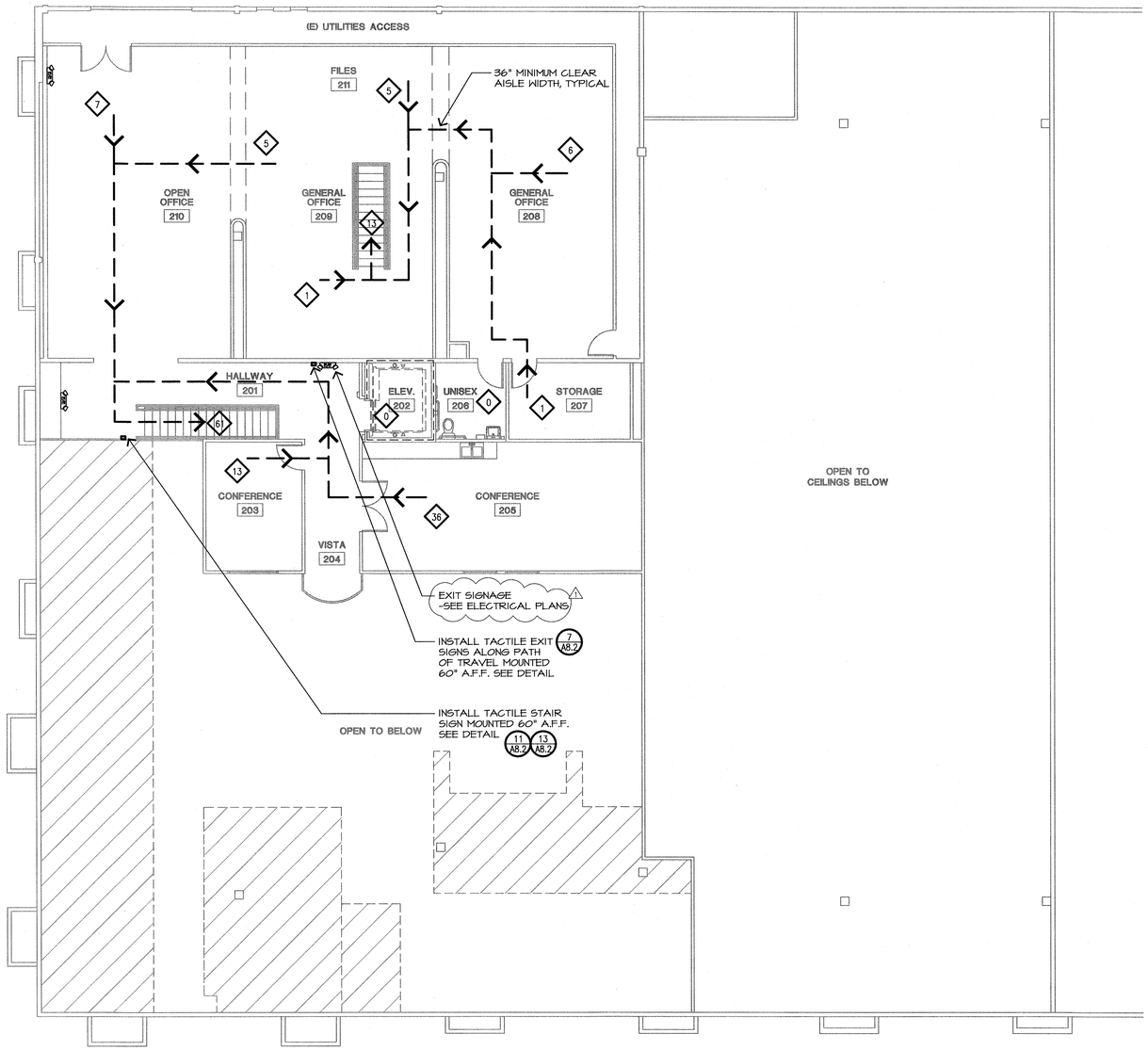

Center for Human Services - Occupant loads

	Name	Area	Use	Accessory	occ-rate	occupants
		Total SF			1 PER x SF	
201	Hallway		B	X	NA	
202	Elevator		B	X	NA	
203	Conference	192	B		15	13
204	Vista		B	X	NA	
205	Conference	540	B		15	36
206	Unisex		B	X	NA	
207	Storage	135	B		100	1
208	General Office	600	B		100	6
209	General Office	612	B		100	6
210	General Office	660	B		100	7
211	Files	544	B		100	5
Total					74	325

This set of plans MUST be kept on the job at all times and it is unlawful to make any changes or alterations on same without written permission from Building Safety Division, City of Modesto.

REVIEWED FOR CODE COMPLIANCE

DEC 30 2014

By_____ Permit No._____

The stamping of this plan SHALL NOT be held to permit or to be an approval of the violation of any provisions of any Ordinance or Law. Occupancy of structure not permitted until after final approval.

NORTH

17 | 1/8" | 2ND FLOOR EXIT PLAN

L Street Architects
Limited
1414 L Street
Modesto, California 95354
209-575-1415 209-575-4574 fax
www.lstreetarchitects.com

LICENSED ARCHITECT
ROBERT W. WEAVER
C-8827
RENEWAL 12/31/15
STATE OF CALIFORNIA

PROPOSED TENANT IMPROVEMENT FOR:

CENTER FOR HUMAN SERVICES

2000 W. BRIGGSMORE, SUITE I
MODESTO, CALIFORNIA 95350

REVISIONS:
1 12/09/14 BLDG. REV

DRAWN:	G. MEJIA
DATE:	11/06/2014
FILE:	216-T13
JOB:	61.216
PRINT DATE:	

2ND FLOOR
EXIT PLAN
OCCUPANT
LOADS

T1.3

BRIGGSMORE AVE

EXISTING TRASH ENCLOSURES

EXISTING PANIC BAR ON MAN GATE

FUTURE BUILDING (NOT IN SCOPE)

EXISTING ACCESSIBLE PATH OF TRAVEL

EXISTING ACCESSIBLE PARKING STALLS & RAMPS

SCOPE OF WORK SHOWN HATCHED

TYP. OUTLINE OF EXISTING BUILDING

EXISTING PARKING STALLS

NOTE: NO PROPOSED CHANGES TO EXISTING SITEWORK

EXISTING BUILDING (NOT IN SCOPE)

NORTH

This set of plans MUST be kept on the job at all times and unlawful to make any changes or alterations on same w... written permission from Building Safety Division, City of Modesto.

REVIEWED FOR CODE COMPLIANCE

DEC 30 2014

By _____ Permit No: _____

This stamping of this plan SHALL NOT be held to permit or be an approval of the violation of any provisions of any Ordinance or Law. Occupancy of structure not permitted until after final approval.

17 1"=20' **REFERENCE SITE PLAN**

L Street Architects
Limited
1414 L Street
Modesto, California 95354
209-575-1415 209-575-4374 fax
www.lstreetarchitects.com

STATE OF CALIFORNIA · LICENSED ARCHITECT · ROBERT L. SCHAABE · C-8827 · RENEWAL 1/30/15

PROPOSED TENANT IMPROVEMENT FOR:

CENTER FOR HUMAN SERVICES

2000 W. BRIGGSMORE, SUITE I
MODESTO, CALIFORNIA 95350

REVISIONS:

DRAWN:	G. MEJIA
DATE:	11/06/2014
FILE:	216-AS1
JOB:	61.216
PRINT DATE:	

REFERENCE SITE PLAN

AS.1

THE GENERAL DESIGN PLAN AND SPECIFICATIONS, DRAWINGS, ETC. HERE PROVIDED BY THE ARCHITECT, IT SHALL REMAIN THE PROPERTY OF THE ARCHITECT. THE ARCHITECT SHALL RETAIN ALL RIGHTS, INCLUDING COPYRIGHT, IN THE DESIGN PLAN AND SPECIFICATIONS, DRAWINGS, ETC. HERE PROVIDED BY THE ARCHITECT. THE DESIGN PLAN AND SPECIFICATIONS, DRAWINGS, ETC. HERE PROVIDED BY THE ARCHITECT SHALL NOT BE USED BY ANYONE FOR ANY PURPOSE OTHER THAN THE PROJECT SPECIFIED HEREIN, WITHOUT THE ARCHITECT'S PRIOR WRITTEN CONSENT. © COPYRIGHT 2013

STAIR NOTES:

1. INTERIOR STAIRS SHALL HAVE THE UPPER APPROACH AND LOWER TREAD MARKED BY A STRIPE PROVIDING CLEAR VISUAL CONTRAST.
2. THE STRIPE SHALL BE A MINIMUM OF 2 INCHES WIDE TO A MAXIMUM OF 4 INCHES WIDE PLACED PARALLEL TO, AND NOT MORE THAN 1 INCH, FROM THE NOSE OF THE STEP OR UPPER APPROACH.
3. THE STRIPE SHALL EXTEND THE FULL WIDTH OF THE STEP OR UPPER APPROACH AND SHALL BE OF MATERIAL THAT IS AT LEAST AS SLIP RESISTANT AS THE OTHER TREADS OF THE STAIR. A PAINTED STRIPE SHALL BE ACCEPTABLE.

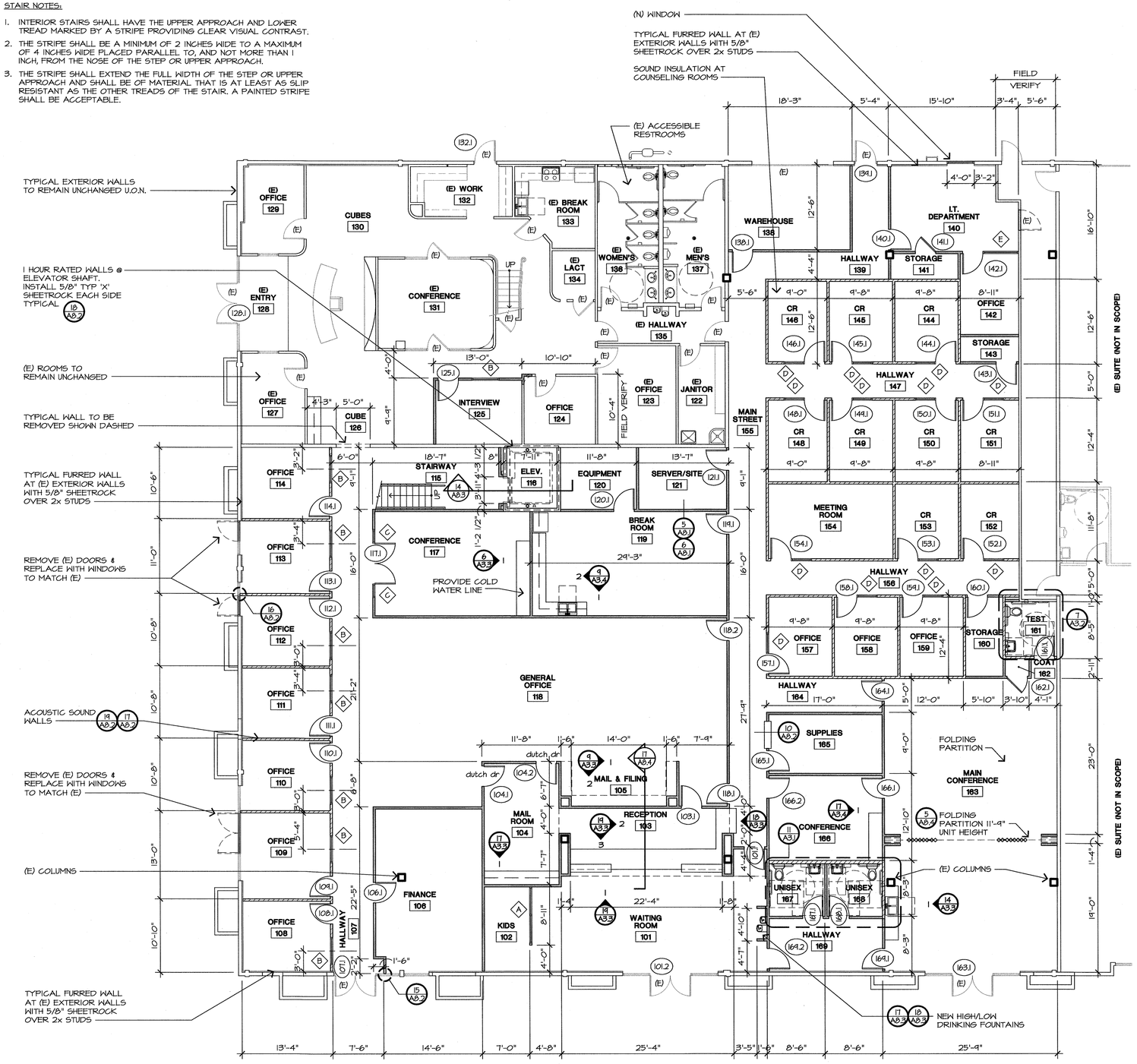

GENERAL NOTES:

1. GENERAL CONTRACTOR SHALL CONFIRM LAYOUT FOR ELECTRICAL POWER.
2. PRIOR TO OCCUPANCY GEN. CONTRACTOR TO PROVIDE & INSTALL 2A 10:BC FIRE EXTINGUISHER @ +34" A.F.F.
3. GEN. CONTRACTOR SHALL CONFIRM W/ TENANT ALL REQUIREMENTS REQUIRED FOR TELEPHONE, CPU, DATA LINES, PRIOR TO START OF CONSTRUCTION.
4. DO NOT SCALE DRAWINGS, WRITTEN DIMENSIONS GOVERN ALL WALL LOCATIONS SHALL BE AS FLOOR PLANS. IN CASE OF CONFLICT NOTIFY THE ARCHITECT. WALL LOCATION ON FLOOR PLAN TAKES PRECEDENCE OVER ALL OTHER PLANS.
5. ALL WALLS ARE DIMENSIONED FROM FINISH FACE OF STUD TO FINISH FACE OF STUD UNLESS NOTED OTHERWISE. ALL DIMENSIONS MARKED "CLEAR OR "CLR." SHALL BE MAINTAINED AND SHALL ALLOW FOR THICKNESS OF WALL FINISHES, UNLESS NOTED OTHERWISE.
6. DIMENSIONS NOTED "CLEAR" OR "CLR." MUST BE ACCURATELY MAINTAINED. AND SHALL NOT VARY MORE THAN 1/8" WITHOUT WRITTEN INSTRUCTIONS FROM THE ARCHITECT.
7. DIMENSIONS MARKED +/- MEAN A TOLERANCE NOT GREATER OR SMALLER THAN 1/2" FROM INDICATED DIMENSION. VERIFY FIELD DIMENSIONS EXCEEDING TOLERANCE WITH THE ARCHITECT AND SECURE THE ARCHITECTS APPROVAL.
8. MODIFY EXISTING FLOOR SURFACES AS REQUIRED TO INSTALL NEW FLOORING MATERIALS, THUS PREVENTING NOTICEABLE LUMPS AND OR DEPRESSIONS.
9. NOTIFY ARCHITECT IN WRITING OF ANY DISCREPANCIES OR CONFLICTS IN THE LOCATION(S) OF NEW CONSTRUCTION. UPON COMPLETION OF WALL LAYOUT NOTIFY ARCHITECT AND TENANT. VERIFICATION OF LAYOUT TO BE PROVIDED BY THE ARCHITECT PRIOR TO WALL CONSTRUCTION.
10. ALL WORK SHALL BE ERECTED AND INSTALLED PLUMB, LEVEL, SQUARE AND TRUE.
11. TRIM THE BOTTOMS OF DOORS TO CLEAR THE TOP OF FINISHED FLOOR, AS APPLICABLE BY 1/4" MAXIMUM UNLESS NOTED OTHERWISE NOTIFY ARCHITECT OF CONFLICTS.
12. ALL GLASS SHALL BE CLEAR TEMPERED GLASS. UNLESS NOTED OTHERWISE GLAZING TONG MARKS SHALL NOT BE VISIBLE. CLEAN & POLISH ALL GLASS PRIOR TO PROJECT DELIVERY.
13. "ALIGN" MEANS TO ACCURATELY LOCATE FINISH FACES IN THE SAME PLANE.
14. ALL INTERIOR DOORS SHALL HAVE 18" CLEAR ON THE STRIKE & PULL SIDE OF DOOR VERIFY AND ADVISE ARCHITECT OF EXCEPTIONS PRIOR TO THE CLOSING OUT WALLS.
15. PROVIDE TACTILE EXIT SIGNS PER CBC 1003.2.8.6.1
16. NEW ELECTRICAL RECEPTACLES AND SWITCHES MUST BE MOUNTED NO LOWER THAN 15" TO THE BOTTOM OF THE OUTLET BOX AND NO HIGHER THAN 48" TO THE TOP OF OUTLET BOX. CBC 11-B-308.1.
17. FOR ALL DOOR HARDWARE -SEE DOOR SCHEDULE A4.3

This set of plans MUST be kept on the job at all times and it is unlawful to make any changes or alterations on same without written permission from Building Safety Division, City of Modesto.

REVIEWED FOR CODE COMPLIANCE

DEC 30 2014

By_____ Permit No._____

The stamping of this plan SHALL NOT be held to permit or to be an approval of the violation of any provisions of any Ordinance or Law. Occupancy of structure not permitted until after final approval.

WALL LEGEND

- EXISTING WALLS
- WALLS TO BE REMOVED
- 3 5/8" METAL STUDS AT 16" O.C. WITH 5/8" SHEETROCK BOTH SIDES (20 A8.2)
- ONE HOUR RATED WALLS (18 A8.2)
- 6" METAL STUDS AT 16" O.C. WITH 5/8" SHEETROCK BOTH SIDES (SIM 20 A8.2)
- ACOUSTIC SOUND WALLS (STC 50). 3 5/8" METAL STUDS AT 16"o.c. WITH HORIZONTAL RESILIENT FURRING CHANNELS 24" o.c. AND 3 5/8" GLASS FIBER INSULATION FRICTION FIT IN STUD SPACE WITH 5/8" TYPE 'X' SHEETROCK BOTH SIDES. GA FILE NO. WP 1044 (19 A8.2)

NORTH

L Street Architects Limited
1414 L Street
Modesto, California 95354
209-575-1415 209-575-4574 fax
www.lstreetarchitects.com

STATE OF CALIFORNIA · LICENSED ARCHITECT · ROBERT J. WARREN · C-8627 · RENEWAL 12/31/15

PROPOSED TENANT IMPROVEMENT FOR:

CENTER FOR HUMAN SERVICES

2000 W. BRIGGSMORE, SUITE I
MODESTO, CALIFORNIA, 95350

REVISIONS:
1 12/09/14 BLDG. REV

DRAWN:	G. MEJIA
DATE:	11/06/2014
FILE:	216-A11
JOB:	61.216
PRINT DATE:	

GROUND FLOOR PLAN

A1.1

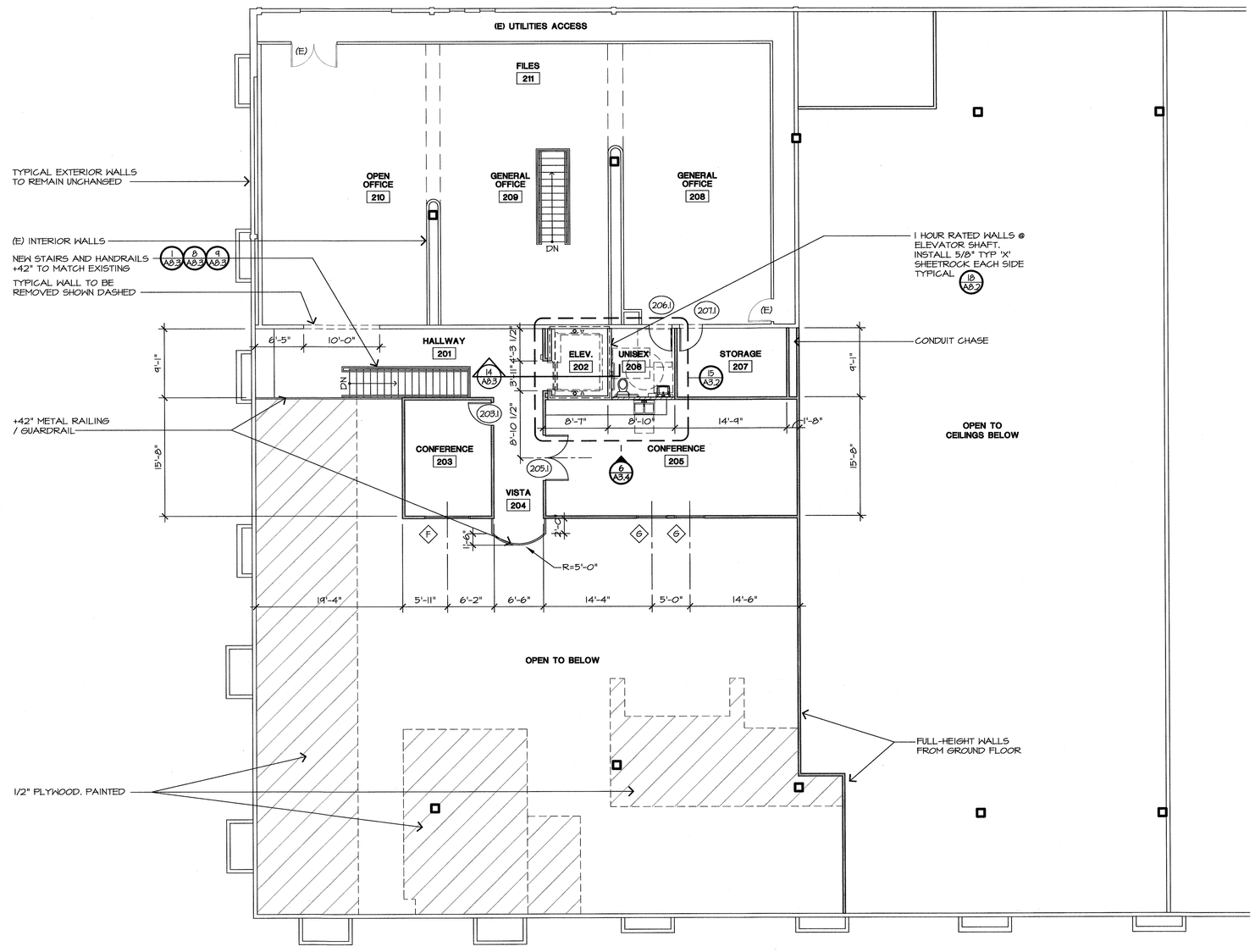

GENERAL NOTES:

1. GENERAL CONTRACTOR SHALL CONFIRM LAYOUT FOR ELECTRICAL POWER.
2. PRIOR TO OCCUPANCY GEN. CONTRACTOR TO PROVIDE & INSTALL 2A 10:BC FIRE EXTINGUISHER @ +34" A.F.F.
3. GEN. CONTRACTOR SHALL CONFIRM w/ TENANT ALL REQUIREMENTS REQUIRED FOR TELEPHONE, CPU, DATA LINES, PRIOR TO START OF CONSTRUCTION.
4. DO NOT SCALE DRAWINGS, WRITTEN DIMENSIONS GOVERN ALL WALL LOCATIONS SHALL BE AS FLOOR PLANS. IN CASE OF CONFLICT NOTIFY THE ARCHITECT. WALL LOCATION ON FLOOR PLAN TAKES PRECEDENCE OVER ALL OTHER PLANS.
5. ALL WALLS ARE DIMENSIONED FROM FINISH FACE OF STUD TO FINISH FACE OF STUD UNLESS NOTED OTHERWISE. ALL DIMENSIONS MARKED "CLEAR OR "CLR." SHALL BE MAINTAINED AND SHALL ALLOW FOR THICKNESS OF WALL FINISHES, UNLESS NOTED OTHERWISE.
6. DIMENSIONS NOTED "CLEAR" OR "CLR." MUST BE ACCURATELY MAINTAINED. AND SHALL NOT VARY MORE THAN 1/8" WITHOUT WRITTEN INSTRUCTIONS FROM THE ARCHITECT.
7. DIMENSIONS MARKED +/- MEAN A TOLERANCE NOT GREATER OR SMALLER THAN 1/2" FROM INDICATED DIMENSION. VERIFY FIELD DIMENSIONS EXCEEDING TOLERANCE WITH THE ARCHITECT AND SECURE THE ARCHITECTS APPROVAL.
8. MODIFY EXISTING FLOOR SURFACES AS REQUIRED TO INSTALL NEW FLOORING MATERIALS, THUS PREVENTING NOTICEABLE LUMPS AND OR DEPRESSIONS.
9. NOTIFY ARCHITECT IN WRITING OF ANY DISCREPANCIES OR CONFLICTS IN THE LOCATION(S) OF NEW CONSTRUCTION. UPON COMPLETION OF WALL LAYOUT NOTIFY ARCHITECT AND TENANT. VERIFICATION OF LAYOUT TO BE PROVIDED BY THE ARCHITECT PRIOR TO WALL CONSTRUCTION.
10. ALL WORK SHALL BE ERECTED AND INSTALLED PLUMB, LEVEL, SQUARE AND TRUE.
11. TRIM THE BOTTOMS OF DOORS TO CLEAR THE TOP OF FINISHED FLOOR, AS APPLICABLE BY 1/4" MAXIMUM UNLESS NOTED OTHERWISE NOTIFY ARCHITECT OF CONFLICTS.
12. ALL GLASS SHALL BE CLEAR TEMPERED GLASS, UNLESS NOTED OTHERWISE GLAZING TONG MARKS SHALL NOT BE VISIBLE. CLEAN & POLISH ALL GLASS PRIOR TO PROJECT DELIVERY.
13. "ALIGN" MEANS TO ACCURATELY LOCATE FINISH FACES IN THE SAME PLANE.
14. ALL INTERIOR DOORS SHALL HAVE 18" CLEAR ON THE STRIKE & PULL SIDE OF DOOR VERIFY AND ADVISE ARCHITECT OF EXCEPTIONS PRIOR TO THE CLOSING OUT WALLS.
15. PROVIDE TACTILE EXIT SIGNS PER CBC 1003.2.8.6.1
16. NEW ELECTRICAL RECEPTACLES AND SWITCHES MUST BE MOUNTED NO LOWER THAN 15" TO THE BOTTOM OF THE OUTLET BOX AND NO HIGHER THAN 48" TO THE TOP OF OUTLET BOX. CBC 11-B-308.1.
17. FOR ALL DOOR HARDWARE -SEE DOOR SCHEDULE A4.3

This set of plans MUST be kept on the job at all times and it is unlawful to make any changes or alterations on same without written permission from Building Safety Division, City of Modesto.
REVIEWED FOR CODE COMPLIANCE
DEC 30 2014
By_____ Permit No._____
The stamping of this plan SHALL NOT be held to permit or to be an approval of the violation of any provisions of any Ordinance or Law. Occupancy of structure not permitted until after final approval.

WALL LEGEND

- EXISTING WALLS
- WALLS TO BE REMOVED
- 3 5/8" METAL STUDS AT 16" O.C. WITH 5/8" SHEETROCK BOTH SIDES (20/A8.2)
- ONE HOUR RATED WALLS (18/A8.2)
- 6" METAL STUDS AT 16" O.C. WITH 5/8" SHEETROCK BOTH SIDES (20/A8.2) SIM
- ACOUSTIC SOUND WALLS (STC 50), 3 5/8" METAL STUDS AT 16"o.c. WITH HORIZONTAL RESILIENT FURRING CHANNELS 24" o.c. AND 3 5/8" GLASS FIBER INSULATION FRICTION FIT IN STUD SPACE WITH 5/8" TYPE "X" SHEETROCK BOTH SIDES. GA FILE NO. WP 1049 (19/A8.2)

NORTH

L Street Architects
Limited
1414 L Street
Modesto, California 95354
209-575-1415 209-575-4374 Fax
www.lstreetarchitects.com

LICENSED ARCHITECT
ANDREW K. LIVERMORE
C-8827
RENEWAL 12/31/15
STATE OF CALIFORNIA

PROPOSED TENANT IMPROVEMENT FOR:

CENTER FOR HUMAN SERVICES

2000 W. BRIGGSMORE, SUITE I
MODESTO, CALIFORNIA 95350

REVISIONS:
1 12/09/14 BLDG. REV

DRAWN:	G. MEJIA
DATE:	11/06/2014
FILE:	216-A12
JOB:	61.216
PRINT DATE:	

SECOND FLOOR PLAN

A1.2

17 | 1/8" | SECOND FLOOR PLAN

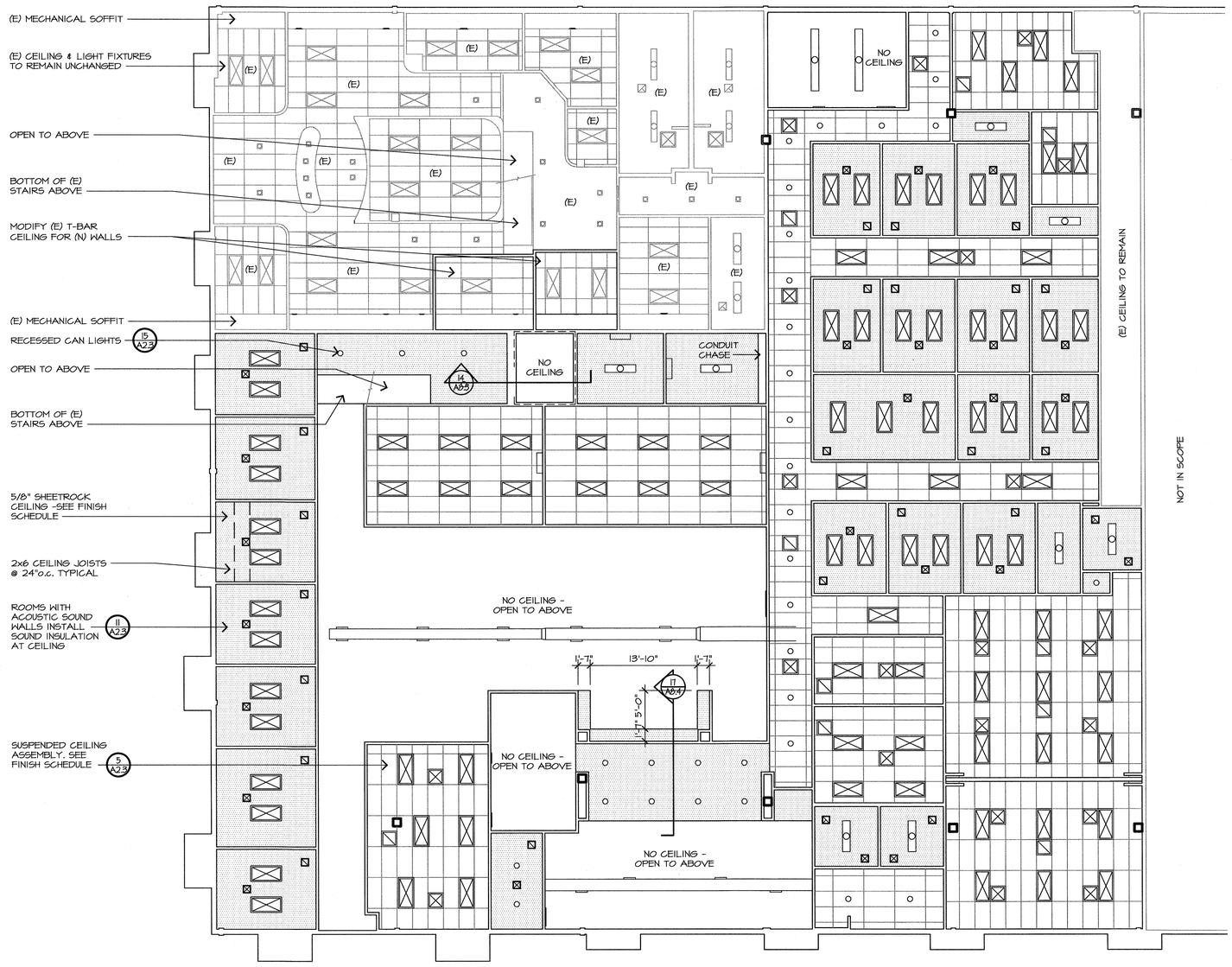

This set of plans MUST be kept on the job at all times and it is unlawful to make any changes or alterations on same without written permission from Building Safety Division, City of Modesto.

REVIEWED FOR CODE COMPLIANCE

DEC 30 2014

By_____ Permit No._____

The stamping of this plan SHALL NOT be held to permit or to be an approval of the violation of any provisions of any Ordinance or Law. Occupancy of structure not permitted until after final approval.

NORTH

17 | 1/8" | GROUND FLOOR CEILING PLAN

L Street Architects
Limited
1414 L Street
Modesto, California 95354
209-575-1415 209-575-4574 Fax
www.lstreetarchitects.com

STATE OF CALIFORNIA · LICENSED ARCHITECT · ROBERT L. BARNES · C-8827 · RENEWAL DATE 12-31-2015

PROPOSED TENANT IMPROVEMENT FOR:

CENTER FOR HUMAN SERVICES

2000 W. BRIGGSMORE, SUITE I
MODESTO, CALIFORNIA 95350

REVISIONS:

DRAWN:	G. MEJIA
DATE:	11/06/2014
FILE:	216-A21
JOB:	61.216
PRINT DATE:	

GROUND FLR CEILING PLAN

A2.1

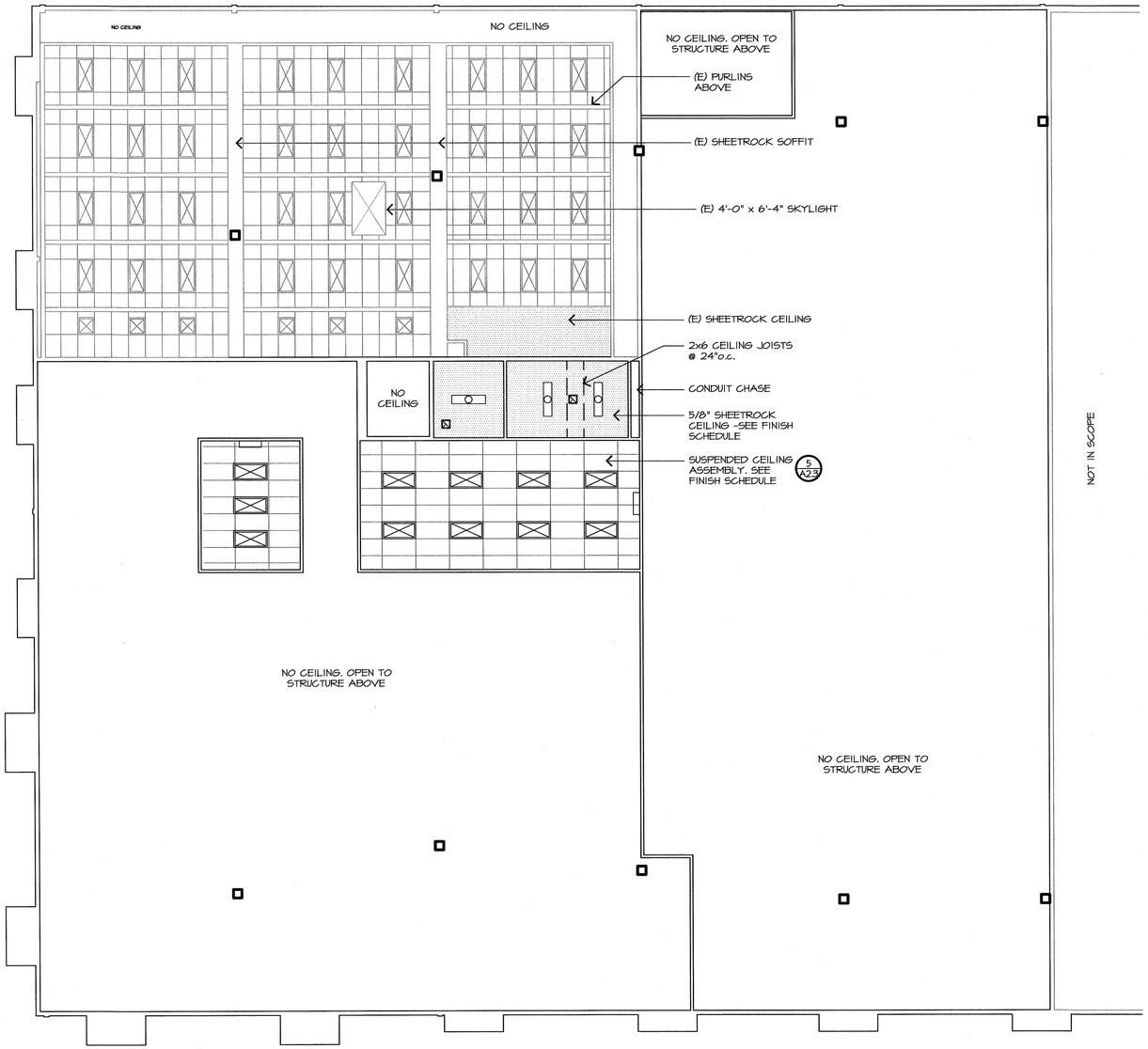

This set of plans MUST be kept on the job at all times and it is unlawful to make any changes or alterations on same without written permission from Building Safety Division, City of Modesto.

REVIEWED FOR CODE COMPLIANCE

DEC 30 2014

By_____ Permit No._____

The stamping of this plan SHALL NOT be held to permit or to be an approval of the violation of any provisions of any Ordinance or Law. Occupancy of structure not permitted until after final approval.

NORTH

17 | 1/8" | SECOND FLOOR CEILING PLAN

L Street Architects
Limited
1414 L Street
Modesto, California 95354
209-575-1415 209-575-4574 fax
www.lstreetarchitects.com

LICENSED ARCHITECT
C-8827
RENEWAL 10/31/15
STATE OF CALIFORNIA

PROPOSED TENANT IMPROVEMENT FOR:

CENTER FOR HUMAN SERVICES

2000 W. BRIGGSMORE, SUITE I
MODESTO, CALIFORNIA 95350

REVISIONS:

DRAWN:	G. MEJIA
DATE:	11/06/2014
FILE:	216-A22
JOB:	61.216
PRINT DATE:	

SECOND FLR CEILING PLAN

A2.2

THESE PLANS ARE THE PROPERTY OF L STREET ARCHITECTS, A CALIFORNIA CORPORATION. THEY ARE PROVIDED FOR THE PURPOSE OF OBTAINING PERMITS AND CONSTRUCTION. THEY ARE NOT TO BE USED FOR ANY OTHER PURPOSE OR PROJECT WITHOUT WRITTEN PERMISSION FROM L STREET ARCHITECTS. ORIGINAL DRAWINGS MUST BE APPROVED IN WRITING PRIOR TO CONSTRUCTION.

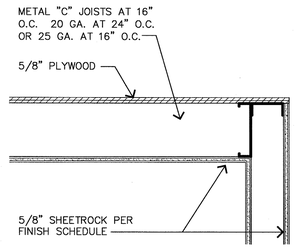

16 1-1/2" **PLYWOOD OVER CEILING**

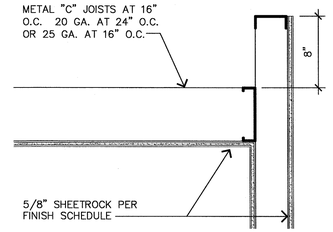

12 1-1/2" **CEILING FRAMING**

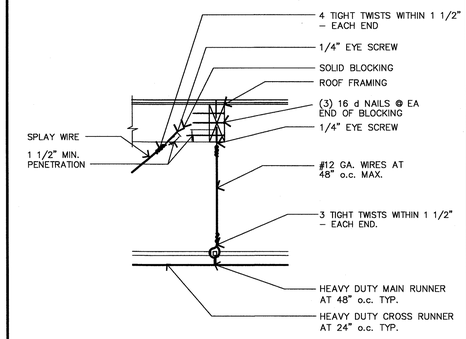

8 1-1/2" **WIRE ANCHORAGE**

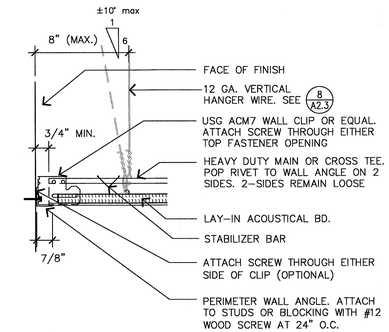

4 3" **FIXED END**

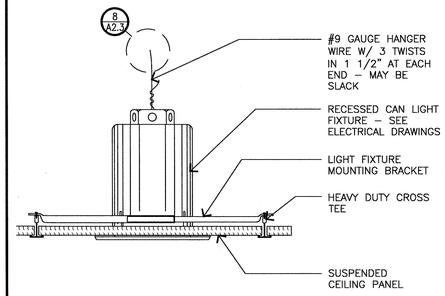

15 3/4" **CAN LIGHT**

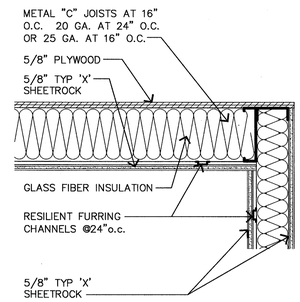

11 1-1/2" **SOUND FRAMING AT CEILING**

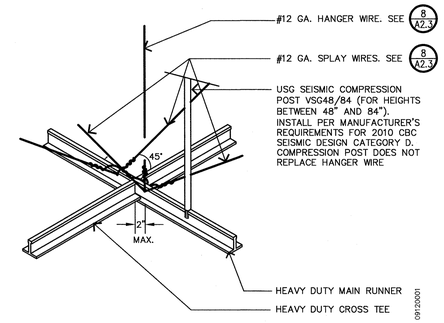

7 1-1/2" **LATERAL RESTRAINT**

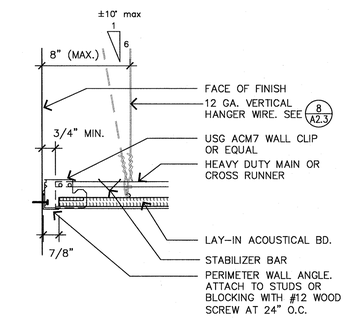

3 3" **FREE END**

19 **NOT USED**

18 **NOT USED**

SUSPENDED CEILING SYSTEM REQUIREMENTS FOR
2013 CBC SEISMIC CATEGORY D, E, & F

SUSPENDED ACOUSTICAL CEILINGS SHALL BE INSTALLED IN ACCORDANCE WITH THE PROVISIONS OF ASTM C 635, ASTM C 636, AND ASCE SECTION 13.5.6 AND PER THE MANUFACTURER'S REQUIREMENTS AND INSTRUCTIONS.

THE SUSPENDED ACOUSTICAL CEILING INSTALLATION SHALL COMPLY WITH THE FOLLOWING:

1. MINIMUM INTERSECTION STRENGTH LIMITS @ MAIN TEE & CROSS TEE TO BE 180 LBS.
2. 12 GAUGE VERTICAL HANGER WIRES AT 4'–0" O.C. IN BOTH DIRECTIONS.
3. CONNECTION DEVICE FROM VERTICAL WIRE TO THE STRUCTURE ABOVE MUST SUSTAIN MIN. 100 LBS.
4. A HEAVY DUTY T–BAR GRID SYSTEM SHALL BE USED.
5. VERTICAL HANGER WIRES TO BE NO MORE THAN 1 IN 6 OUT OF PLUMB
6. PERIMETER VERTICAL HANGER WIRES NOT MORE THAN 8" FROM WALL
7. THE WIDTH OF THE PERIMETER SUPPORTING CLOSURE ANGLE SHALL BE NOT LESS THAN 7/8".
8. IN EACH ORTHOGONAL HORIZONTAL DIRECTION, ONE END OF THE CEILING GRID SHALL BE ATTACHED TO THE CLOSURE ANGLE. THE OTHER END IN EACH HORIZONTAL DIRECTION SHALL HAVE A 3/4" CLEARANCE FROM THE WALL AND SHALL REST UPON AND BE FREE TO SLIDE ON A CLOSURE ANGLE.
9. PERIMETER TEE ENDS TO BE TIED TOGETHER AT PERIMETER.
10. FOR CEILINGS LARGER THAN 1000 SQ. FT. HORIZONTAL RESTRAINT (12 GAUGE SPLAY WIRES OR RIGID BRACING) WITHIN 2" OF INTERSECTION AND SPLAYED 90° APART AT 45° ANGLES SHALL BE PROVIDED AT 12'–0" O.C. IN BOTH DIRECTIONS, STARTING 6'–0" FROM WALLS.
11. FOR CEILINGS LARGER THAN 1000 SQ. FT. COMPRESSION POSTS (STRUTS) SHALL BE PROVIDED AT 12'–0" O.C. IN BOTH DIRECTIONS, STARTING 6'–0" FROM WALLS.
12. SPLAY BRACING CONNECTION STRENGTH TO BE 200 LBS.
13. PARTITIONS SHALL BE BRACED INDEPENDENTLY OF CEILING.
14. A SEISMIC SEPARATION JOINT IS REQUIRED WHEN CEILING AREAS EXCEED 2,500 SQ. FT.
15. CHANGES IN CEILING PLAN ELEVATION SHALL BE PROVIDED WITH POSITIVE BRACING.
16. LIGHT FIXTURES TO BE MECHANICALLY ATTACHED TO GRID PER CEC 410–16 (TWO PER FIXTURE UNLESS INDEPENDENTLY SUPPORTED.)
17. PENDANT–HUNG FIXTURES SHALL BE DIRECTLY SUPPORTED FROM STRUCTURE WITH 9–GAUGE WIRE
18. RIGID LAY–IN OR CAN FIXTURES WEIGHING LESS THAN 10 LBS TO HAVE ONE WIRE TO STRUCTURE ABOVE (MAY BE SLACK)
19. RIGID LAY–IN OR CAN FIXTURES WEIGHING 10 LBS TO 56 LBS SHALL HAVE TWO WIRES FROM HOUSING TO STRUCTURE ABOVE (MAY BE SLACK).
20. RIGID LAY–IN OR CAN FIXTURES WEIGHING MORE THAN 56 LBS SHALL BE SUPPORTED DIRECTLY FROM STRUCTURE WITH 12–GAUGE WIRES.
21. AIR TERMINALS LESS THAN 20 LBS TO BE POSITIVELY ATTACHED TO GRID.
22. AIR TERMINALS 20 TO 56 LBS TO BE POSITIVELY ATTACHED TO GRID AND TWO 12 GAUGE WIRES TO STRUCTURE (MAY BE SLACK).
23. AIR TERMINALS WEIGHING GREATER THAN 56 LBS TO BE DIRECTLY SUPPORTED FROM STRUCTURE WITH FOUR 12 GAUGE WIRES.
24. SPRINKLER HEADS AND OTHER PENETRATIONS SHALL HAVE A 2" OVERSIZE RING, SLEEVE, OR ADAPTER THROUGH THE CEILING TILE TO ALLOW FOR FREE MOVEMENT OF AT LEAST 1" IN ALL HORIZONTAL DIRECTIONS. ALTERNATIVELY, A SWING JOINT THAT CAN ACCOMMODATE 1" OF CEILING MOVEMENT IN ALL HORIZONTAL DIRECTIONS IS PERMITED TO BE PROVIDED AT THE TOP OF THE SPRINKLER HEAD EXTENSION.
25. CABLE TRAYS AND ELECTRICAL CONDUITS SHALL BE SUPPORTED INDEPENDENTLY OF THE CEILING.
26. PERIODIC SPECIAL INSPECTION OF THE INSTALLATION OF THE SUSPENDED CEILING GRID IS REQUIRED.

9 NTS **SUSPENDED CEILING NOTES**

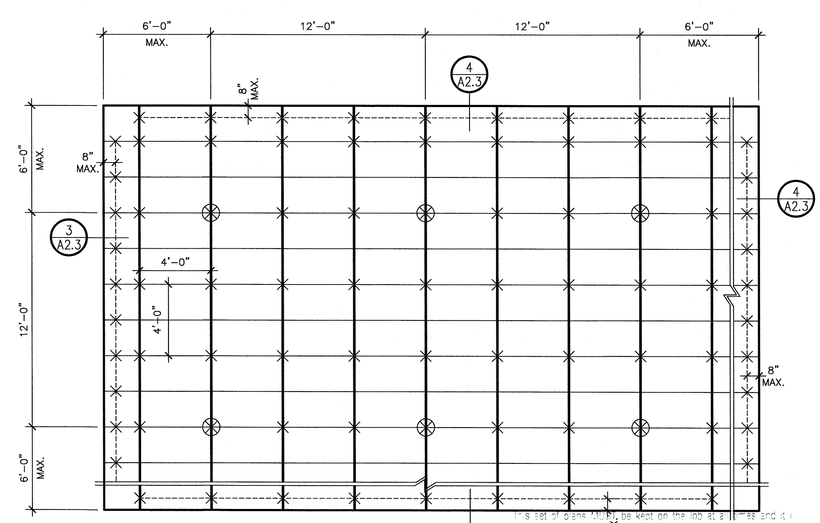

X 12–gauge hanger wire 8/A2.3

⊗ Lateral bracing and compression post location see detail 7/A2.3

--- Stabilizer bar

REFER TO SUSPENDED CEILING NOTES AT 9/A2.3 FOR ADDITIONAL REQUIREMENTS & INFORMATION

This set of plans MUST be kept on the job at all times and it is unlawful to make changes or alterations on same without written permission from Building Safety Division, City of Modesto.

REVIEWED FOR CODE COMPLIANCE

DEC 30 2014

By_____ Permit No._____

The stamping of this plan SHALL NOT be held to permit or to be an approval of the violation of any provisions of any Ordinance or Law. Occupancy of structure not permitted until after final approval.

5 1/4" **CEILING PLAN DETAIL**

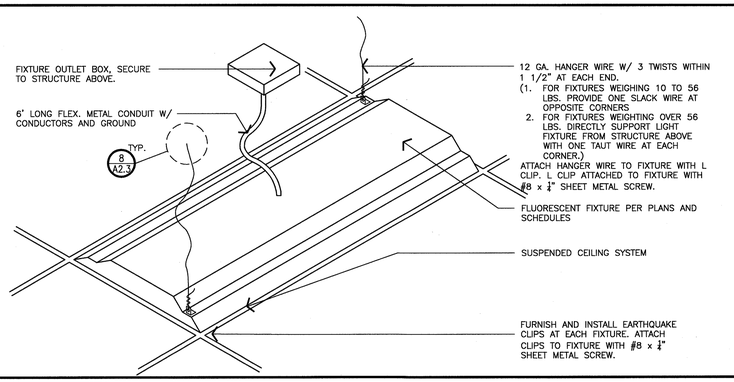

17 N.T.S. **LIGHT SUPPORT DETAIL IN T-BAR CEILING**

L Street Architects
L i m i t e d
1414 L Street
Modesto, California 95354
209-575-1415 209-575-4374 fax
www.lstreetarchitects.com

LICENSED ARCHITECT ROBERT L. DUPREE C-8827 RENEWAL 1/30/15 STATE OF CALIFORNIA

PROPOSED TENANT IMPROVEMENT FOR:

CENTER FOR HUMAN SERVICES

2000 W. BRIGGSMORE, SUITE I
MODESTO, CALIFORNIA 95350

REVISIONS:

DRAWN: G. MEJIA

DATE: 11/06/2014

FILE: 216-A23

JOB: 61.216

PRINT DATE:

DETAILS

A2.3

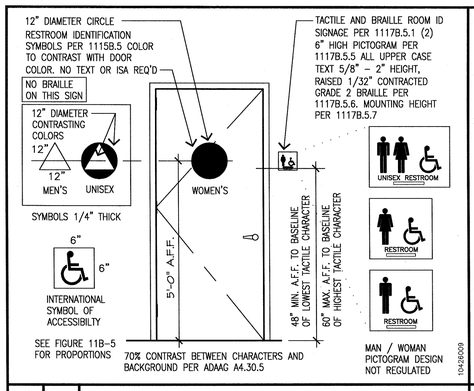

20 N.T.S. RESTROOM SIGNAGE

1. TOILET PARTITION DOOR TO ACCESSIBLE STALL SHALL BE EQUIPPED WITH LOOP OR U-SHAPED HANDLE IMMEDIATELY BELOW LATCH ON BOTH SIDES OF DOOR. THE LATCH SHALL BE FLIP-OVER STYLE, SLIDING OR OTHER HARDWARE NOT REQUIRING THE USER TO GRASP OR TWIST. THE PARTITIONS SHALL HAVE A 4" CLEAR SPACE UNDER THE DOORS.
2. WATER CLOSET COMPARTMENT SHALL BE EQUIPPED WITH A DOOR THAT HAS AN AUTOMATIC-CLOSING DEVICE AND SHALL HAVE A CLEAR, UNOBSTRUCTED OPENING WIDTH OF 32" WHEN LOCATED AT THE END AND 34" WHEN LOCATED AT THE SIDE WITH THE DOOR POSITIONED AT AN ANGLE OF 90 DEGREES FROM ITS CLOSED POSITION
3. CONTROLS FOR WATER CLOSET SHALL BE OPERABLE WITH ONE HAND AND SHALL NOT REQUIRE TIGHT GRASPING, PINCHING, OR TWISTING. CONTROLS FOR THE FLUSH VALVES SHALL BE MOUNTED ON THE WIDE SIDE OF TOILET AREAS, NO MORE THAN 44 INCHES ABOVE THE FLOOR. THE FORCE REQUIRED TO ACTIVATE CONTROLS SHALL BE NO GREATER THAN 5 POUNDS-FORCE.
4. GRAB BARS SHALL HAVE GRIPPING SURFACES WITH A DIAMETER OF 1-1/4 INCH TO 1-1/2 INCH LOCATED WITH A SPACE BETWEEN THE WALL AND GRAB BAR OF 1-1/2 INCH.
5. TOILET TISSUE DISPENSERS SHALL BE LOCATED ON THE WALL OR PARTITION CLOSEST TO THE WATER CLOSET 7 INCHES MINIMUM AND 9 INCHES MAXIMUM IN FRONT OF THE WATER CLOSET MEASURED TO THE CENTERLINE OF THE DISPENSER, MOUNTED BELOW THE GRAB BAR, WITH THE OUTLET OF THE DISPENSER AT A MINIMUM HEIGHT OF 19 INCHES. DISPENSERS THAT CONTROL DELIVERY OR THAT DO NOT PERMIT CONTINUOUS PAPER FLOW SHALL NOT BE USED.
6. URINAL SHALL BE ACCESSIBLE WITH A MINIMUM 14 INCHES AND MAXIMUM 17 INCHES RIM PROJECTION, A MAXIMUM 17 INCHES ABOVE THE FLOOR.
8. URINAL FLUSH CONTROLS SHALL BE OPERABLE WITH ONE HAND AND SHALL NOT REQUIRE TIGHT GRASPING, PINCHING, OR TWISTING OF THE WRIST AND SHALL BE MOUNTED NO MORE THAN 44 INCHES ABOVE THE FLOOR. THE FORCE REQUIRED TO ACTIVATE CONTROLS SHALL BE NO GREATER THAN 5 POUNDS-FORCE.
9. LAVATORY FAUCET CONTROLS SHALL BE OPERABLE WITH ONE HAND AND SHALL NOT REQUIRE TIGHT GRASPING, PINCHING, OR TWISTING OF THE WRIST. THE FORCE REQUIRED TO ACTIVATE CONTROLS SHALL BE NO GREATER THAN 5 POUNDS-FORCE. LEVER-OPERATED, PUSH-TYPE AND ELECTRONICALLY CONTROLLED MECHANISMS ARE EXAMPLES OF ACCEPTABLE DESIGNS.

16 N.T.S. RESTROOM NOTES

GENERAL NOTES:

A. FOR INTERIOR FINISHES, SEE FINISH SCHEDULE
B. F.O.F. = FACE OF FINISH
C. SEE 16/A3.1 FOR ADDITIONAL NOTES

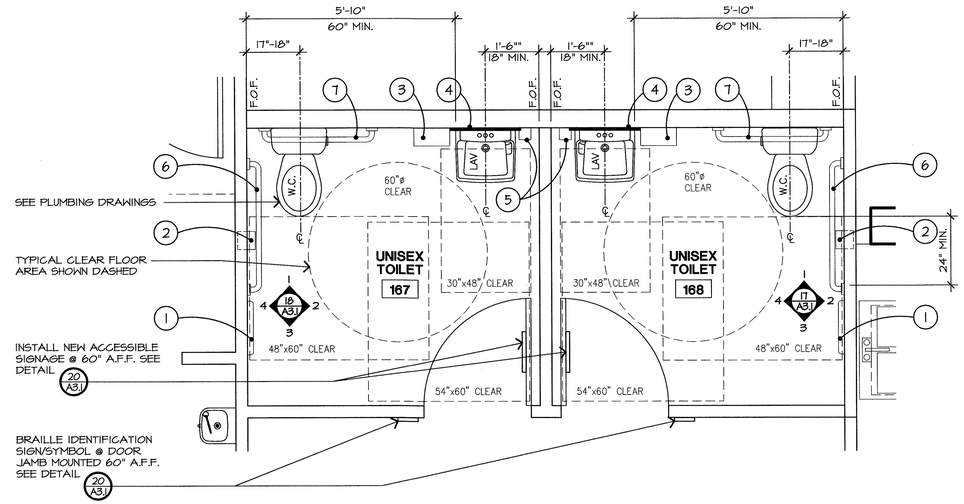

11 1/2" ENLARGED TOILET PLANS

SYM.	ITEM	MODEL	REMARKS
1	TOILET SEAT COVER DISPENSER	"BOBRICK" B-221	SURFACE-MOUNTED DISPENSER. 40" MAX TO OPERABLE AREA IN ACCESSIBLE STALLS
2	TOILET TISSUE DISPENSER	"BOBRICK" B-3888	SEMI-RECESSED DISPENSER
3	PAPER TOWEL DISPENSER	"BOBRICK" B-2620	SURFACE-MOUNTED DISPENSER
4	MIRROR	-	1/4" PLATE FLOAT GLASS MIRROR
5	LIQUID SOAP DISPENSER	"BOBRICK" B-2111	SURFACE-MOUNTED DISPENSER. 40" MAX TO OPERABLE AREA
6	GRAB BAR (SIDE)	"BOBRICK" B-6806x42"	18-GAUGE TYPE 304 STAINLESS STEEL TUBING 1-1/2" DIAMETER
7	GRAB BAR (REAR)	"BOBRICK" B-6806x36"	18-GAUGE TYPE 304 STAINLESS STEEL TUBING 1-1/2" DIAMETER

19 N.T.S. ACCESSORY SCHEDULE

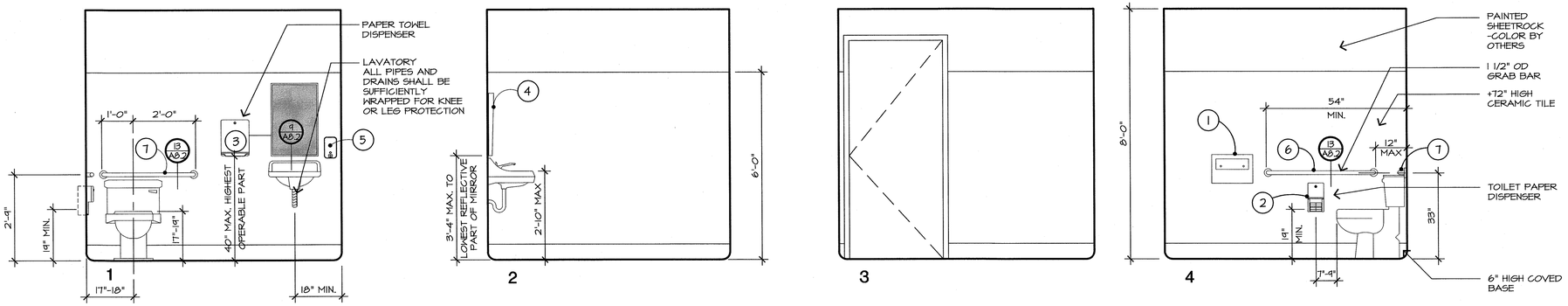

18 1/2" INTERIOR ELEVATIONS - UNISEX TOILET 167

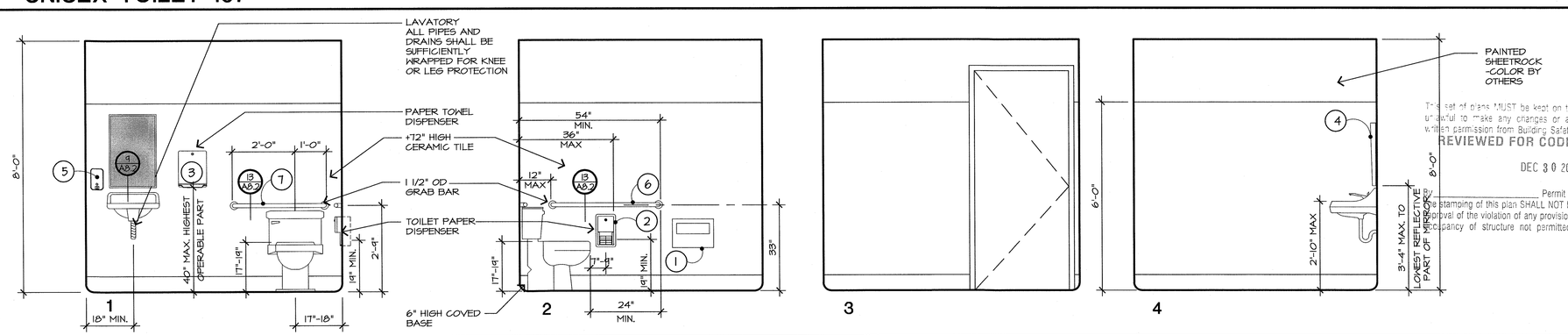

17 1/2" INTERIOR ELEVATIONS - UNISEX TOILET 168

L Street Architects
Limited
1414 L Street
Modesto, California 95354
209-573-4415 209-573-4374 Fax
www.lstreetarchitects.com

STATE OF CALIFORNIA · LICENSED ARCHITECT · CHARLES T. TOPPOSE · C-8827 · RENEWAL 12/31/15

PROPOSED TENANT IMPROVEMENT FOR:

CENTER FOR HUMAN SERVICES

2000 W. BRIGGSMORE, SUITE 1
MODESTO, CALIFORNIA 95350

REVISIONS:

DRAWN:	G. MEJIA
DATE:	11/06/2014
FILE:	216-A31
JOB:	61.216
PRINT DATE:	

This set of plans MUST be kept on the job at all times and it is unlawful to make any changes or alterations on same without written permission from Building Safety Division, City of Modesto.

REVIEWED FOR CODE COMPLIANCE

DEC 30 2014

Permit No. _____

By _____

The stamping of this plan SHALL NOT be held to permit or be approval of the violation of any provisions of any Ordinance or Law. Occupancy of structure not permitted until after final approval.

ENLARGED TOILET PLANS ELEVATIONS & DETAILS

A3.1

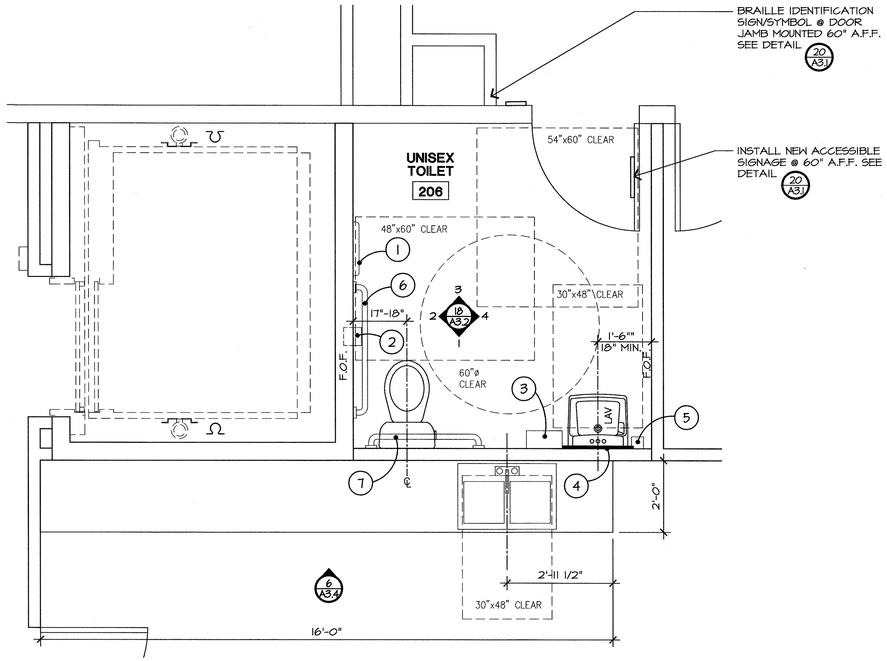

19 | 15 1/2" | ENLARGED PLAN UNISEX TOILET 206

GENERAL NOTES:

A. FOR INTERIOR FINISHES, SEE FINISH SCHEDULE

B. F.O.F. = FACE OF FINISH

C. SEE 16/A3.1 FOR ADDITIONAL NOTES

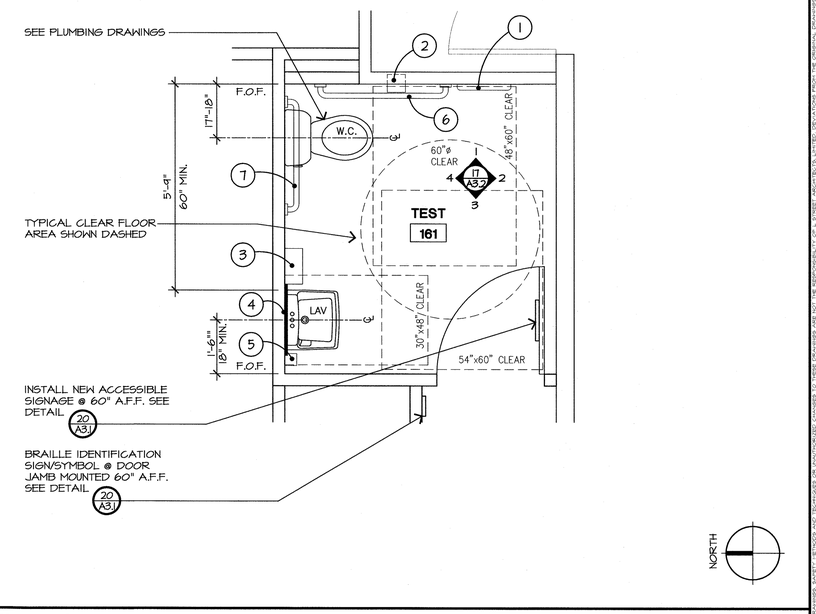

7 | 1/2" | ENLARGED PLAN TEST 161

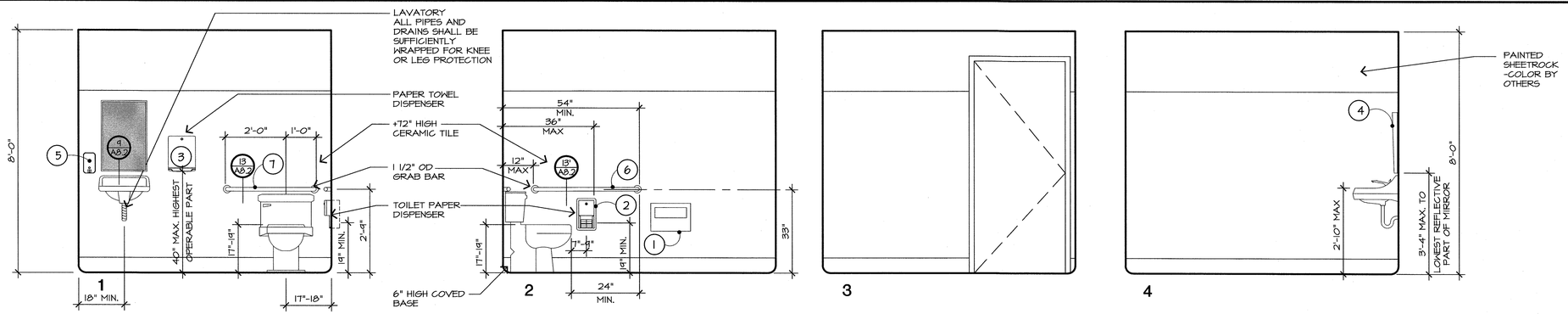

18 | 1/2" | INTERIOR ELEVATIONS - UNISEX TOILET 206

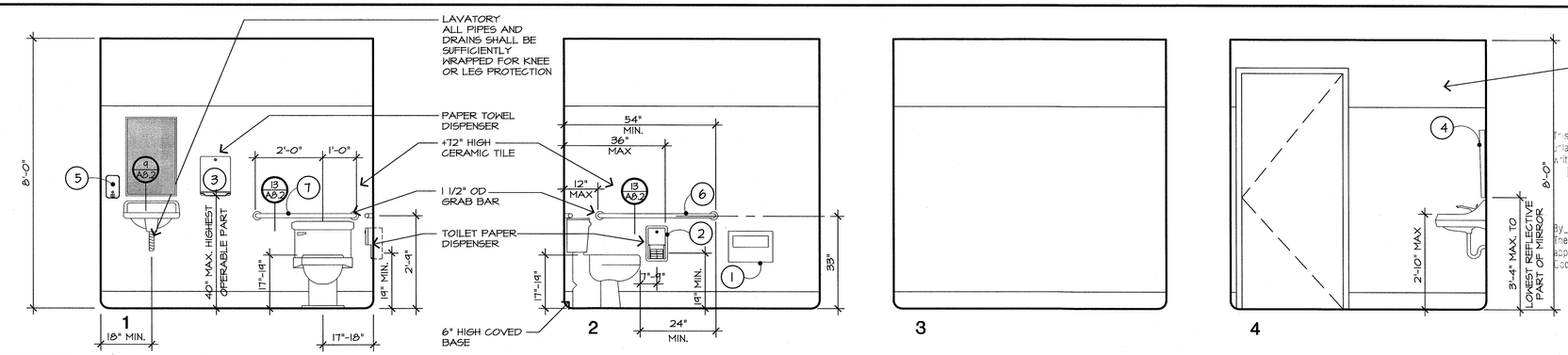

17 | 1/2" | INTERIOR ELEVATIONS - TEST 161

L Street Architects
Limited
1414 L Street
Modesto, California 95354
209-575-1415 209-575-4374 Fax
www.lstreetarchitects.com

LICENSED ARCHITECT
ROBERT D. WEBB
C-18827
RENEWAL 11/30/15
STATE OF CALIFORNIA

PROPOSED TENANT IMPROVEMENT FOR:

CENTER FOR HUMAN SERVICES

2000 W. BRIGGSMORE, SUITE I
MODESTO, CALIFORNIA 95350

REVISIONS:

DRAWN:	G. MEJIA
DATE:	11/06/2014
FILE:	216-A32
JOB:	61.216
PRINT DATE:	

This set of plans MUST be kept on the job at all times and it is unlawful to make any changes or alterations on same without written permission from Building Safety Division, City of Modesto.
REVIEWED FOR CODE COMPLIANCE
DEC 30 2014
By _____ Permit No. _____
The stamping of this plan SHALL NOT be held to permit or to be an approval of the violation of any provisions of any Ordinance or Law. Occupancy of structure not permitted until after final approval.

ENLARGED TOILET PLANS ELEVATIONS

A3.2

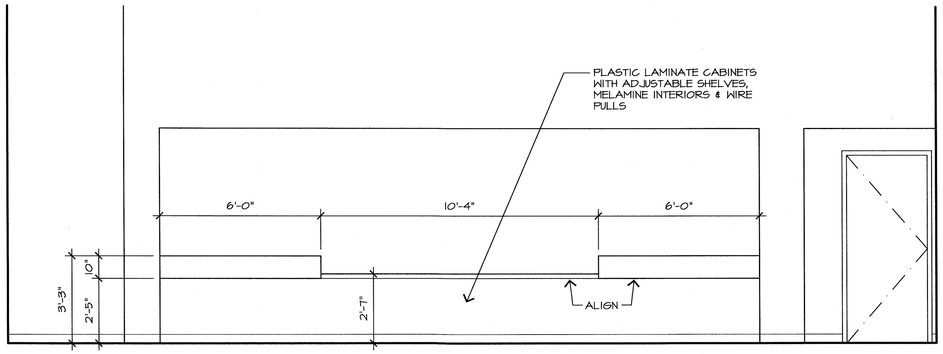

1

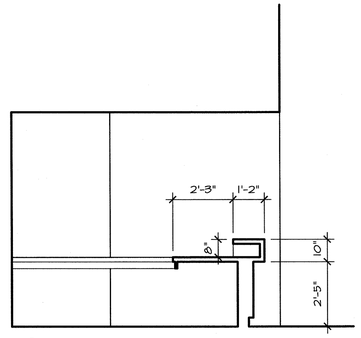

2

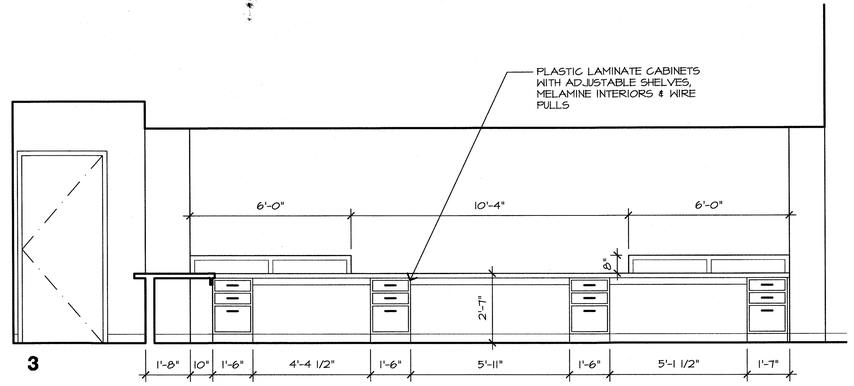

3

19 | 3/8" | INTERIOR ELEVATIONS - RECEPTION 103

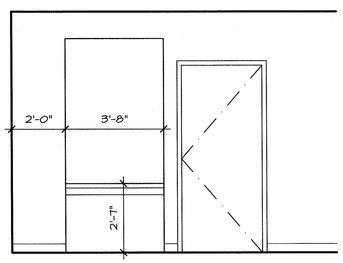

4

18 | 3/8" | RECEPTION 103 CONT-

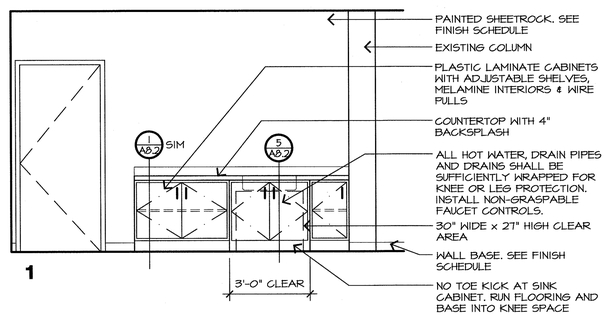

1

14 | 3/8" | INTERIOR ELEVATIONS - MAIN CONFERENCE 163

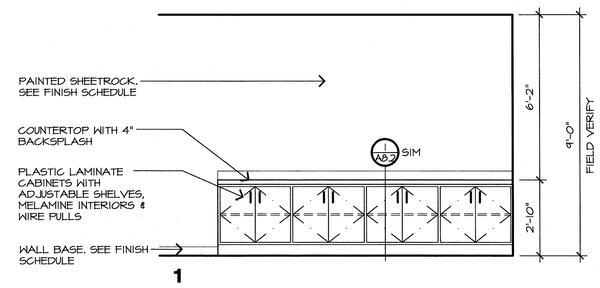

1

6 | 3/8" | INTERIOR ELEVATIONS - CONFERENCE 117

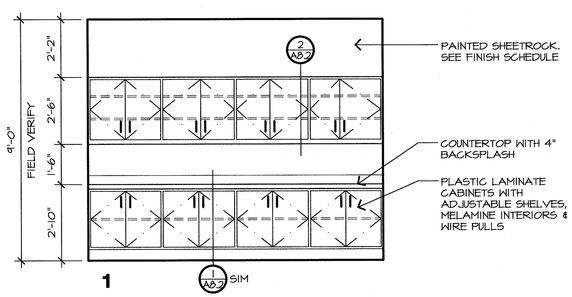

1

17 | 3/8" | INTERIOR ELEVATIONS - MAIL ROOM 104

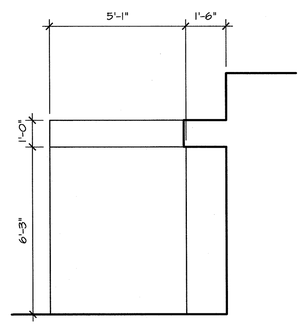

1

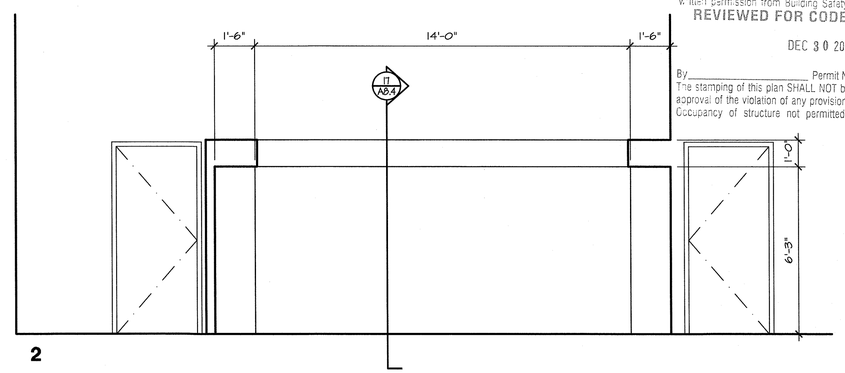

2

This set of plans MUST be kept on the job at all times and it unlawful to make any changes or alterations on same without written permission from Building Safety Division, City of Modesto.
REVIEWED FOR CODE COMPLIANCE
DEC 30 2014
By_____ Permit No._____
The stamping of this plan SHALL NOT be held to permit or to be an approval of the violation of any provisions of any Ordinance or Law. Occupancy of structure not permitted until after final approve

9 | 3/8" | INTERIOR ELEVATIONS - MAIL & FILING 105

L Street Architects
Limited
1414 L Street
Modesto, California 95354
209-575-1415 209-575-4574 Fax
www.lstreetarchitects.com

STATE OF CALIFORNIA · LICENSED ARCHITECT · NORMAN L. CARVER · NO. C-8527 · RENEWAL 12/31/15

PROPOSED TENANT IMPROVEMENT FOR:

CENTER FOR HUMAN SERVICES

2000 W. BRIGGSMORE, SUITE I
MODESTO, CALIFORNIA 95350

REVISIONS:

DRAWN:	G. MEJIA
DATE:	11/06/2014
FILE:	216-A33
JOB:	61.216
PRINT DATE:	

INTERIOR ELEVATIONS

A3.3

THESE DRAWINGS AND/OR SPECIFICATIONS AND THEIR PROPER USE ARE THE PROPERTY OF L STREET ARCHITECTS LTD. AND SHALL NOT BE REPRODUCED IN WHOLE OR IN PART WITHOUT THEIR WRITTEN PERMISSION. THESE DRAWINGS AND/OR SPECIFICATIONS ARE TO BE RETURNED TO L STREET ARCHITECTS LTD. UPON REQUEST.

20

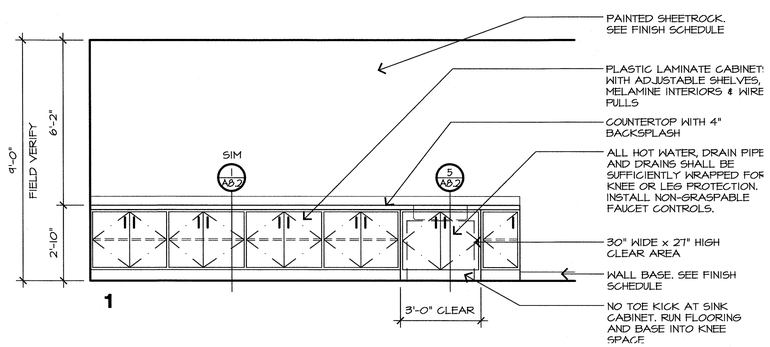

18

6 3/8" INTERIOR ELEVATIONS - CONFERENCE 205

These plans MUST be kept on the job at all times and it is unlawful to make any changes or alterations on same without written permission from Building Safety Division, City of Modesto.
REVIEWED FOR CODE COMPLIANCE
DEC 30 2014
By_____ Permit No._____
The stamping of this plan SHALL NOT be held to permit or to be an approval of the violation of any provisions of any Ordinance or Law. Occupancy of structure not permitted until after final approval.

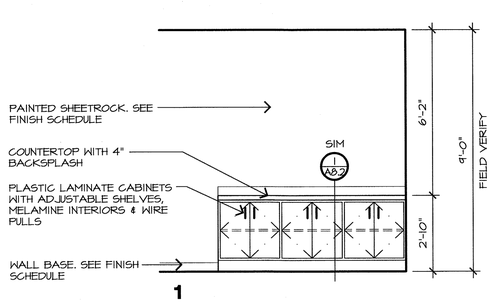

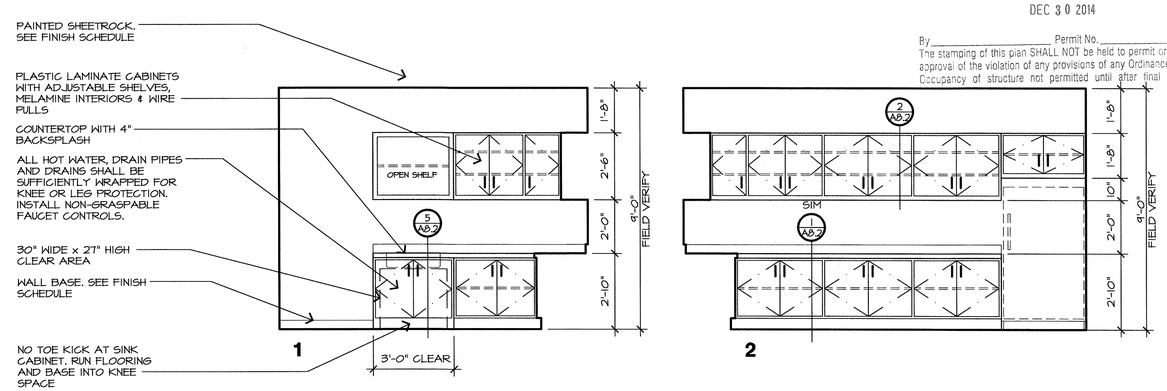

17 3/8" INTERIOR ELEVATIONS - CONFERENCE 166

9 3/8" INTERIOR ELEVATIONS - BREAK ROOM 119

L Street Architects
Limited
1414 L Street
Modesto, California 95354
209-575-1415 209-575-4374 Fax
www.lstreetarchitects.com

STATE OF CALIFORNIA · LICENSED ARCHITECT · STEPHEN J. KASPARIAN · C-8827 · RENEWAL 1-1-2015

PROPOSED TENANT IMPROVEMENT FOR:

CENTER FOR HUMAN SERVICES

2000 W. BRIGGSMORE, SUITE I
MODESTO, CALIFORNIA 95350

REVISIONS:

DRAWN:	G. MEJIA
DATE:	11/06/2014
FILE:	216-A34
JOB:	61.216
PRINT DATE:	

INTERIOR ELEVATIONS

A3.4

ROOM NUMBER	ROOM NAME	FLOORS			WALLS					CEILINGS			MISCELLANEOUS		ROOM NUMBER
		FLOORING	BASE	REMARKS	NORTH	EAST	SOUTH	WEST	REMARKS	CEILING HEIGHT	CEILING	REMARKS	CABINETS	REMARKS	
101	WAITING ROOM	1	5		-	A	A	A	FURRED WALL AT EXT. WALL	-	3				101
102	KIDS	1	5	AREA RUG BY OWNER	A	A	-	A	FURRED WALL AT EXT. WALL	-	3				102
103	RECEPTION	1	5		A	A	A	-		-	3				103
104	MAIL ROOM	1	5		A	A	A	A		-	3				104
105	MAIL & FILING	2	5		A	-	A	A		-	3				105
106	FINANCE	2	5		A	A	A	A	FURRED WALL AT EXT. WALL	10'-0"	1				106
107	HALLWAY	1	5		A	A	A	A		-	3				107
108	OFFICE	2	5		A	A	A	A	FURRED WALL AT EXT. WALL	10'-0"	6				108
109	OFFICE	2	5		A	A	A	A	FURRED WALL AT EXT. WALL	10'-0"	6				109
110	OFFICE	2	5		A	A	A	A	FURRED WALL AT EXT. WALL	10'-0"	6				110
111	OFFICE	2	5		A	A	A	A	FURRED WALL AT EXT. WALL	10'-0"	6				111
112	OFFICE	2	5		A	A	A	A	FURRED WALL AT EXT. WALL	10'-0"	6				112
113	OFFICE	2	5		A	A	A	A	FURRED WALL AT EXT. WALL	10'-0"	6				113
114	OFFICE	2	5		A	A	A	A	FURRED WALL AT EXT. WALL	10'-0"	6				114
115	STAIRWAY	1	5		-	-	-	A		10'-0"	1				115
116	ELEVATOR	4	4	NO COVE BASE	F	F	F	F		-	5				116
117	CONFERENCE	2	5		A	A	A	A		10'-0"	1				117
118	GENERAL OFFICE	1	5		A	A	A	A		-	3				118
119	BREAK ROOM	1	5		A	A	A	A		10'-0"	1				119
120	EQUIPMENT	1	5		C	C	C	C		9'-0"	2				120
121	SERVER / SITE ROOM	8	5		A	D	A	A		9'-0"	2				121
122	(E) JANITOR	7	-		E	E	E	E		-	4				122
123	(E) OFFICE	7	-		E	E	E	E		-	4				123
124	OFFICE	7	-		E	E	E	E		-	4				124
125	INTERVIEW	7	5		A	A	E	E		9'-0"	4				125
126	CUBE	7	4		E	-	A	E		-	4				126
127	(E) OFFICE	7	-		E	E	E	E		-	4				127
128	(E) ENTRY	7	-		E	E	E	E		-	4				128
129	(E) OFFICE	7	-		E	E	E	E		-	4				129
130	CUBES	7	5		E	E	E	-		-	4				130
131	(E) CONFERENCE	7	-		E	E	E	E		-	4				131
132	(E) WORK	7	-		E	E	E	E		-	4				132
133	(E) BREAK ROOM	7	-		E	E	E	E		-	4				133
134	(E) LACT	7	-		E	E	E	E		-	4				134
135	(E) HALLWAY	7	-		E	E	E	E		-	4				135
136	(E) WOMEN'S RESTROOM	7	-		E	E	E	E		-	4				136
137	(E) MEN'S RESTROOM	7	-		E	E	E	E		-	4				137
138	WAREHOUSE	1	-		E	E	C	C		-	4				138
139	HALLWAY	1	5		D	A	A	A		10'-0"	1				139
	(SEE SHEET A4.2 FOR CONT.)														

FLOORS & BASES	
1	SEALED & POLISHED CONCRETE
2	CARPET
3	CARPET TILES
4	CERAMIC TILE
5	RUBBER BASE
6	COVED TILE BASE
7	(E) FLOORING TO REMAIN UNCHANGED
8	STATIC DISSIPATIVE FLOORING

WALLS	
A	5/8" SHEETROCK (TAPE, TEXTURE & PAINT)
B	CERAMIC TILE WAINSCOT OVER WATER-RESISTANT SHEETROCK TO 72" A.F.F. WITH PAINTED SHEETROCK ABOVE
C	5/8" PLYWOOD - PAINTED
D	(E) FINISH TO REMAIN - PAINT
E	(E) FINISH TO REMAIN UNCHANGED
F	FACTORY FINISH

CEILINGS	
1	SUSPENDED CEILING - DONN DX 15/16" 2'x4' T-BAR GRID W/ ARMSTRONG CORTEGA MINIBOARD LAY-IN PANELS (OR EQUAL) COLOR: WHITE. INSTALL BOTTOM OF GRID PER SCHEDULE - PROVIDE SEISMIC BRACES PER DETAILS
2	5/8" SHEETROCK
3	NO CEILING, EXPOSED TO 1/2" SOUND BOARD OVER FRAMING WITH BLACK SCRIM COVERING ABOVE
4	(E) CEILING TO REMAIN UNCHANGED
5	FACTORY FINISH
6	5/8" SHEETROCK WITH SOUND INSULATION ABOVE CEILING

FINISH NOTES:

1. GENERAL CONTRACTOR SHALL REVIEW EACH ROOM WITH TENANT AND MAKE REVISIONS TO FINISH SCHEDULE AS DIRECTED BY OWNER OR AS CONDITIONS REQUIRE FOR A PROPER AND CORRECT JOB
2. THE MAXIMUM FLAME SPREAD CLASSIFICATION OF FINISH MATERIALS USED ON THE INTERIOR WALLS AND CEILING SHALL NOT EXCEED THE REQUIREMENTS OF TABLE 803.9 OF THE 2013 CBC
3. SMOKE DENSITY OF MATERIALS SHALL BE PER 2013 CBC SECTION 803.1
4. APPLICATION OF CONTROLLED FINISHES SHALL BE IN ACCORDANCE WITH SECTION 803.11 & 805.1 OF THE 2013 CBC
5. ADHESIVES AND PAINTS SHALL BE LOW VOC

This set of plans MUST be kept on the job at all times and it is unlawful to make any changes or alterations on same without written permission from Building Safety Division, City of Modesto.
REVIEWED FOR CODE COMPLIANCE

DEC 30 2014

By_____ Permit No._____
The stamping of this plan SHALL NOT be held to permit or to be an approval of the violation of any provisions of any Ordinance or Law. Occupancy of structure not permitted until after final approval.

L Street Architects
Limited
1414 L Street
Modesto, California 95354
209-575-1415 209-575-4574 fax
www.lstreetarchitects.com

STATE OF CALIFORNIA · LICENSED ARCHITECT · ROBERT WAYNE HOWARD · C-8827 · EXPIRATION DATE 12-31-15

PROPOSED TENANT IMPROVEMENT FOR:

CENTER FOR HUMAN SERVICES

2000 W. BRIGGSMORE, SUITE I
MODESTO, CALIFORNIA 95350

REVISIONS:

DRAWN:	G. MEJIA
DATE:	11/06/2014
FILE:	216-A41
JOB:	61.216
PRINT DATE:	

FINISH SCHEDULE GROUND FLOOR

A4.1

ROOM NUMBER	ROOM NAME	FLOORS			WALLS					CEILINGS			MISCELLANEOUS		ROOM NUMBER
		FLOORING	BASE	REMARKS	NORTH	EAST	SOUTH	WEST	REMARKS	CEILING HEIGHT	CEILING	REMARKS	CABINETS	REMARKS	
140	I.T. DEPARTMENT	1	5		A	A	D	A		10'-0"	1				140
141	STORAGE	1	5		A	A	A	A		8'-0"	2				141
142	OFFICE	2	5		A	A	D	A		10'-0"	1				142
143	STORAGE	1	5		A	A	D	A		8'-0"	2				143
144	COUNSELING ROOM	2	5		A	A	A	A		10'-0"	6				144
145	COUNSELING ROOM	2	5		A	A	A	A		10'-0"	6				145
146	COUNSELING ROOM	2	5		A	A	A	A		10'-0"	6				146
147	HALLWAY	1	5		-	A	D	A		10'-0"	1				147
148	COUNSELING ROOM	2	5		A	A	A	A		10'-0"	6				148
149	COUNSELING ROOM	2	5		A	A	A	A		10'-0"	6				149
150	COUNSELING ROOM	2	5		A	A	A	A		10'-0"	6				150
151	COUNSELING ROOM	2	5		A	A	D	A		10'-0"	6				151
152	COUNSELING ROOM	2	5		A	A	D	A		10'-0"	6				152
153	COUNSELING ROOM	2	5		A	A	A	A		10'-0"	6				153
154	MEETING ROOM	2	5		A	A	A	A		10'-0"	6				154
155	MAIN STREET	1	5		E/A	A	A	A		10'-0"	1				155
156	HALLWAY	1	5		-	A	D	A		10'-0"	1				156
157	OFFICE	2	5		A	A	A	A		10'-0"	6				157
158	OFFICE	2	5		A	A	A	A		10'-0"	6				158
159	OFFICE	2	5		A	A	A	A		10'-0"	6				159
160	STORAGE	1	5		A	A	A	A		10'-0"	2				160
161	TEST	4	6		B	B	B	B		9'-0"	2				161
162	COAT	1	5		A	A	A	A		10'-0"	2				162
163	MAIN CONFERENCE	3	5		A	A	D	A		12'-0"	1				163
164	HALLWAY	1	5		A	A	A	A		10'-0"	1				164
165	SUPPLIES	1	4		A	A	A	A		10'-0"	1				165
166	CONFERENCE	3	5		A	A	A	A		10'-0"	1				166
167	UNISEX RESTROOM	4	6		B	B	B	B		9'-0"	2				167
168	UNISEX RESTROOM	4	6		B	B	B	B		9'-0"	2				168
169	HALLWAY	1	4		A	A	A	A		10'-0"	1				169
	SECOND FLOOR														
201	HALLWAY	2	5		A	A	A	-	GUARDRAIL @ OPEN WALL	-	3				201
202	ELEVATOR	2	-		F	F	F	F		-	5				202
203	CONFERENCE	2	5		A	A	A	A		9'-0"	1	10'-0" IF POSSIBLE			203
204	VISTA	2	5		A	-	A	-		9'-0"	3				204
205	CONFERENCE	2	5		A	A	A	A		10'-0"	1				205
206	UNISEX RESTROOM	4	6		B	B	B	B		9'-0"	2				206
207	STORAGE	2	5		A	A	A	A		9'-0"	2				207
208	GENERAL OFFICE	7	-		E	-	E	E		-	4				208
209	GENERAL OFFICE	7	-		E	-	E	E		-	4				209
210	OPEN OFFICE	7	-		E	-	E	E		-	4				210
211	FILES	7	-		E	E	E	-		-	4				211

FLOORS & BASES

1	SEALED & POLISHED CONCRETE
2	CARPET
3	CARPET TILES
4	CERAMIC TILE
5	RUBBER BASE
6	COVED TILE BASE
7	(E) FLOORING TO REMAIN UNCHANGED
8	STATIC DISSIPATIVE FLOORING

WALLS

A	5/8" SHEETROCK (TAPE, TEXTURE & PAINT)
B	CERAMIC TILE WAINSCOT OVER WATER-RESISTANT SHEETROCK TO 72" A.F.F. WITH PAINTED SHEETROCK ABOVE
C	5/8" PLYWOOD - PAINTED
D	(E) FINISH TO REMAIN - PAINT
E	(E) FINISH TO REMAIN UNCHANGED
F	FACTORY FINISH

CEILINGS

1	SUSPENDED CEILING - DONN DX 15/16" 2'x4' T-BAR GRID W/ ARMSTRONG CORTEGA MINIBOARD LAY-IN PANELS (OR EQUAL) COLOR: WHITE. INSTALL BOTTOM OF GRID PER SCHEDULE - PROVIDE SEISMIC BRACES PER DETAILS
2	5/8" SHEETROCK
3	NO CEILING, EXPOSED TO 1/2" SOUND BOARD OVER FRAMING WITH BLACK SCRIM COVERING ABOVE
4	(E) CEILING TO REMAIN UNCHANGED
5	FACTORY FINISH
6	5/8" SHEETROCK WITH SOUND INSULATION ABOVE CEILING

FINISH NOTES:

1. GENERAL CONTRACTOR SHALL REVIEW EACH ROOM WITH TENANT AND MAKE REVISIONS TO FINISH SCHEDULE AS DIRECTED BY OWNER OR AS CONDITIONS REQUIRE FOR A PROPER AND CORRECT JOB
2. THE MAXIMUM FLAME SPREAD CLASSIFICATION OF FINISH MATERIALS USED ON THE INTERIOR WALLS AND CEILING SHALL NOT EXCEED THE REQUIREMENTS OF TABLE 803.9 OF THE 2013 CBC
3. SMOKE DENSITY OF MATERIALS SHALL BE PER 2013 CBC SECTION 803.1
4. APPLICATION OF CONTROLLED FINISHES SHALL BE IN ACCORDANCE WITH SECTION 803.11 & 805.1 OF THE 2013 CBC
5. ADHESIVES AND PAINTS SHALL BE LOW VOC

This set of plans MUST be kept on the job at all times and it is unlawful to make any changes or alterations on same without written permission from Building Safety Division, City of Modesto.
REVIEWED FOR CODE COMPLIANCE

DEC 30 2014

By_____ Permit No._____
The stamping of this plan SHALL NOT be held to permit or to be an approval of the violation of any provisions of any Ordinance or Law. Occupancy of structure not permitted until after final approval.

L Street Architects
Limited
1414 L Street
Modesto, California 95354
209-575-1415 209-575-4374 fax
www.lstreetarchitects.com

LICENSED ARCHITECT
C-8827
RENEWAL 11/30/15
STATE OF CALIFORNIA

PROPOSED TENANT IMPROVEMENT FOR:

CENTER FOR HUMAN SERVICES

2000 W. BRIGGSMORE, SUITE 1
MODESTO, CALIFORNIA 95350

REVISIONS:

DRAWN:	G. MEJIA
DATE:	11/06/2014
FILE:	216-A42
JOB:	61.216
PRINT DATE:	

FINISH SCHEDULE GROUND & SECOND FLOOR

A4.2

FINISH SCHEDULE - GROUND & SECOND FLOORS

DOOR NUMBER	SIZE DOOR	TYPE	DOOR MATERIAL	DOOR FACE	DOOR FINISH	FRAME MATERIAL	FRAME FINISH	RATING	REMARKS	HARD-WARE GROUP	DOOR NUMBER
101.1	3070	A	SC	WOOD	STAIN	TIMELY	FACTORY		CARD READER WITH PANIC HARDWARE	5	101.1
101.2	(E) PR-3070								INSTALL PANIC HARDWARE	5	101.2
103.1	3070	A	SC	WOOD	STAIN	TIMELY	FACTORY			2	103.1
104.1	3070-DUTCH	B	SC	WOOD	PAINT	TIMELY	FACTORY			1	104.1
104.2	3070-DUTCH	B	SC	WOOD	PAINT	TIMELY	FACTORY			1	104.2
106.1	3070	A	SC	WOOD	STAIN	TIMELY	FACTORY			1	106.1
107.1	(E) PR-3070								INSTALL PANIC HARDWARE	5	107.1
108.1	3070	C	SC	WOOD	STAIN	TIMELY	FACTORY			1	108.1
109.1	3070	C	SC	WOOD	STAIN	TIMELY	FACTORY			1	109.1
110.1	3070	C	SC	WOOD	STAIN	TIMELY	FACTORY			1	110.1
111.1	3070	C	SC	WOOD	STAIN	TIMELY	FACTORY			1	111.1
112.1	3070	C	SC	WOOD	STAIN	TIMELY	FACTORY			1	112.1
113.1	3070	C	SC	WOOD	STAIN	TIMELY	FACTORY			1	113.1
114.1	3070	C	SC	WOOD	STAIN	TIMELY	FACTORY			1	114.1
117.1	PR-3070	D	SC	WOOD	STAIN	TIMELY	FACTORY			4	117.1
118.1	3070	A	SC	WOOD	STAIN	TIMELY	FACTORY			2	118.1
118.2	3070	A	SC	WOOD	STAIN	TIMELY	FACTORY			2	118.2
119.1	3070	A	SC	WOOD	STAIN	TIMELY	FACTORY			2	119.1
120.1	3070	C	SC	WOOD	STAIN	TIMELY	FACTORY			1	120.1
121.1	3070	C	SC	WOOD	STAIN	TIMELY	FACTORY			1	121.1
125.1	3070	A	SC	WOOD	STAIN	TIMELY	FACTORY			1	125.1
128.1	(E) PR-3070								CARD READER WITH PANIC HARDWARE	5	128.1
132.1	(E) 3070								INSTALL PANIC HARDWARE	5	132.1
138.1	3070	C	SC	STEEL	PAINT	METAL	PAINT			1	138.1
139.1	(E) 3070								CARD READER WITH PANIC HARDWARE	5	139.1
140.1	3070	A	SC	WOOD	STAIN	TIMELY	FACTORY			1	140.1
141.1	3070	C	SC	WOOD	STAIN	TIMELY	FACTORY			1	141.1
142.1	3070	E	SC	WOOD	STAIN	TIMELY	FACTORY			1	142.1
143.1	3070	C	SC	WOOD	STAIN	TIMELY	FACTORY			1	143.1
144.1	3070	E	SC	WOOD	STAIN	TIMELY	FACTORY			1	144.1
145.1	3070	E	SC	WOOD	STAIN	TIMELY	FACTORY			1	145.1
146.1	3070	E	SC	WOOD	STAIN	TIMELY	FACTORY			1	146.1
148.1	3070	E	SC	WOOD	STAIN	TIMELY	FACTORY			1	148.1
149.1	3070	E	SC	WOOD	STAIN	TIMELY	FACTORY			1	149.1
150.1	3070	E	SC	WOOD	STAIN	TIMELY	FACTORY			1	150.1
151.1	3070	E	SC	WOOD	STAIN	TIMELY	FACTORY			1	151.1
152.1	3070	E	SC	WOOD	STAIN	TIMELY	FACTORY			1	152.1
153.1	3070	E	SC	WOOD	STAIN	TIMELY	FACTORY			1	153.1
154.1	3070	E	SC	WOOD	STAIN	TIMELY	FACTORY			2	154.1
157.1	3070	E	SC	WOOD	STAIN	TIMELY	FACTORY			1	157.1
158.1	3070	E	SC	WOOD	STAIN	TIMELY	FACTORY			1	158.1
159.1	3070	E	SC	WOOD	STAIN	TIMELY	FACTORY			1	159.1
160.1	3070	C	SC	WOOD	STAIN	TIMELY	FACTORY			1	160.1
161.1	3070	C	SC	WOOD	STAIN	TIMELY	FACTORY			3	161.1
162.1	3070	C	SC	WOOD	STAIN	TIMELY	FACTORY			1	162.1
163.1	(E) PR-3070								INSTALL PANIC HARDWARE	5	163.1
164.1	3070	A	SC	WOOD	STAIN	TIMELY	FACTORY		INSTALL PANIC HARDWARE	5	164.1
165.1	3070	B	SC	WOOD	STAIN	TIMELY	FACTORY			1	165.1
166.1	3070	A	SC	WOOD	STAIN	TIMELY	FACTORY			2	166.1
166.2	3070	A	SC	WOOD	STAIN	TIMELY	FACTORY			2	166.2
167.1	3070	C	SC	WOOD	STAIN	TIMELY	FACTORY			3	167.1
168.1	3070	C	SC	WOOD	STAIN	TIMELY	FACTORY			3	168.1
169.1	3070	A	SC	WOOD	STAIN	TIMELY	FACTORY			2	169.1
169.2	3070	A	SC	WOOD	STAIN	TIMELY	FACTORY			1	169.2
	2ND FLOOR										
203.1	3070	A	SC	WOOD	STAIN	TIMELY	FACTORY			2	203.1
205.1	PR-3070	F	SC	WOOD	STAIN	TIMELY	FACTORY			4	205.1
206.1	3070	C	SC	WOOD	STAIN	TIMELY	FACTORY			3	206.1
207.1	3070	C	SC	WOOD	STAIN	TIMELY	FACTORY			1	207.1

HARDWARE LISTED ARE FROM THE FOLLOWING MANUFACTURERS

CAL-ROYAL LOCKS	C
HAGER HINGE COMPANY	H
LETTERLAND SIGN COMPANY	L
GRANT	G
NORTON CLOSURERS	N
QUALITY HARDWARE	Q
REESE ENTERPRISES	R
SCHLAGE LOCK COMPANY	S
PEMKO	P
SARGENT	SA
Kaba Ilco Corp.	K

GROUP #1 -

1 1/2 PR BB1279 4-1/2 x 4-1/2	613	H
1 EA. GN600 LOCKSET	613	C
1 EA. W302PT WALL STOP	613	Q

GROUP #2 -

1 1/2 PR BB1279 4-1/2 x 4-1/2	613	H
1 EA. GN630 PASSAGE SET	613	C
1 EA. W302PT WALL STOP	613	Q

GROUP #3 -

1 1/2 PAIR BB1279 4 1/2"x4 1/2"	613	H
1 EA. CGN20 APPOLO PRIVACY	613	C
1 EA. 8501 BF CLOSER	613	N
1 EA. 331ES FLOOR STOP	613	Q
1 EA. SIGN H.C. TOILETS - BLUE		L

GROUP #4 -

3 PAIR BB1279 4-1/2 x 4-1/2	613	H
1 SET FB-8 FLUSH BOLTS	613	G
1 EA. LX00 LOCKSET	613	C
1 EA. LX40 DUMMY TRIM	613	C
2 EA. 8501 BF CLOSER	613	N
2 EA. W302PT WALL STOP	613	Q

GROUP # 5

1 1/2 PR BB1279 4 1/2 X 4 1/2	613	H
1 EA. SIMPLEX 5031	613	K
1 EA. 8501 BF CLOSER	613	N
1 EA. 144 FLOOR STOP	613	Q
1 PANIC HARDWARE 10 8800 F LESS TRIM x 827	613	SA

This set of plans MUST be kept on the job at all times and it is unlawful to make any changes or alterations on same without written permission from Building Safety Division, City of Modesto.
REVIEWED FOR CODE COMPLIANCE
DEC 30 2014
By_____ Permit No._____
The stamping of this plan SHALL NOT be held to permit or to be an approval of the violation of any provisions of any Ordinance or Law. Occupancy of structure not permitted until after final approval.

DOOR NOTES:

1. SUBMIT FINAL HARDWARE GROUPING TO ARCHITECT FOR REVIEW
2. ALL EXIT DOORS ARE OPENABLE FROM THE INSIDE WITHOUT KEY, OR SPECIAL KNOWLEDGE OR EFFORT.
3. ALL DOORS SHALL HAVE ACCESSIBLE HARDWARE - LEVER TYPE WHERE APPLICABLE.
4. THRESHOLDS: 1/2" MAXIMUM WITH 1:2 BEVELED EDGE
5. THE BOTTOM 10" OF DOORS SHALL HAVE A SMOOTH, UNINTERRUPTED SURFACE ON THE PUSH SIDE TO ALLOW OPENING BY A WHEELCHAIR FOOTREST
6. MAXIMUM DOOR OPENING EFFORTS:
   5.0 POUNDS @ EXTERIOR
   5.0 POUNDS @ INTERIOR
7. REUSE EXISTING DOORS WHERE POSSIBLE. REFINISH DOORS WITH STAIN AND HARDWARE TO MATCH EXISTING
8. REQUIRED FIRE-RESISTIVE OPENINGS SHALL BE SELF-CLOSING WITH SMOKE AND DRAFT CONTROL ASSEMBLIES.
9. FLOOR MOUNTED DOOR STOPS TO BE INSTALLED 4" MAX. FROM FACE OF WALL OR PARTITIONS.
10. DOOR CLOSERS AND GATE CLOSERS SHALL BE ADJUSTED SO THAT FORM AN OPEN POSITION OF 90 DEGREES, THE TIME REQUIRED TO MOVE THE DOOR TO A POSITION OF 12 DEGREES FROM THE LATCH IS 5 SECONDS MINIMUM PER CBC 11B-404.2.8.1
11. FIELD VERIFY CONDITION OF EXISTING DOORS, FRAMES & HARDWARE. REUSE EXISTING THAT ARE IN GOOD CONDITION WHERE POSSIBLE. SEE DEMOLITION PLAN FOR REFERENCE.

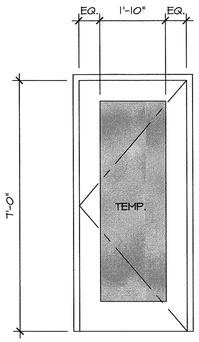

(A) INT. DOOR

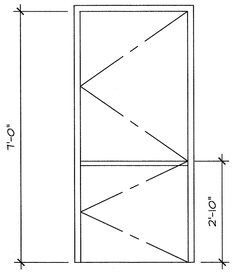

(B) INT. DUTCH DOOR

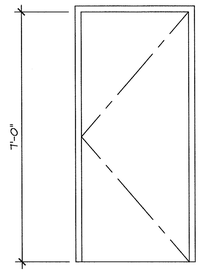

(C) INT. DOOR

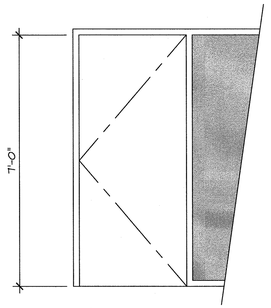

(E) INT. DOOR

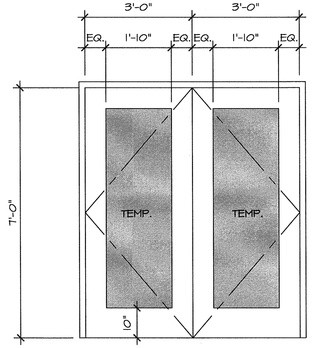

(F) INT. DOORS

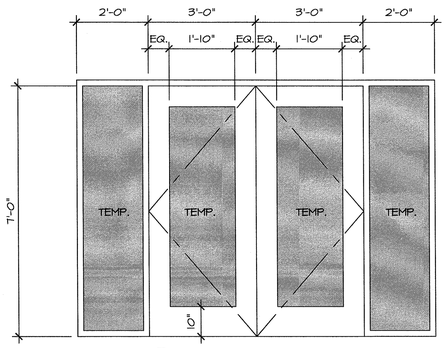

(D) INT. DOORS

L Street Architects
L i m i t e d
1414 L Street
Modesto, California 95354
209-575-1415 209-575-4574 fax
www.lstreetarchitects.com

LICENSED ARCHITECT
RICHARD L. PARADISE
C-8827
RENEWAL 11/30/15
STATE OF CALIFORNIA

PROPOSED TENANT IMPROVEMENT FOR:

CENTER FOR HUMAN SERVICES

2000 W. BRIGGSMORE, SUITE 1
MODESTO, CALIFORNIA 95350

REVISIONS:
1 12/09/14 BLDG. REV

DRAWN:	G. MEJIA
DATE:	11/06/2014
FILE:	216-A43
JOB:	61.216
PRINT DATE:	

DOOR SCHEDULE GROUND & 2ND FLOOR

A4.3

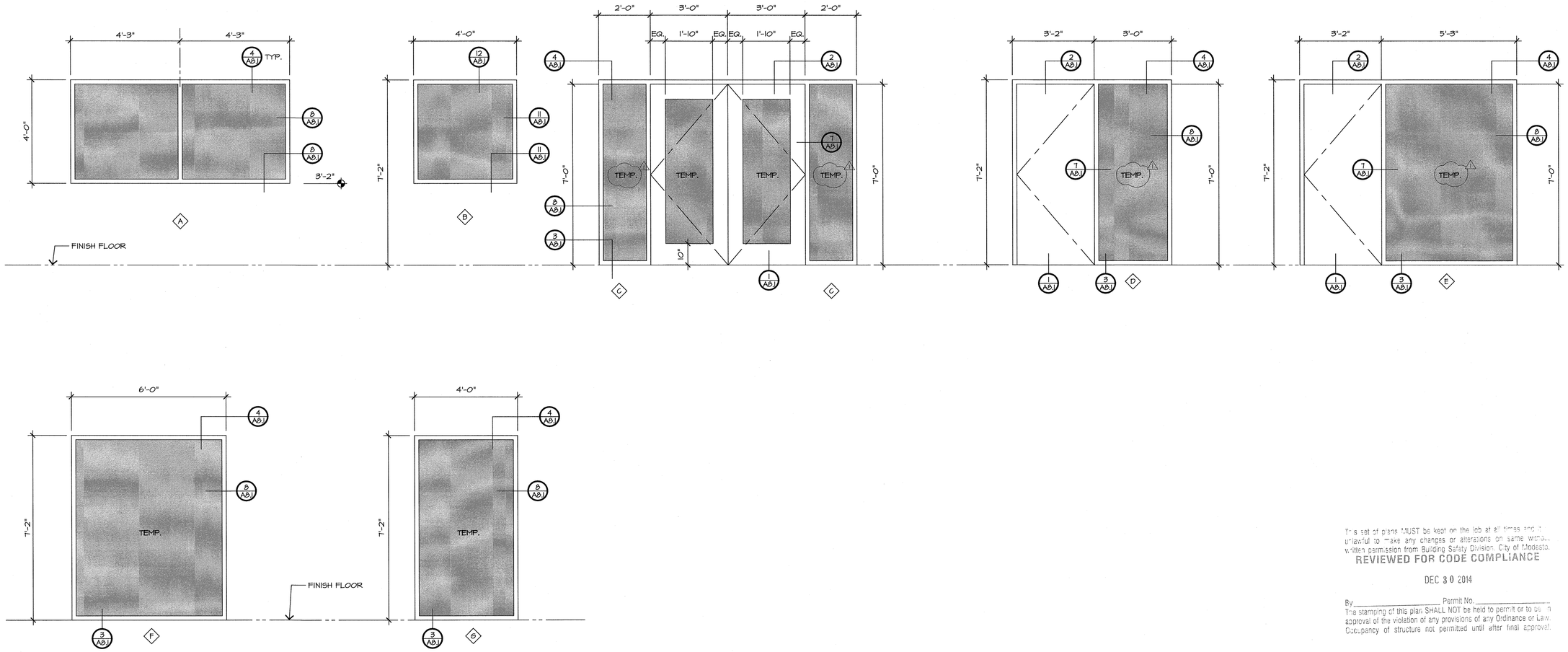

This set of plans MUST be kept on the job at all times and it is unlawful to make any changes or alterations on same without written permission from Building Safety Division, City of Modesto.

REVIEWED FOR CODE COMPLIANCE

DEC 30 2014

By_____ Permit No._____

The stamping of this plan SHALL NOT be held to permit or to be an approval of the violation of any provisions of any Ordinance or Law. Occupancy of structure not permitted until after final approval.

17 | 1/2" | **WINDOW SCHEDULE GROUND AND 2ND FLOOR**

L Street Architects
Limited
1414 L Street
Modesto, California 95354
209-575-1415 209-575-4374 Fax
www.lstreetarchitects.com

STATE OF CALIFORNIA · LICENSED ARCHITECT · ROBERT J. DEPASSE · C-18277 · RENEWAL 1/30/15

PROPOSED TENANT IMPROVEMENT FOR:

CENTER FOR HUMAN SERVICES

2000 W. BRIGGSMORE SUITE I
MODESTO, CALIFORNIA 95350

REVISIONS:
1 12/09/14 BLDG. REV

DRAWN:	G. MEJIA
DATE:	11/06/2014
FILE:	216-A44
JOB:	61.216
PRINT DATE:	

WINDOW SCHEDULE GROUND & 2ND FLOOR

A4.4

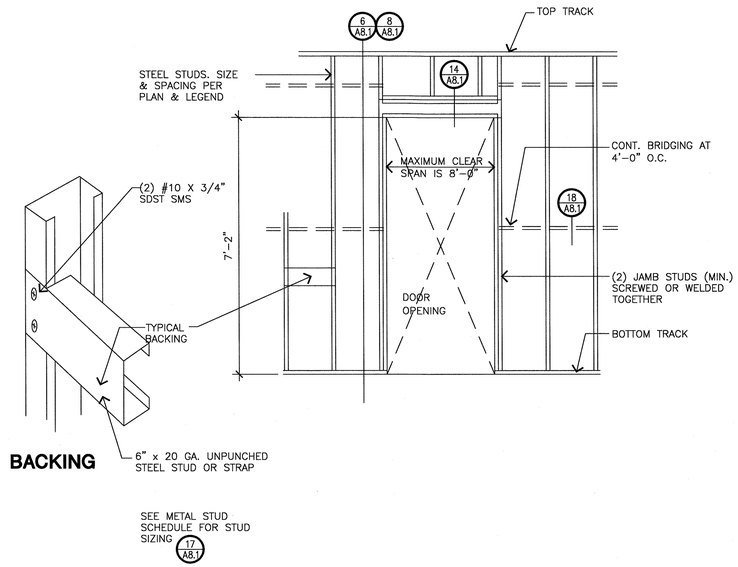

19 N.T.S. **TYPICAL METAL STUD FRAMING**

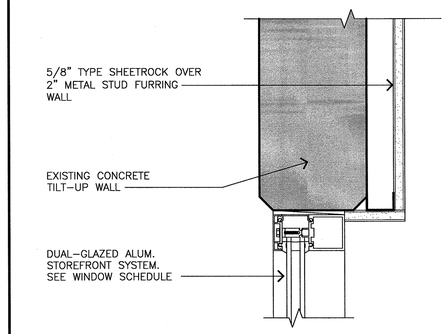

12 3" **STOREFRONT WIN. HEAD**

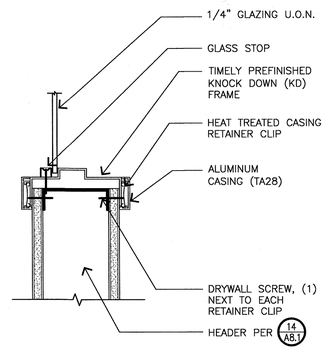

8 3" **TIMELY LITE @ JAMB/SILL**

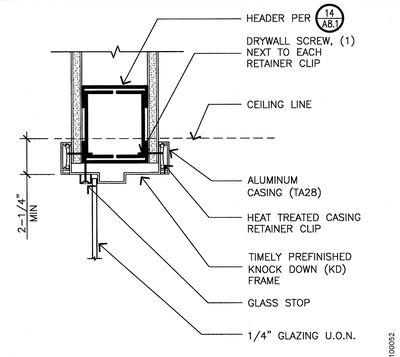

4 3" **TIMELY LITE @ HEAD**

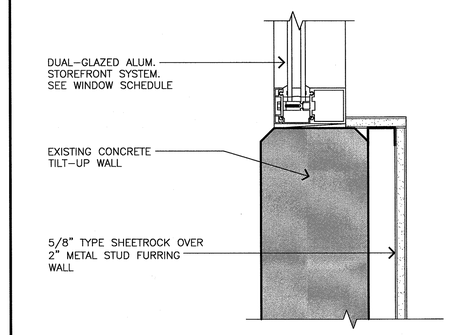

11 3" **STOREFRONT WIN. JAMB/SILL**

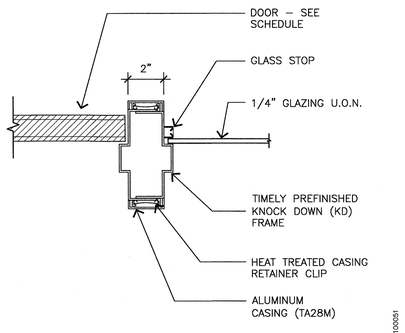

7 3" **TIMELY MULLION**

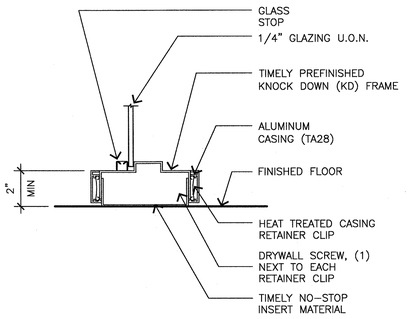

3 3" **TIMELY SILL**

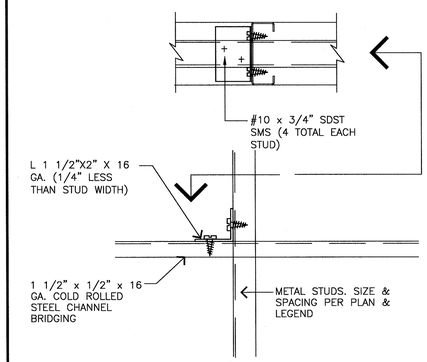

18 3" **WALL BRIDGING**

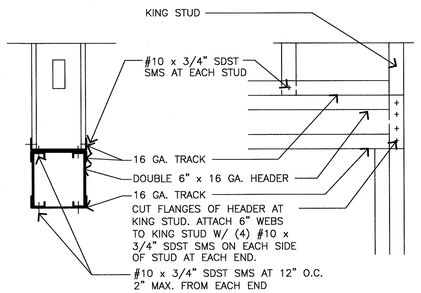

14 1 1/2" **FRAMING @ HEADER**

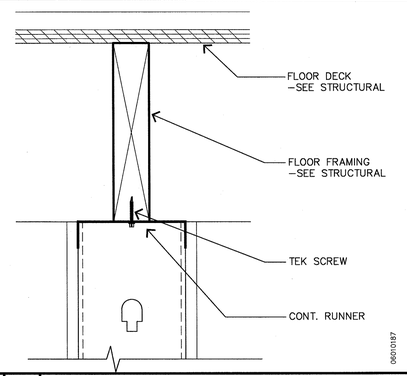

10 3" **WALL @ FLOOR DECK**

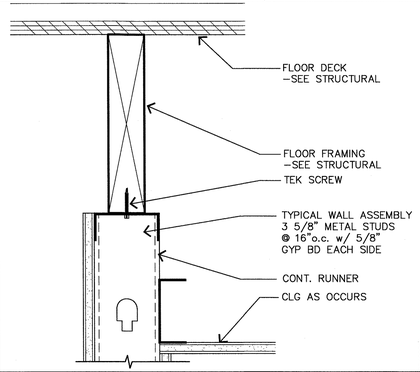

6 3" **PARTITION @ CLG**

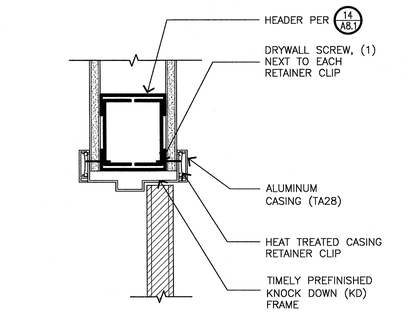

2 3" **INTERIOR DR FRAME**

METAL STUD SCHEDULE	
MAX. HT OF WALL	STUD SIZE
14'-4"	3 5/8" X 25 GA.
16'-5"	3 5/8" X 20 GA.
18'-0"	3 5/8" X 18 GA.
19'-7"	3 5/8" X 16 GA.
20'-0"	3 5/8" X 14 GA.

NOTES:

1. ATTACH STUDS TO SLIP TRACK AND TRACK W/ ONE NO. 12-14 SCREW EA. MTL STUD FLANGE. (4 SCREWS TOTAL EA. MTL. STUD)
2. ATTACH SHEET ROCK TO METAL STUDS W/ #6-20X1" BUGLE HEAD TYPE S-12 SCREW. SPACE SCREWS AT 6" O.C. AT EDGES AND 12" O.C. IN FIELD.
3. STUDS SPACED AT 16" O.C.
4. MAX WALL HEIGHT: 5 PSF AT L/240
5. STEEL 33 KSI EXCEPT 16 GA. & 14 GA. 50 KSI

17 N.T.S. **METAL STUD SCHEDULE**

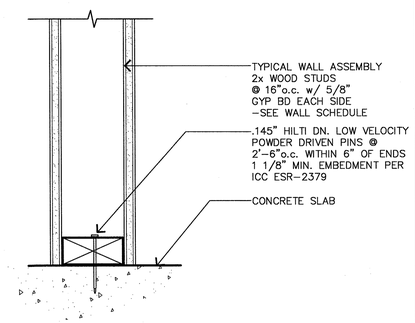

9 3" **PARTITION @ SILL**

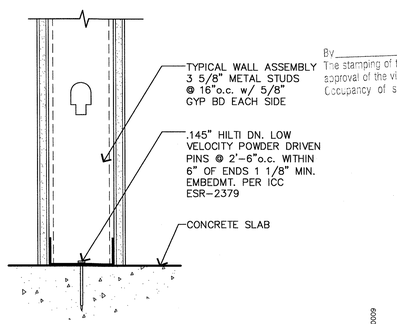

5 3" **PARTITION @ SILL**

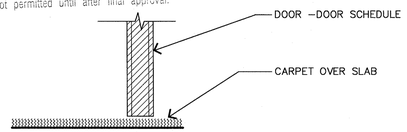

1 3" **DOOR SILL**

This set of plans MUST be stamped and signed by the Building Official prior to issuance of any permit or commencement of any work. Unauthorized use of these plans is unlawful without written permission from the Building Safety Division, City of Modesto.

REVIEWED FOR CODE COMPLIANCE

DEC 30 2014

By _____ Permit No. _____

The stamping of this plan SHALL NOT be held to permit or to be an approval of the violation of any provisions of any Ordinance or Law. Occupancy of structure not permitted until after final approval.

L Street Architects
Limited
1414 L Street
Modesto, California 95354
209-575-1415 209-575-4374 fax
www.lstreetarchitects.com

STATE OF CALIFORNIA · LICENSED ARCHITECT · ROBERT J. CLARKE · C-8827 · RENEWAL 12/31/15

PROPOSED TENANT IMPROVEMENT FOR:

CENTER FOR HUMAN SERVICES

2000 W. BRIGGSMORE, SUITE I
MODESTO, CALIFORNIA 95350

REVISIONS:

DRAWN:	G. MEJIA
DATE:	11/06/2014
FILE:	216-A81
JOB:	61.216
PRINT DATE:	

DETAILS

A8.1

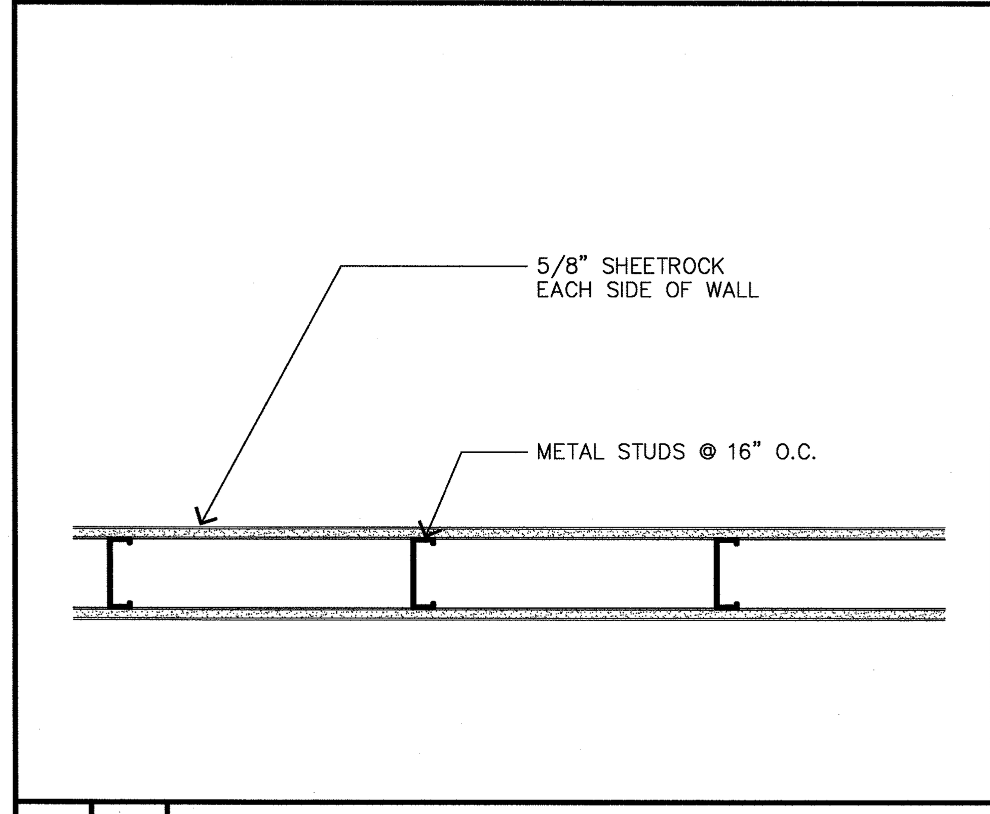

20 | 1 1/2" | **TYPICAL WALL**

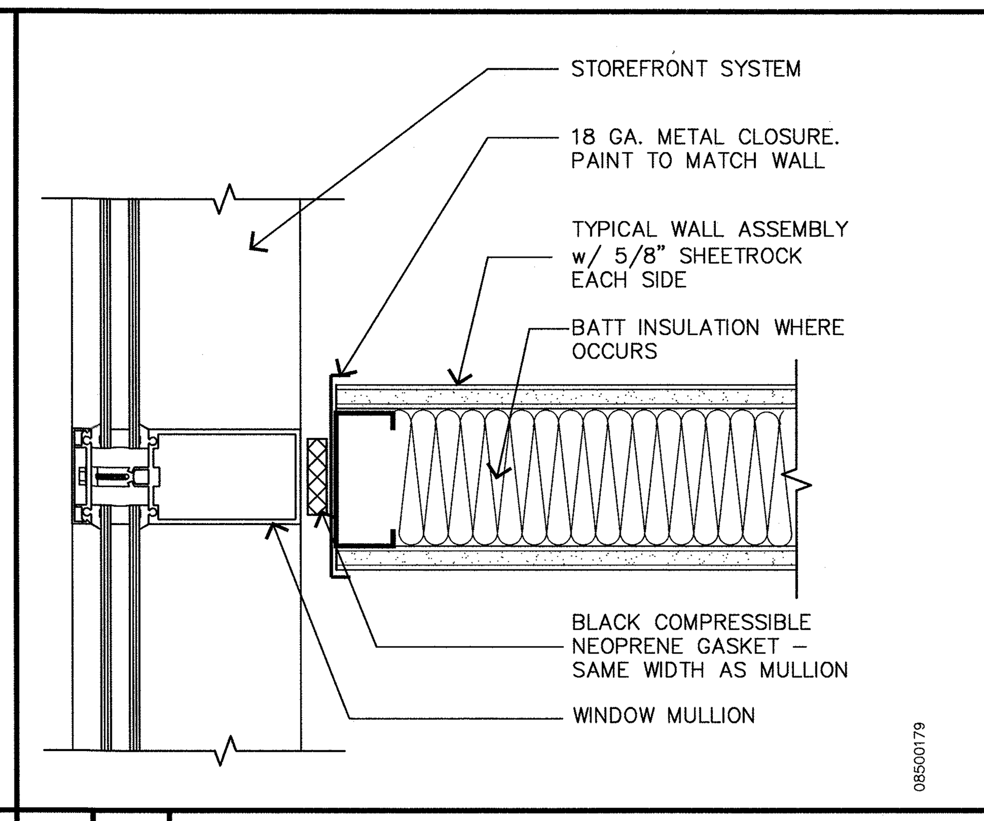

16 | 3" | **PARTITION @ WIN MULLION**

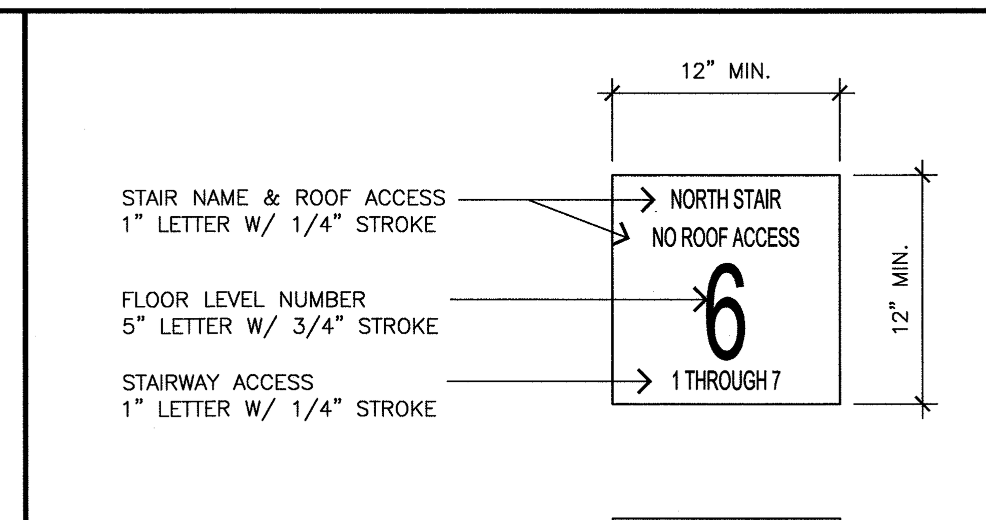

SIGN SHALL BE OF DURABLE MATERIAL & TO BE INSTALLED 48" AFF AT EACH STAIRWAY FLOOR LANDING. LETTERING TO BE IN SHARP CONTRAST TO BACKGROUND

13 | NTS | **STAIRWELL ID SIGN**

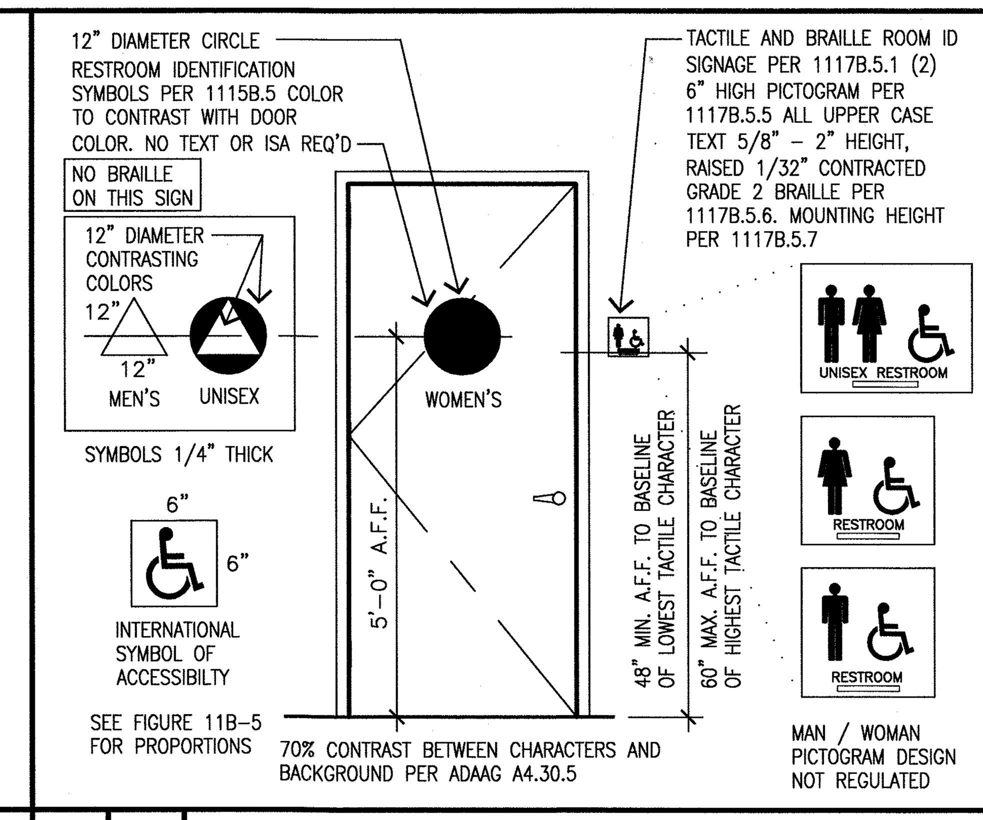

8 | N.T.S. | **TOILET ROOM SIGNAGE**

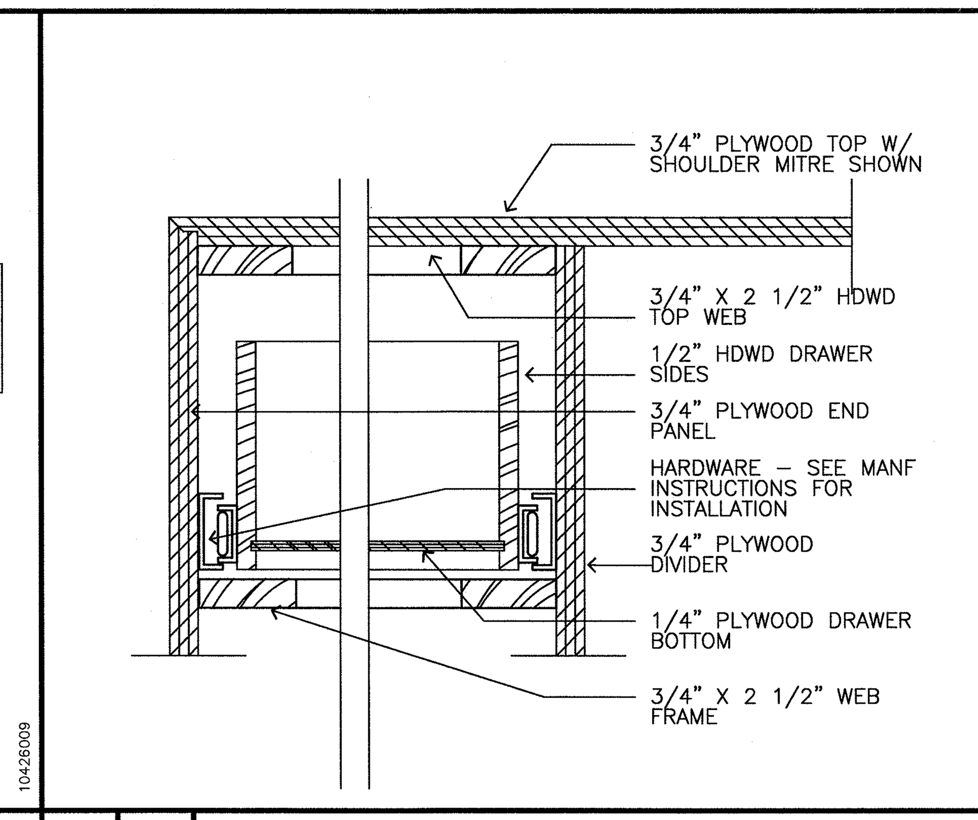

4 | 3" | **DRAWER SECTION**

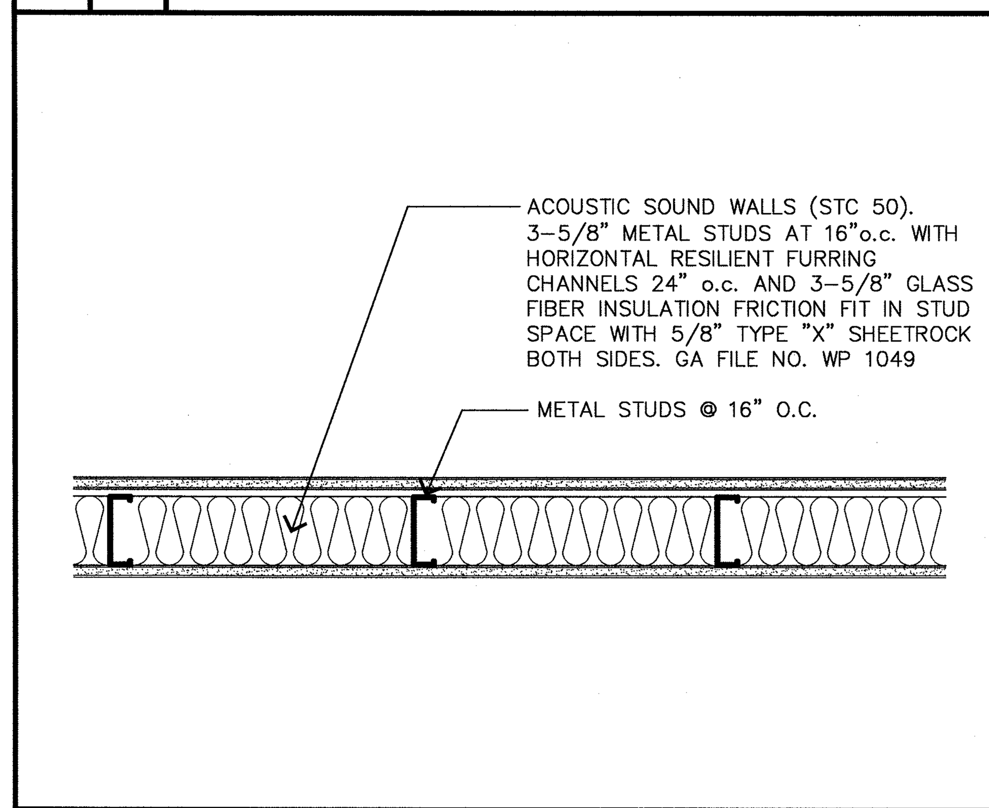

19 | 1 1/2" | **ACOUSTIC WALL**

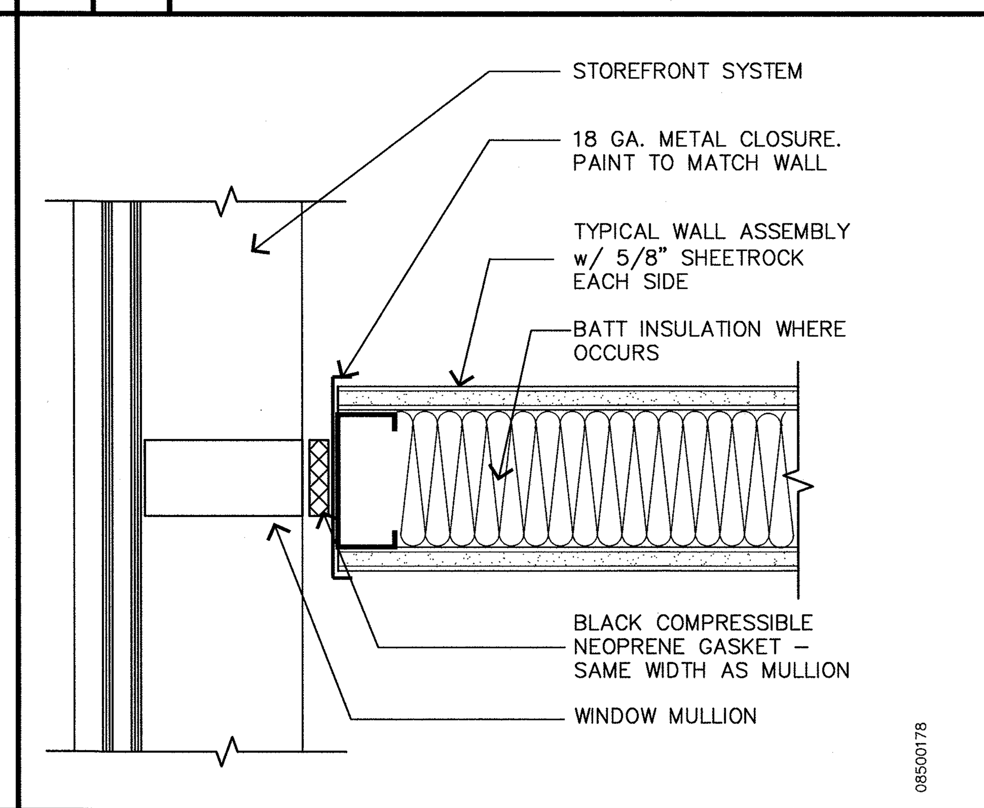

15 | 3" | **PARTITION @ GLAZING**

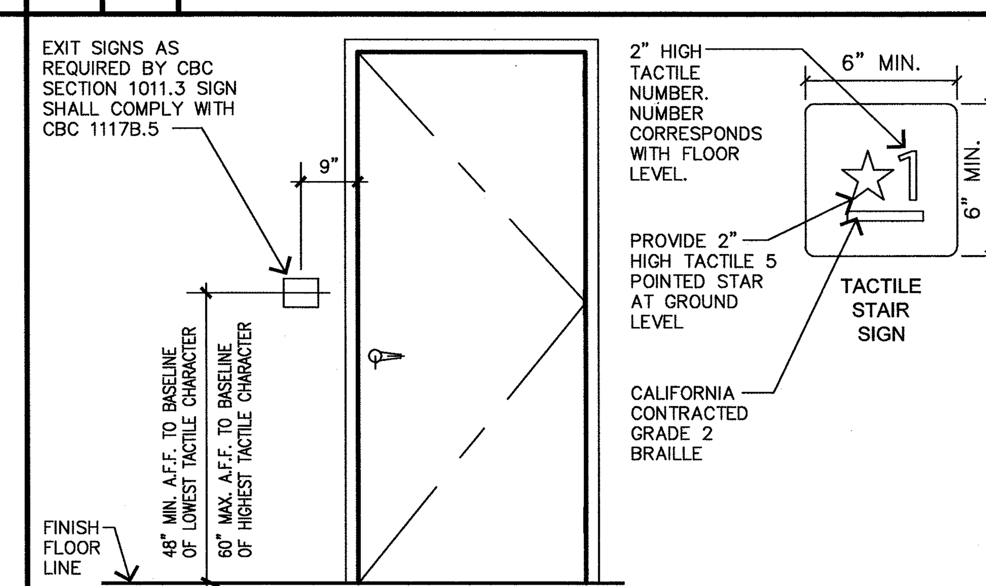

BRAILLE SYMBOLS: CALIFORNIA CONTRACTED GRADE 2 BRAILLE SHALL BE USED WHEREVER BRAILLE SYMBOLS ARE SPECIFICALLY REQUIRED IN OTHER PORTIONS OF THESE STANDARDS. DOTS SHALL BE 1/10 INCH ON CENTERS IN EACH CELL WITH 2/10 INCH SPACE BETWEEN CELLS. DOTS SHALL BE RAISED A MIN. OF 1/40 INCH ABOVE THE BACKGROUND. BRAILLE SYMBOLS SHALL BE PLACED WITHIN 3/8" MIN. TO 1/2" MAX. BENEATH RAISED TACTILE CHARACTERS PER CBC 1117B.5.6

11 | N.T.S. | **TACTILE STAIR SIGN**

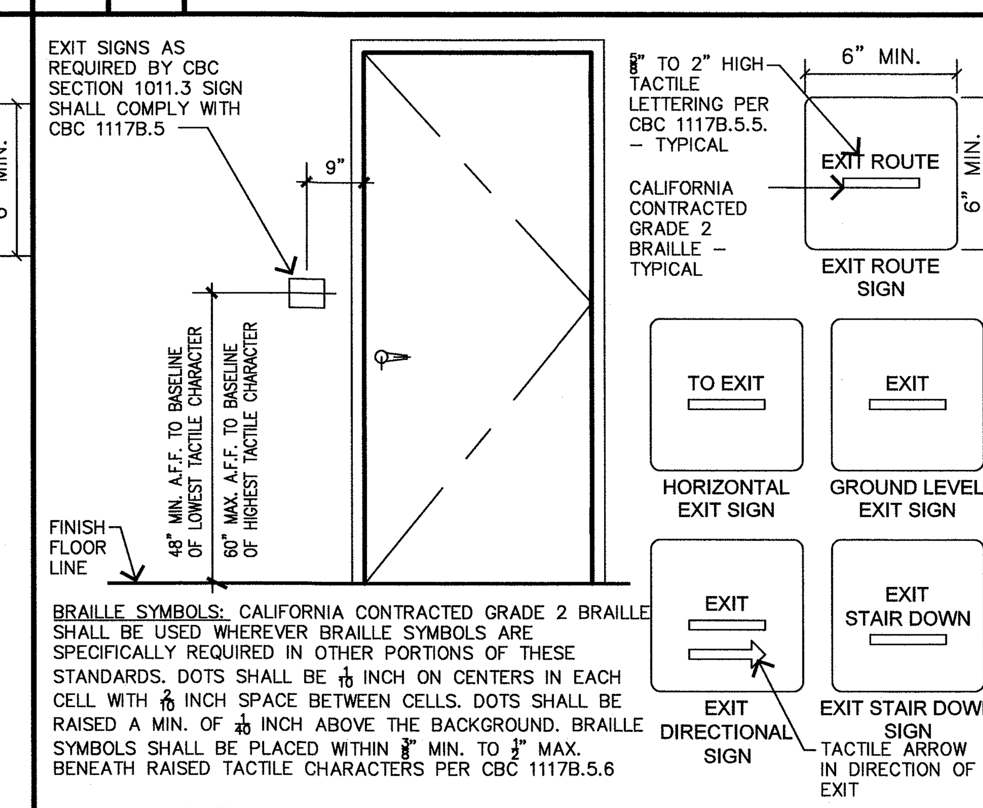

BRAILLE SYMBOLS: CALIFORNIA CONTRACTED GRADE 2 BRAILLE SHALL BE USED WHEREVER BRAILLE SYMBOLS ARE SPECIFICALLY REQUIRED IN OTHER PORTIONS OF THESE STANDARDS. DOTS SHALL BE 1/10 INCH ON CENTERS IN EACH CELL WITH 2/10 INCH SPACE BETWEEN CELLS. DOTS SHALL BE RAISED A MIN. OF 1/40 INCH ABOVE THE BACKGROUND. BRAILLE SYMBOLS SHALL BE PLACED WITHIN 3/8" MIN. TO 1/2" MAX. BENEATH RAISED TACTILE CHARACTERS PER CBC 1117B.5.6

7 | N.T.S. | **BRAILLE EXIT SIGNAGE**

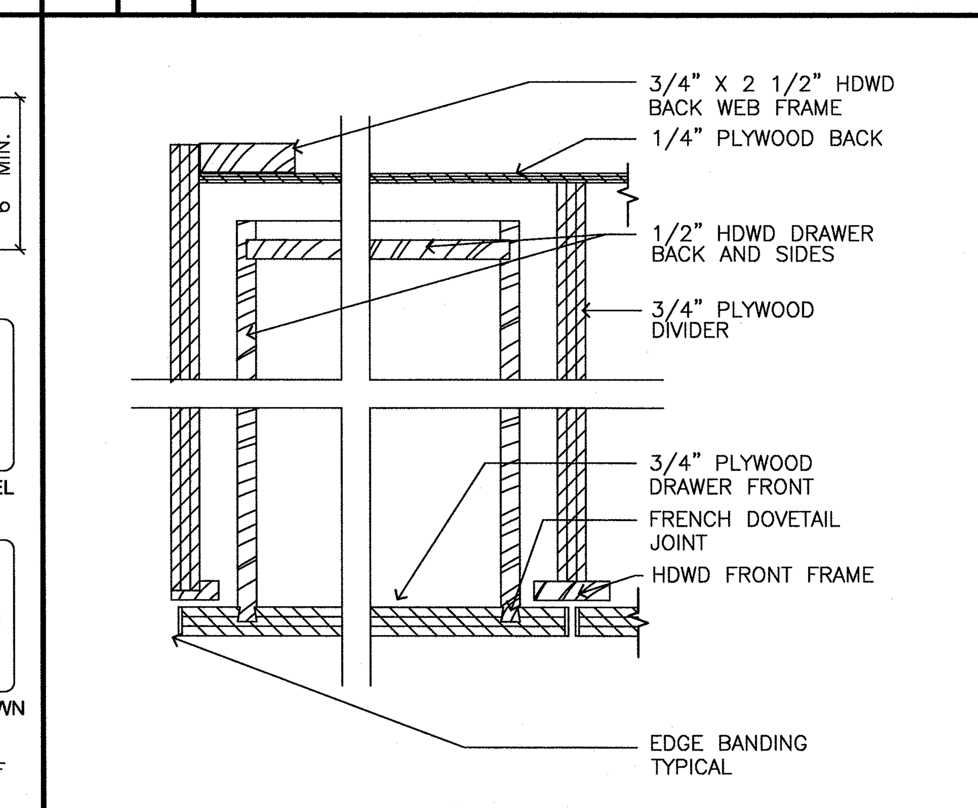

3 | 3" | **DRAWER PLAN**

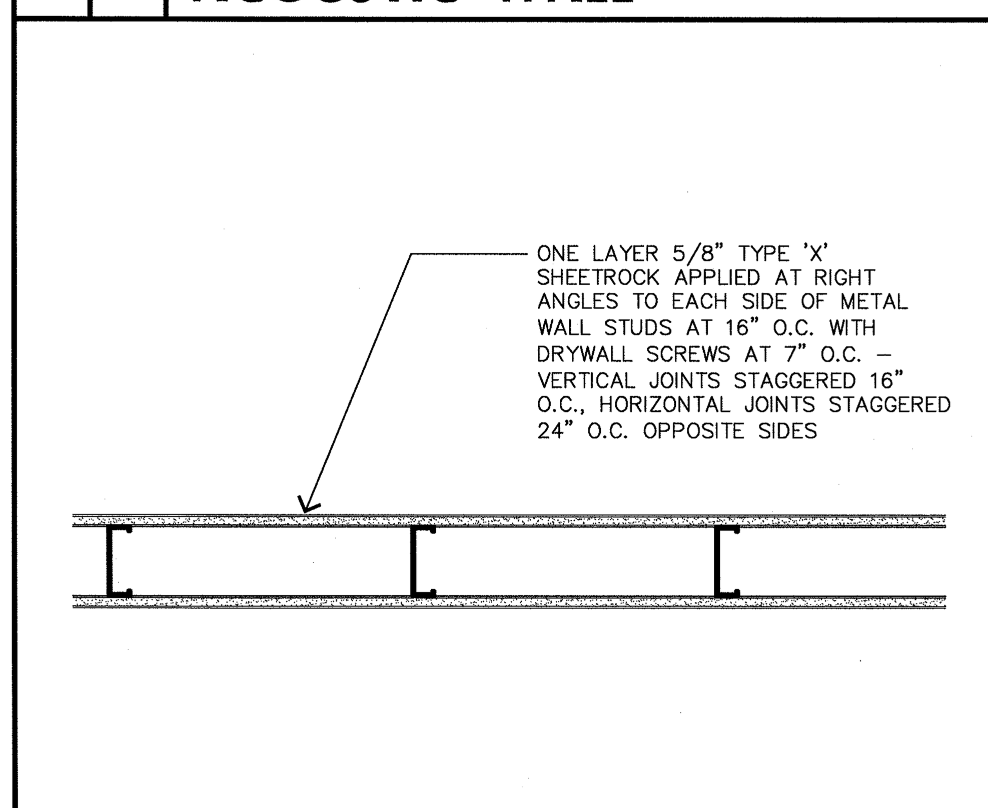

18 | 1 1/2" | **ONE HOUR RATED WALL**

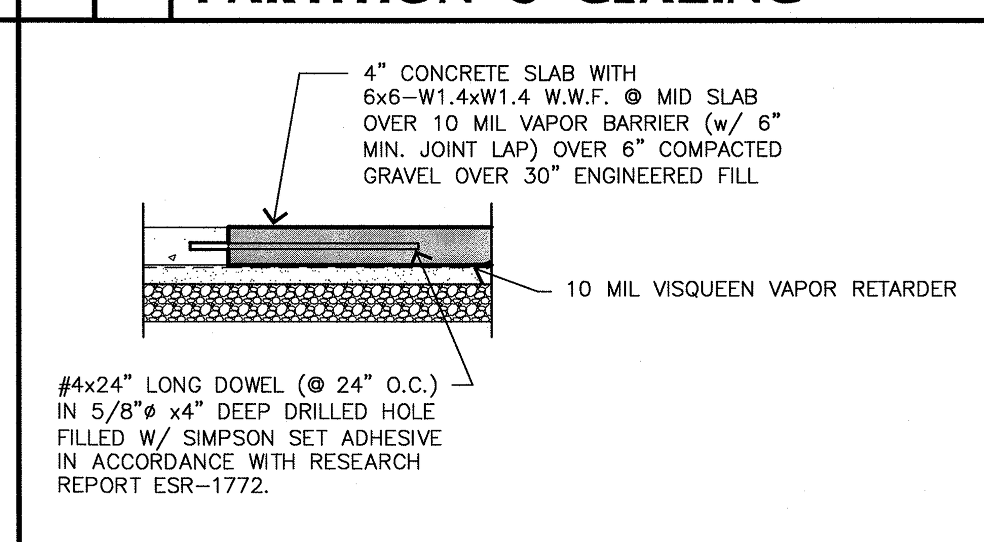

NOTE:
– HOLES MUST BE DRILLED USING A DRILL THAT IS SET IN EITHER ROTATION–AND–HAMMERING OR ROTATION ONLY MODE AND THAT THAT HAS A CARBIDE–TIPPED DRILL BIT THAT COMPLIES WITH ANSI B212.15.

– HOLES MUST BE CLEANED OF DUST AND DEBRIS, USING A WIRE BRUSH AND OIL–FREE COMPRESSED AIR AS REQUIRED TO REMOVE PARTICULATE DEBRIS AND ACHIEVE A RELATIVELY DUST–FREE BONDING SURFACE.

– CONCRETE TYPE: 2500 P.S.I. TYPE I OR TYPE II

14 | 3/4" | **SLAB REPLACEMENT**

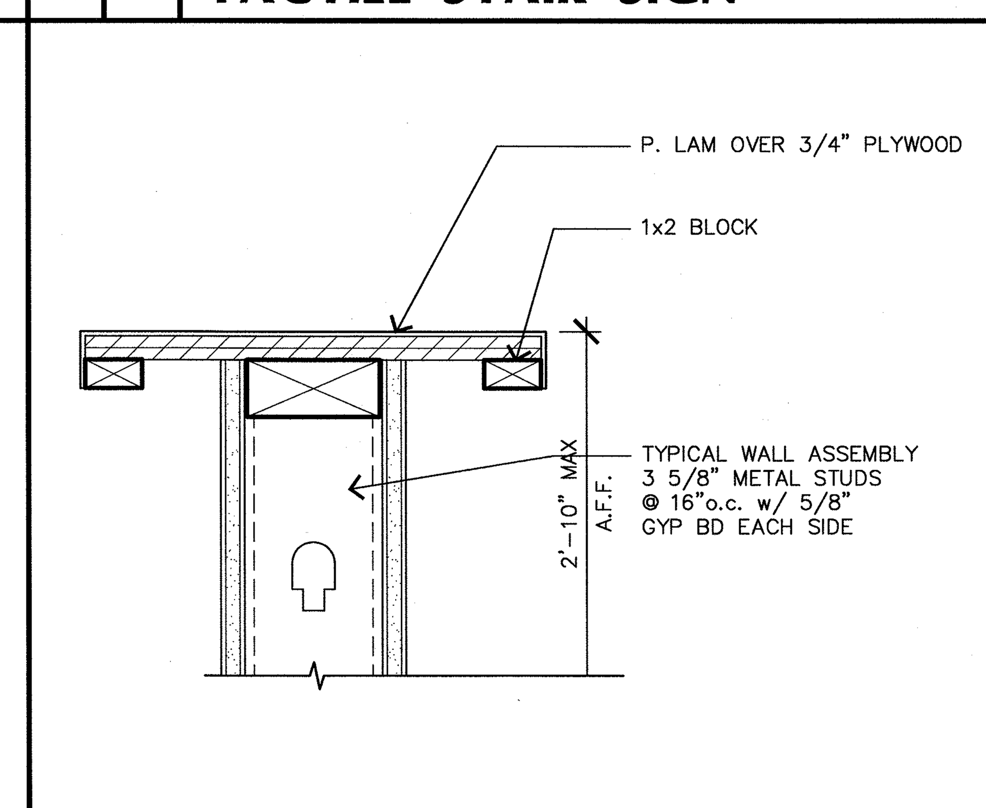

10 | 3" | **SUPPLIES COUNTER**

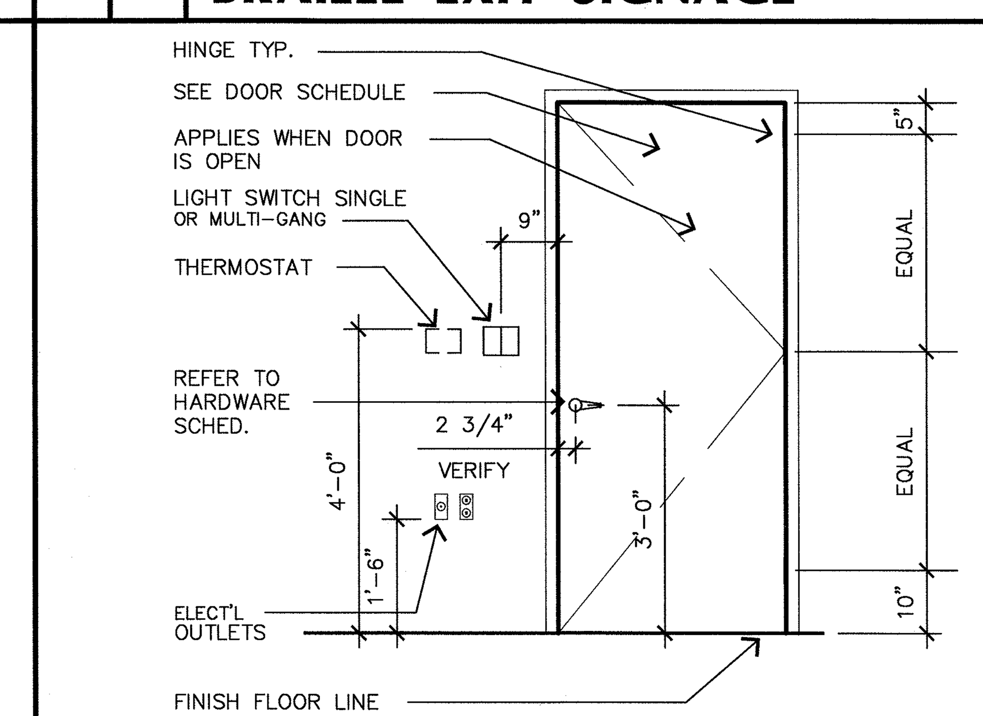

NOTE: INSTALL LOCAL ELECTRICAL AND TELEPHONE WALL OUTETS AND SWITCH PLATES AT NEAREST STUD FROM SCALED LOCATION ON PLAN UNLESS SPECIFICALLY DIMENSIONED

6 | 1 1/2" | **INSTALLATION HEIGHTS**

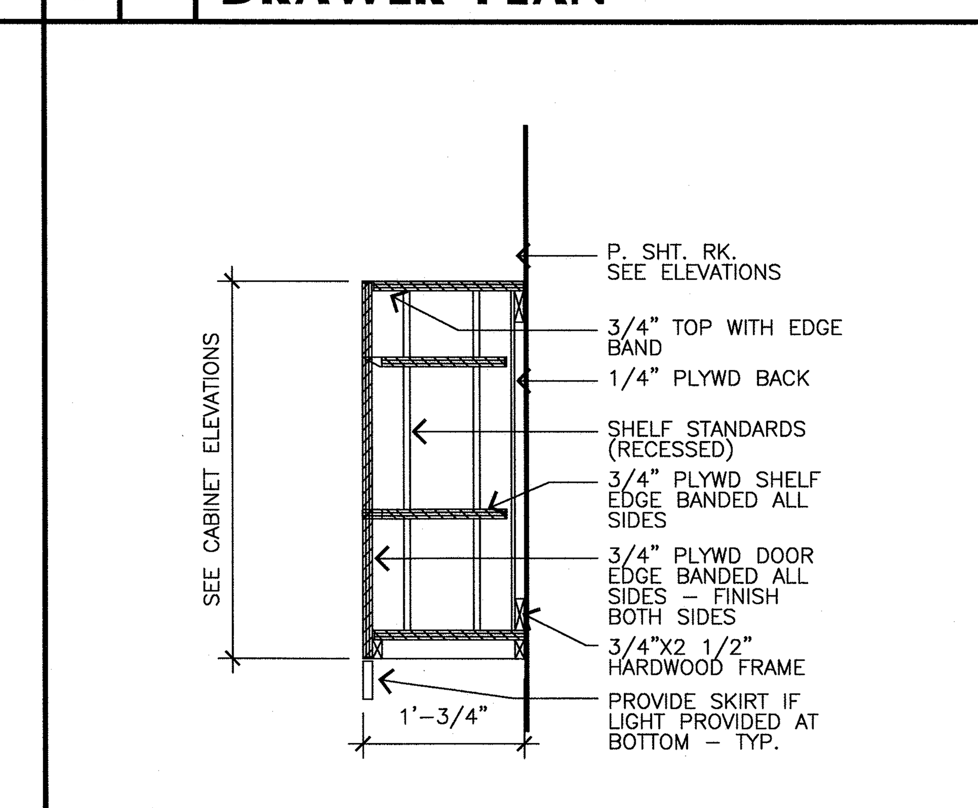

2 | N.T.S. | **WALL CABINET DETAIL**

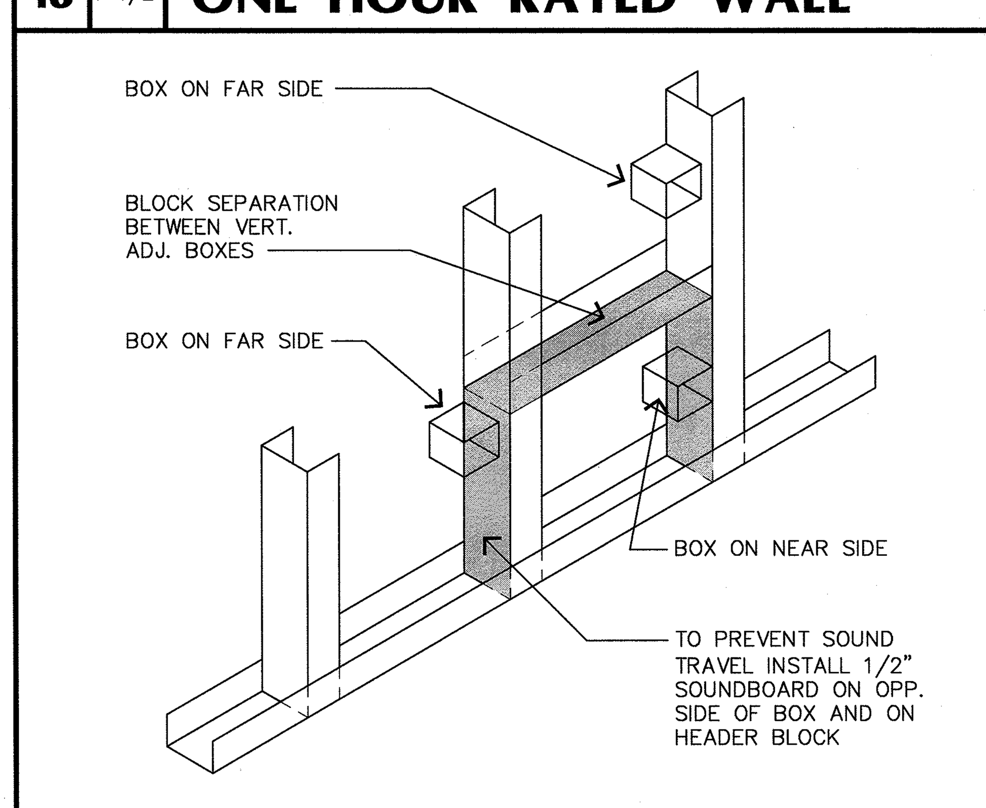

17 | 3" | **OUTLETS AT SOUND WALL**

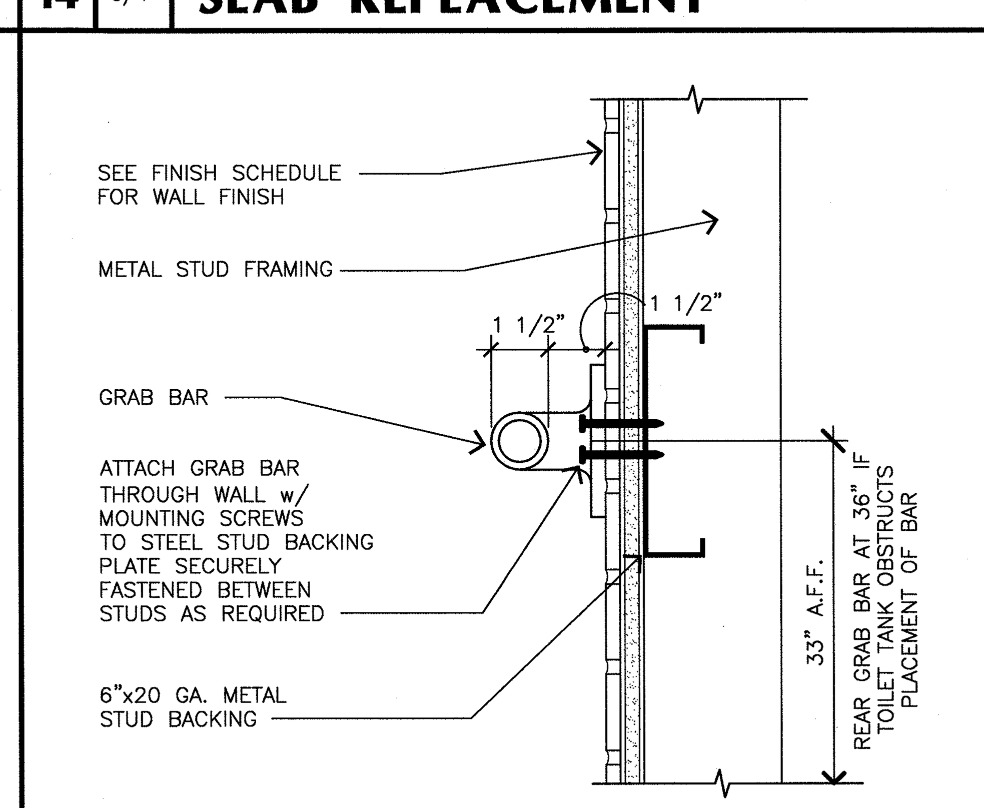

13 | 3" | **GRAB BAR**

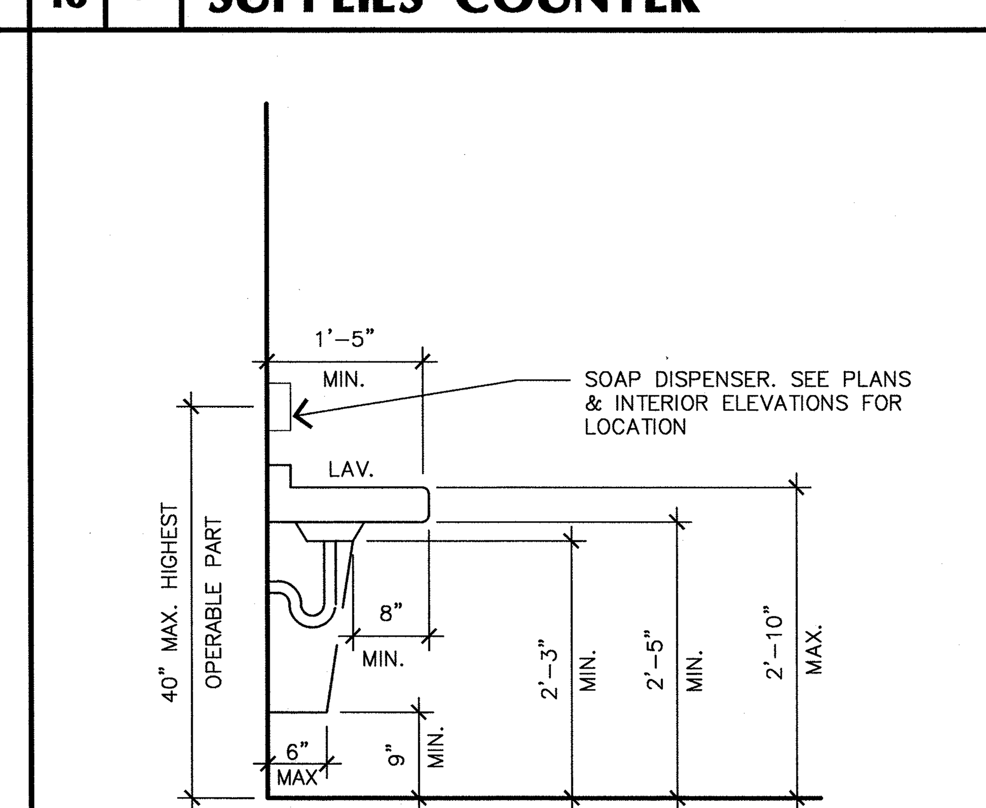

9 | 3/4" | **SINK DETAIL**

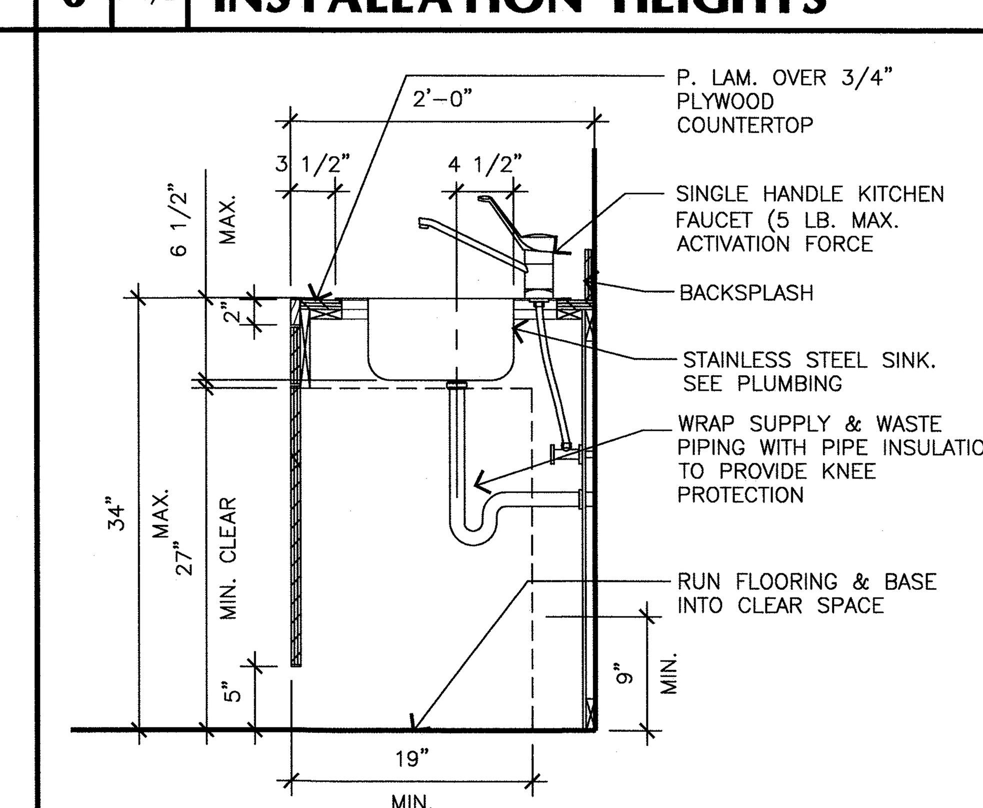

5 | 1" | **SINK CABINET**

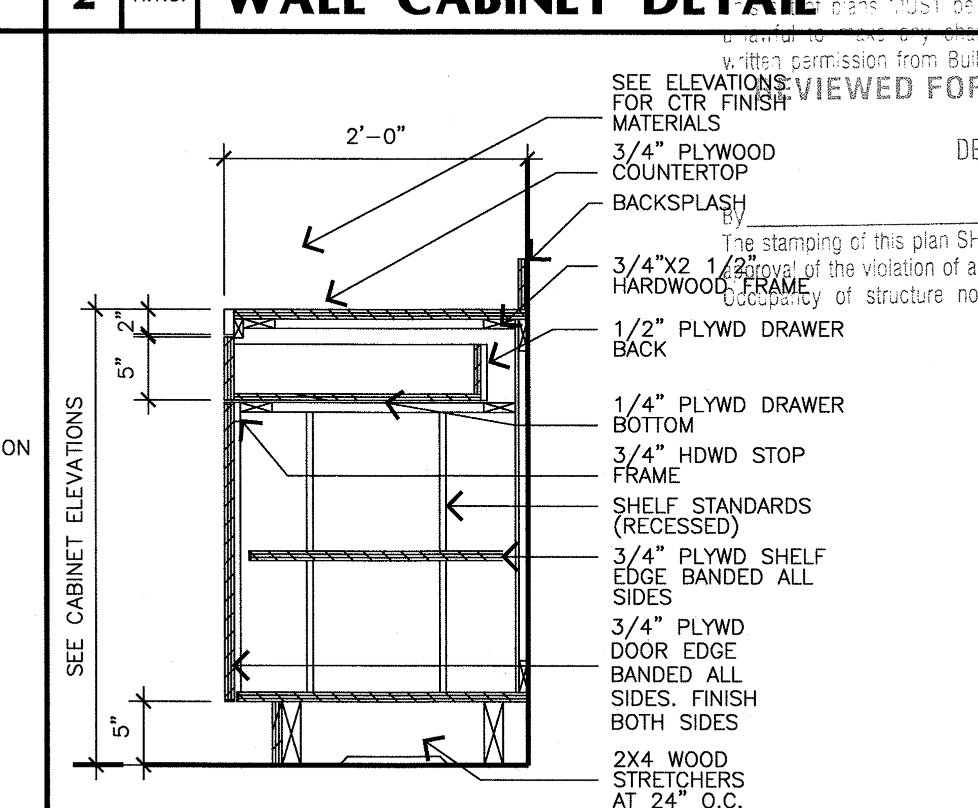

1 | N.T.S. | **BASE CABINET**

L Street Architects
L i m i t e d
1414 L Street
Modesto, California 95354
209-575-1415 209-575-4374 fax
www.lstreetarchitects.com

LICENSED ARCHITECT ROBERT T. DeGRASSE C-8827 RENEWAL 11/30/15 STATE OF CALIFORNIA

PROPOSED TENANT IMPROVEMENT FOR:

CENTER FOR HUMAN SERVICES

2000 W. BRIGGSMORE, SUITE I
MODESTO, CALIFORNIA 95350

This set of plans MUST be kept on the job at all times and it is unlawful to make any changes or alterations on same without written permission from Building Safety Division, City of Modesto.
REVIEWED FOR CODE COMPLIANCE
DEC 30 2014
By ______ Permit No. ______
The stamping of this plan SHALL NOT be held to permit or to be an approval of the violation of any provisions of any Ordinance or Law. Occupancy of structure not permitted until after final approval.

REVISIONS:	
DRAWN:	G. MEJIA
DATE:	11/06/2014
FILE:	216-A82
JOB:	61.216
PRINT DATE:	

DETAILS

A8.2

20

WATER FOUNTAINS (DRINKING)

1. WATER FOUNTAINS SHALL BE LOCATED COMPLETELY WITHIN ALCOVES OR OTHERWISE POSITIONED SO AS NOT TO ENCROACH INTO PEDESTRIAN WAYS. THE ALCOVE IN WHICH THE WATER FOUNTAIN IS LOCATED SHALL BE NOT LESS THAN 32 INCHES IN WIDTH AND 18 INCHES IN DEPTH. THE DRINKING FOUNTAIN SHALL BE A BETWEEN 18 INCHES & 19 INCHES IN DEPTH AND THERE SHALL BE A CLEAR AND UNOBSTRUCTED SPACE UNDER THE DRINKING FOUNTAIN NOT LESS THAN 27 INCHES IN HEIGHT 30 INCHES IN WIDTH AND 8 INCHES IN DEPTH, THE DEPTH MEASUREMENT BEING TAKEN FROM THE FRONT EDGE OF THE FOUNTAIN. ADDITIONALLY, THERE SHALL BE TOE CLEARANCE 9 INCHES IN HEIGHT ABOVE THE FLOOR AND 17" FROM THE FRONT EDGE OF THE DRINKING FOUNTAIN. A SIDE APPROACH DRINKING FOUNTAIN IS NOT ACCEPTABLE.

2. THE BUBBLER SHALL BE MANUALLY ACTIVATED BY A CONTROL WHICH IS EASILY OPERATED BY A PERSON WITH DISABILITIES SUCH AS A HAND–OPERATED LEVER TYPE CONTROL LOCATED WITHIN 6 INCHES OF THE FRONT OF THE FOUNTAIN, A PUSH BAR CONTROL ALONG THE FRONT OF THE DRINKING FOUNTAIN, ETC. THE BUBBLER OUTLET ORIFICE SHALL BE LOCATED WITHIN 6 INCHES OF THE FRONT OF THE DRINKING FOUNTAIN AND SHALL BE WITHIN 36 INCHES OF THE FLOOR.

3. THE SPOUT SHALL PROVIDE A FLOW OF WATER AT LEAST 4 INCHES HIGH SO AS TO ALLOW THE INSERTION OF A CUP OR GLASS UNDER THE FLOW OF WATER. WITH A ROUND OR OVAL BOWL, THE SPOUT MUST BE POSITIONED SO THE FLOW OF WATER IS WITHIN 3 INCHES OF THE FRONT EDGE OF THE FOUNTAIN.

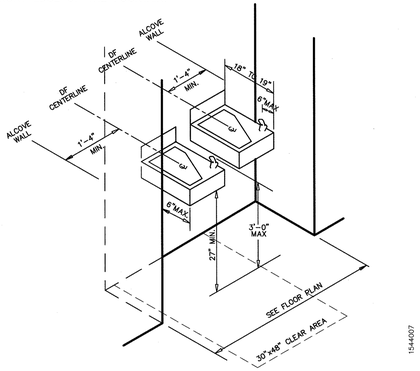

18 N.T.S. **DF CLEARANCES & NOTES**

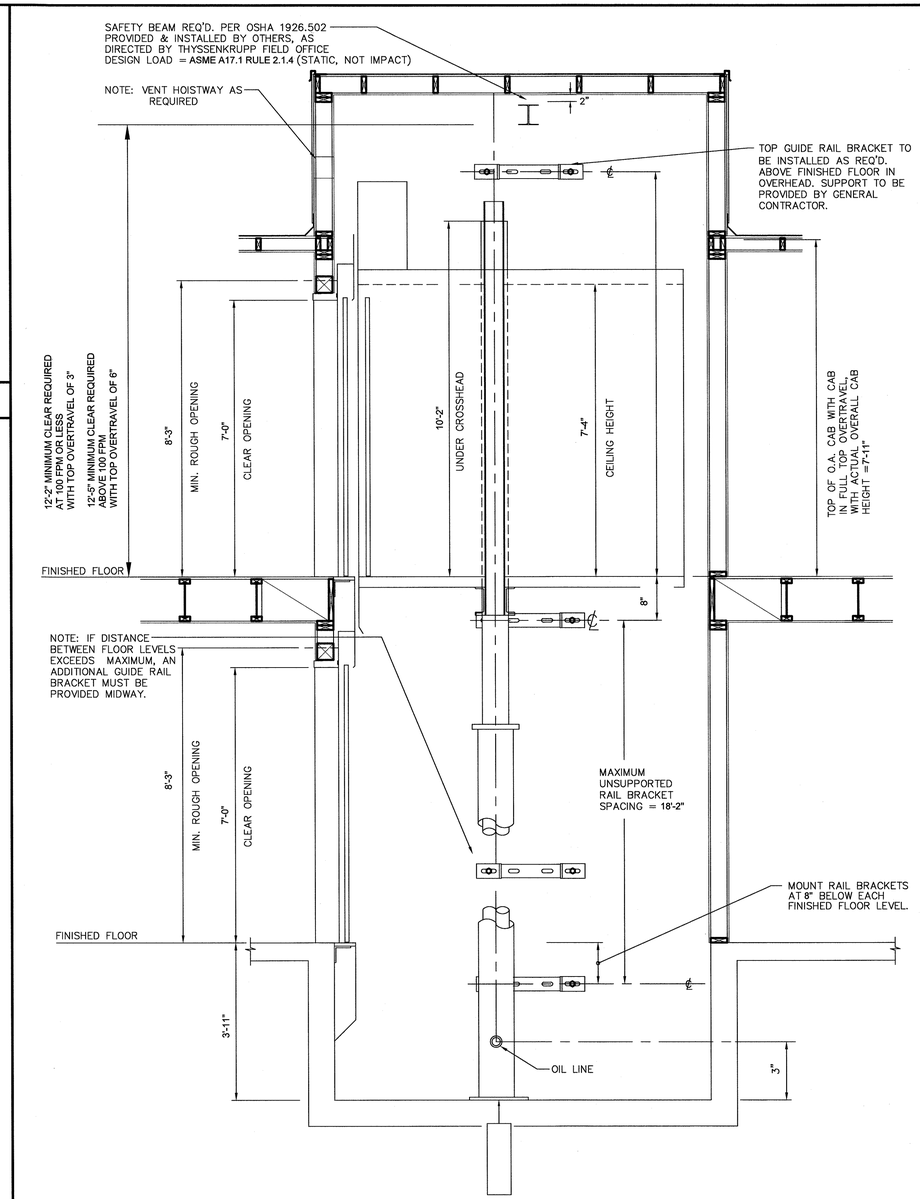

14 N.T.S. **TYPICAL ELEVATOR SECTION**

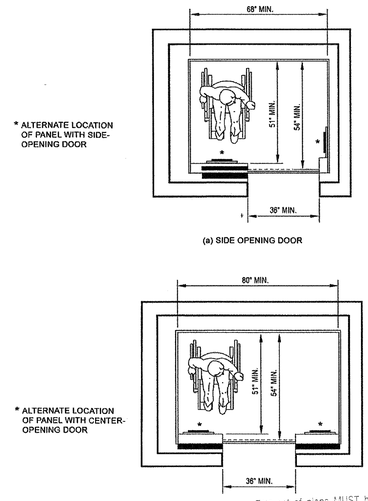

This set of plans MUST be kept on the job at all times and it is unlawful to make any changes or alterations on same without written permission from Building Safety Division, City of Modesto.
REVIEWED FOR CODE COMPLIANCE
DEC 30 2014
By_____ Permit No._____
The stamping of this plan SHALL NOT be held to permit or to be an approval of the violation of any provisions of any Ordinance or Law. Occupancy of structure not permitted until after final approval.

7 N.T.S. **ELEVATOR CAR DIMENSIONS**

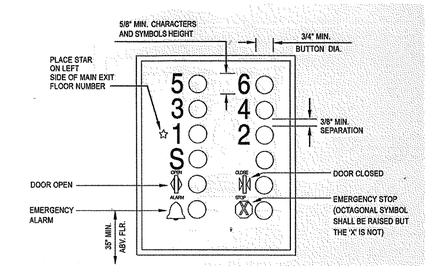

4 N.T.S. **CONTROL PANEL DETAIL**

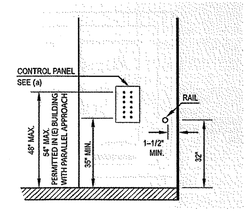

3 N.T.S. **ELEVATOR CONTROL PANEL**

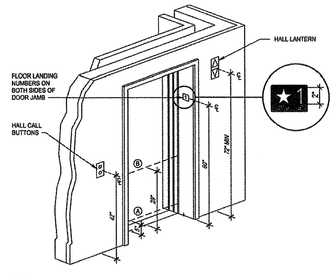

6 N.T.S. **ELEVATOR ENTRANCE**

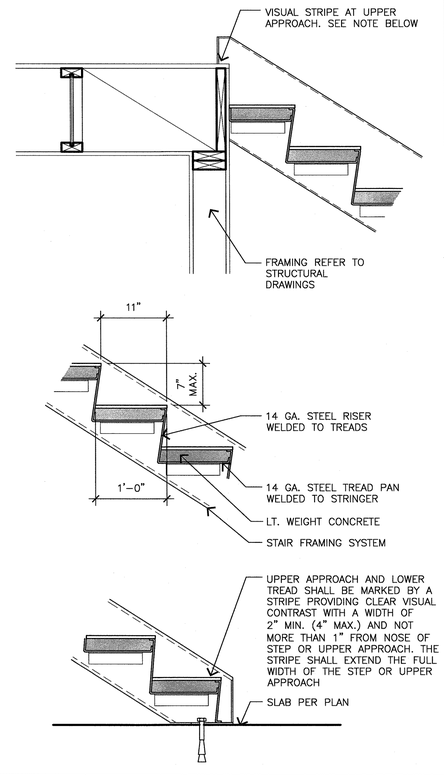

1 1" **STAIRWAY DETAILS**

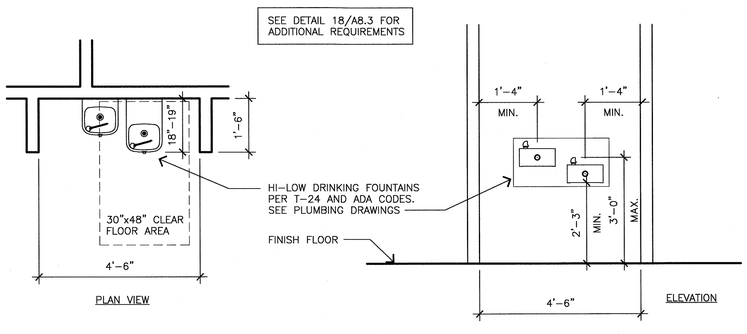

17 1/2" **HIGH-LOW ACCESSIBLE DRINKING FOUNTAINS**

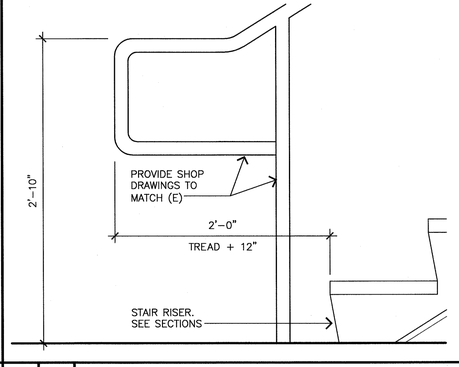

9 1 1/2" **HANDRAIL DETAIL**

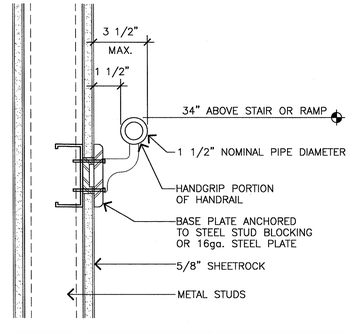

8 3" **HANDRAIL DETAIL**

L Street Architects
Limited
1414 L Street
Modesto, California 95354
209-575-1415 209-575-4374 fax
www.lstreetarchitect.com

LICENSED ARCHITECT
C-8827
RENEWAL 11/30/15
STATE OF CALIFORNIA

PROPOSED TENANT IMPROVEMENT FOR:

CENTER FOR HUMAN SERVICES

2000 W. BRIGGSMORE, SUITE I
MODESTO, CALIFORNIA 95350

REVISIONS:

DRAWN:	G. MEJIA
DATE:	11/06/2014
FILE:	216-A83
JOB:	61.216
PRINT DATE:	

DETAILS

A8.3

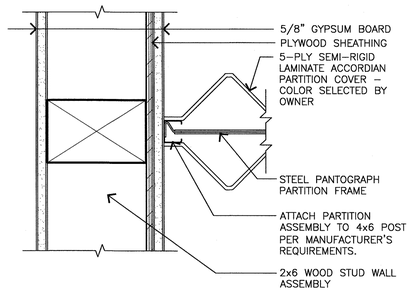

8 3" **PARTITION DETAIL**

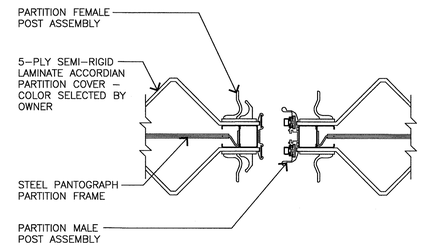

7 3" **PARTITION DETAIL**

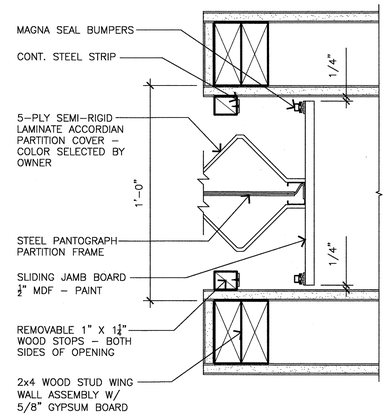

This set of plans MUST be kept on the job at all times and it is unlawful to make any changes or alterations on same without written permission from Building Safety Division, City of Modesto.

REVIEWED FOR CODE COMPLIANCE

DEC 30 2014

By _____ Permit No. _____

The stamping of this plan SHALL NOT be held to permit or to be an approval of the violation of any provisions of any Ordinance or Law. Occupancy of structure not permitted until after final approval.

3 3" **PARTITION DETAIL**

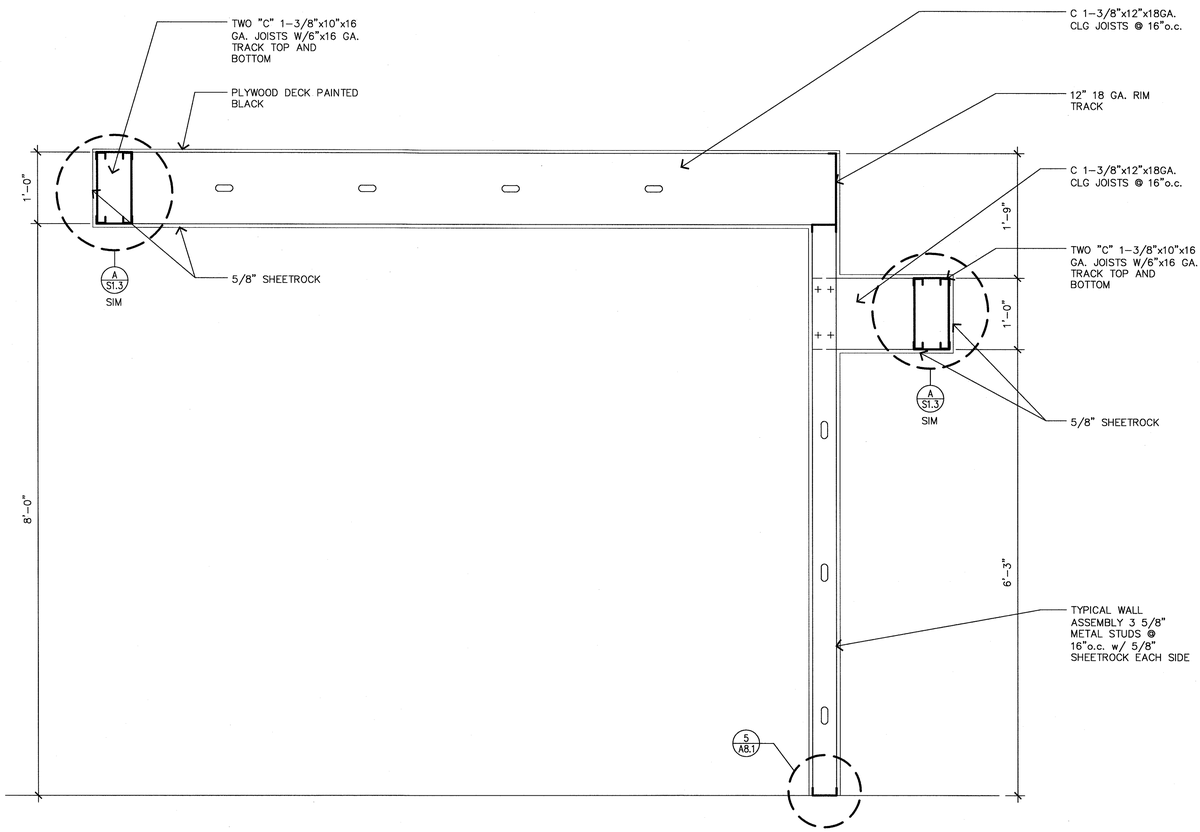

17 1" **SOFFIT DETAIL**

HUFCOR

4500 ACCORDION PARTITIONS

PRODUCT SPECIFICATIONS:

SERIES: 4500 STC: 45 WEIGHT: 5.1 LBS. / SQ. FT.

COVER CONST'N: SEMI-RIGID 5-PLY LAMINATED CONSTRUCTION WHICH PROVIDE WRINKLE-FREE IMPACT RESISTANT SURFACES. STEEL STRIPS AND FIBERGLASS ARE LAMINATED TO EACH FOLD FOR ACOUSTICAL PURPOSES. COVERS ARE REMOVABLE AND REPLACEABLE IN THE FIELD. COLOR MATCHED NYLON FASTENERS REQ'D.

INTERNAL FRAME: ELECTRO-GALVANIZED, HALF HARD STEEL RIVITED TO FORM 'X' CONSTRUCTION PANTOGRAPHS LOCATED AT TOP AND BOTTOM PLUS INTERMEDIATE PANTOGRAPHS AS REQ'D. STEEL STOPS PREVENT OVER EXTENDING.

POSTS: INTERNAL STEEL CHANNELS SUPPORT PANTOGRAPHS AT EACH END OF THE PARTITION.

SEALS: 5-PLY SWEEP STRIPS TOP AND BOTTOM BOTH SIDES OF PARTITION.

HANDLES: CLEAR ANODIZED EXTRUDED ALUMINUM.

SURFACE: HIGHLAND VINYL - COLOR SELECTED BY OWNER

CARRIERS: 1 3/8" DIA. NYLON WHEELS ON STEEL BALL BEARING AXLES.

TRACK: TYPE 15 CLEAR ANODIZED EXTRUDED ALUMINUM.

OPTIONS: (2) TYPE B INTERMEDIATE POSTS

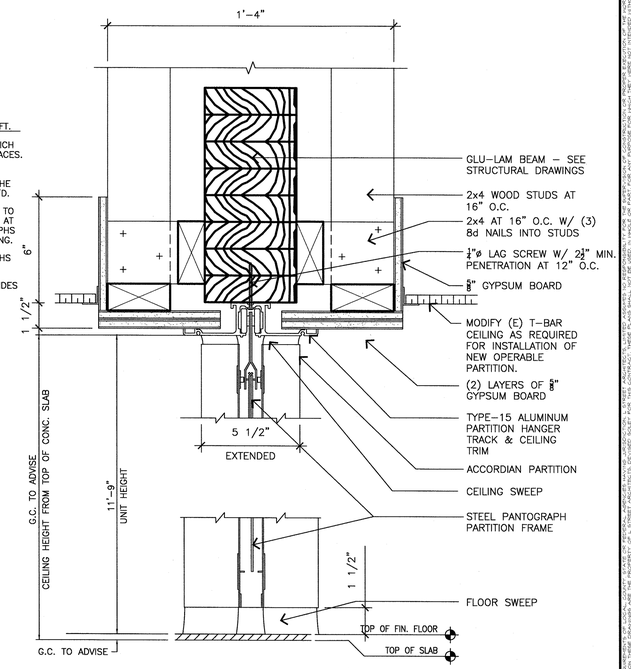

5 3" **ACCORDIAN PARTITION SECTION**

L Street Architects
Limited
1414 L Street
Modesto, California 95354
209-575-1415 209-575-4374 Fax
www.lstreetarchitects.com

LICENSED ARCHITECT ROBERT J. DORASE C-8827 RENEWAL 1/30/14 CALIFORNIA

PROPOSED TENANT IMPROVEMENT FOR:

CENTER FOR HUMAN SERVICES

2000 W. BRIGGSMORE, SUITE I
MODESTO, CALIFORNIA 95350

REVISIONS:

DRAWN:	G. MEJIA
DATE:	11/06/2014
FILE:	216-A84
JOB:	61.216
PRINT DATE:	

DETAILS

A8.4