SUPPLEMENTAL TECHNICAL SPECIFICATIONS

The following revisions and/or additions to the Technical Provisions of the NMDOT Standard Specifications for Highway and Bridge Construction are hereby made a part of the Contract Documents.

Spec Section	Title/Description	STS Page
107	NPDES Compliance	
461	Articulating Concrete Pavers	
462	Permeable Particle Binder	
611	Perforated Underdrain	
612	Trench Shoring	
665	Structural Soils	
681	Site Furnishings – Trapecio Bench	
717	Light Poles	
731	Crosswalk IRWL System	
732	Crosswalk Bollard Activator	

Modifying Section 107:
LEGAL RELATIONS, ENVIRONMENTAL REQUIREMENTS, AND RESPONSIBILITY TO THE PUBLIC

Add the following subsection:

107.32 NPDES COMPLIANCE

107.32.1 Scope of Work

The work under this section includes compliance with the U.S. Environmental Protection Agency (EPA), National Pollutant Discharge Elimination System (NPDES) Regulations for Storm Water Discharges from construction sites. This work consists of **developing** a site- specific Storm Water Pollution Prevention Plan (SWP3), if one has not been developed, and **implementing and maintaining** this plan to control erosion, pollution, sediment, and runoff during the construction of the project.

107.32.2 Measurement and Payment

NPDES compliance shall be paid for as follows:

1. Twenty-five (25) percent of the Lump Sum amount shall be paid after the **Contractor** has completed an EPA **Notice of Intent (NOI) for Storm Water Discharges Associated with Construction Activity Under a NPDES General Permit, Form 3510-9**. A copy of the NOI must be delivered to the **Owner** and the original filed with the EPA. All required erosion control measures sufficient to begin construction must also be in place. This will be defined in the plan specifications and/or the SWP3.

2. Payment for an additional fifty (50) percent of the Lump Sum shall be prorated based on the **Actual Percent Complete** on the *Application for Payment* as approved by the Architect, Engineer or Landscape Architect. For example, if the **Contractor** is 20% complete, the contractor can take the 20% (0.2) and multiply it by half of the Lump Sum amount, and receive that portion.

In order to receive payments, the field inspection forms must be sent in with the *Application for Payment* each month. If there are deficiencies maintaining or implementing the SWP3 and its Best Management Practices (BMPs), the payment will be withheld until the deficiencies are corrected.

3. The remaining twenty-five (25) percent of the Lump Sum will be based on the completion of an EPA **Notice of Termination (NOT) of Coverage Under a NPDES General Permit for Storm Water Discharges Associated with Construction Activity, Form 3510-13** and BMP removal. A copy of the NOT must be delivered to the **Owner** and the original filed with the EPA. BMPs must be removed as defined in the plan specifications or SWP3. This is done in case there are some BMPs that must remain until final stabilization is met, and that there are no more NPDES concerns for the **Contractor.**

END OF SECTION

Section 461

PERMEABLE, FLEXIBLE, ARTICULATING and MATTED CONCRETE PAVEMENT SYSTEM

PART 1: GENERAL

1.01 Description

A. Work shall consist of furnishing all material, labor, services and related items to complete the installation of a permeable pavement system using an articulating, matted concrete paver product in accordance with these specifications.

1.02 Related Sections

A Section 31 10 00 - Site Clearing
B Section 31 20 00 - Earth moving
C Section 32 14 00 - Unit Pavers
D Section 32 80 00 - Irrigation
E. Section 32 91 13 - Soil Preparation
F. Section 32 92 00 - Turf and Grass
G. Section 03 30 00 - Cast in place concrete

1.03 Reference Documents

A. ASTM D-422 - Particle Size Analysis
B. ASTM D-698 - Laboratory Compaction Characteristics of Soil - Standard Proctor
C. ASTM D-1557 - Laboratory Compaction Characteristics of Soil – Modified Proctor
D. ASTM C-39/39M – Std. Test Method for Compressive Strength of Cylindrical Concrete Specimens
E. ASTM C-33 Std. Spec. for Concrete Aggregates
F. ASTM C31/ C31 M Standard Practice for Making and Curing Concrete Test Specimens in the Field
G. ASTM C 150 Std. Spec for Portland Cement
H. ASTM C94 / C94M Std. Spec. for Ready – Mixed Concrete
I. ASTM C 1157 Std. Performance Specification for Hydraulic Cement
J. ASTM C595 Std. Spec. for Blended Hydraulic Cement
K. ASTM C61 8 Std. Spec. for Coal Fly Ash and Raw or Calcined Natural Pozzolan for use in Concrete
L. ASTM C161 1 / C161 1 M Std. Test Method for Slump Flow of Self-Consolidating Concrete
M. ASTM C989 Std. Spec. for Ground Granulated Blast-Furnace Slag for use in Concrete and Mortars
N. ASTM C979 Std. Spec. for Pigment for Integrally Colored Concrete
O. ACI 201 American Concrete Institute- Report on Durability
P. ACI 211 American Concrete Institute- Std. Practice for Selecting Proportions for Normal, Heavy Weight, and Mass Concrete
Q. Permeability Studies by the University of Central Florida
R. Coefficient of Friction and ADA Compliance report by Ardaman & Associates, Geotechnical, Environmental and Materials Consultants.

1.04 Submittals/Certification

A. Procedures: Comply with Section 01 33 00 – Submittal Procedures.
B. Product Data: Submit manufacturer's product data, including installation instructions.
C. Samples:
1) Submit 12" x 1 2" Articulating Concrete Mats Articulating Concrete Mats™ sample
2) Contractor to submit sieve analysis for grading of bedding sand and base material based on soil condition, proposed loadings and drainage criteria... permeable or non-permeable

1.05 Quality Assurance

A. Installer Qualifications: An experienced installer who has successfully completed installations of pavers or other pavement systems on projects of similar or larger scope and magnitude.

B. Prior to commencing the work of this section, verify the accuracy of layout and grading. Verify that all sub-grades and base course aggregate conditions are as specified. Notify the owner and / or engineer of any discrepancies and coordinate the correction of those discrepancies with other trades as necessary.

1.06 Delivery, Storage and Handling

A. Deliver materials to site in manufacturer's original palletized configuration with labels clearly identifying product style number, color, name and manufacturer.

B. Check all materials upon delivery to assure that the proper type, grade, color, and certification have been received.

C. Store materials in clean, dry area in accordance with manufacturer's instructions.

D. Protect all materials from damage due to jobsite conditions and in accordance with manufacturer's recommendations. Damaged materials shall not be incorporated into the work.

1.07 Project Conditions

A. Review installation procedures and coordinate Articulating Concrete Mats***TM*** installation with other work around installation area.

B. All adjacent hardscape, paving, and mow curbs/strips required by construction documents shall be completed prior to the installation of the Articulating Concrete Mats***TM*** paving mats.

C. Gradients for Articulating Concrete Mats***TM*** paving mats can vary from flat to 12% (7° above the horizontal). For steeper conditions, consult with manufacturer.

D. Cold weather applications:

i. Coordinate maintenance contracts.

ii. Snowplow equipment operators should be educated about the underlying surface prior to beginning snow removal. Snowplow equipment should be fitted with Teflon® runners, which will help keep the snowplow blade from damaging the product.

iii. For sites that will require the use of heavy-duty snowplowing machinery, install mow curb/strips prior to installation of Articulating Concrete Mats***TM*** paving mats. Articulating Concrete Mats***TM*** should be depressed 1/2" below the top of the mow curb/strip to protect the product from the snowplow blade.

iv. Do not use frozen materials or materials mixed or coated with ice or frost.

v. Do not build on frozen, wet, or muddy subgrade

E. Protect partially completed paving against damage from other construction traffic when work is in progress.

F. Projects using loose aggregate infill are drivable upon completing infill.

G. Projects using grout made with Permeable Particle Binder™ or polymeric sands as joint infill are drivable based on the manufacturer's information.

H. Projects using grass as the joint infill material shall allow the grass root system to mature, 3 mowing cycles (minimum), before being drivable.

I. Areas adjacent to Articulating Concrete Mats***TM*** installation should be protected during construction.

PART 2: PRODUCTS

2.01 Acceptable Manufacturer

A. Riccobene Masonry Company, Inc. Office: 6141 Edith, NE Albuquerque, NM 87107
Phone: 505-345-2601 and 800-274-3477, fax: 505-345-2603, website: www.riccobene.com, e-mail: info@riccobene.com.

B. No substitutions shall be approved unless equal field test data is submitted.

2.02 Permeable, Flexible, Matted Pavement System

A. Permeable, Flexible, Matted Pavement System: Articulating Concrete Mats***TM***

1)	Nominal Dimensions in inches (l x w x h)	48 x 16 x 1 5/8
2)	Gross Area of each Straight or Fan Mat in square ft	5.33
3)	Gross Area of each Circle Centre 2-part unit	16.00
4)	Weight of Each Mat in pounds	60
5)	Plantable Area in percent	60
6)	Mats per pallet (each)	30
7)	Area Covered per Pallet in square feet	160

B. Color: Charcoal Grey (monochromatic)... Sandy Creek, Sedona, Ashlar Grey and Desert Blend (3 color blends)

1)	Concrete Compressive Strength @ 28 days in psi	5000 (ASTM C31)
2)	Propriety Grid Reinforcement	Engineered Plastic

C. Filter Fabric –if required and as specified by the civil engineer.

D. Base Aggregate – Crushed permeable base, crushed miscellaneous base (CMB), crushed aggregate base (CAB), crushed rock or similar structural material normally used as a base course for pavement systems and meeting the gradation and / or permeability requirements shown on the drawings.

E. Bedding Course – Defined as the initial material directly beneath the Articulating Concrete Mats***TM*** . A thickness of 1" of coarse, washed sand or #89 stone.

1) Sand shall be clean, non-plastic, and free from deleterious or foreign matter. The sand shall be sharp and manufactured from crushed rock or natural sand. Do not use masonry sand. The particles shall conform to the grading requirements shown below:
2) Stone dust or waste screenings shall not be used for permeable installations. They can have an excessive amount of material passing the No. 200 (0.075 mm) sieve, which will clog the permeable system.

ASTM C33 CSA A23.1-M94

Sieve Size	Percent Passing
3/8 in. (9.5 mm)	100
No. 4 (4.75 mm)	95 to 100
No. 8 (2.36 mm)	85 to 100
No. 16 (1.18 mm)	50 to 85
No. 30 (0.600 mm)	25 to 60
No. 50 (0.300mm)	0 to 30
No. 100 (0.15mm)	2 to 10

3) A minimum thickness of 2 inches of an approved engineered soil design.
4) Compost material is defined as finely ground, well screened composted products such as composted manures, mushroom compost or green-waste compost. Material should be able to mix well with sand, able to hold moisture, and provide nutrient.

F. For non-cohesive infills staking is recommended – consult manufacturer and see specific alternative infill details and instructions.

G. Grass - Use approved seed, hydro-seed mix or sod as specified for site specific application.

H. Seed Cover - (Needed only for seed, stolon or plug applications) shall be of wood or paper cellulose types. Mulches of straw, pine needles, etc. will not be acceptable because of their low moisture holding capacity.

I. Fertilizer - A commercial "starter" fertilizer shall be used. Check with local grass suppliers for recommendations.

PART 3: EXECUTION

3.01 Subgrade Preparation

A. Vertical depth to accommodate structural section (if applicable) of base aggregate, bedding sand layer and Articulating Concrete Mats*TM* mat thickness of 1 5/8". Note: set the top surface of the matted pavers 1/4" to 3/8" high in reference to adjacent paved surfaces to allow for the compaction in 3.03 D below.

B. Excavate to the lines and grades shown on the construction drawings.

C. Install any mow strips or curbs as specified.

D. Proof roll foundation area as directed to determine if remedial work is required.

E. Owner's representative shall inspect the excavation and approve prior to placement of base material or fill soils.

F. Over-excavation and replacement of unsuitable subgrade soils with approved compacted fill shall be compensated as agreed upon with the Owner.

3.02 Installation of Aggregate Base and Sand Setting Bed

A. Install and compact aggregate base as required by the contract drawings.

B. Install irrigation system to the specified depth and location as required by the contract drawings.

C. Install direct burial electrical, conduits and other utility infrastructure in the aggregate base.

D. Place and level the bedding course upon which permeable, flexible and matted pavement system will be placed.

3.03 Install Articulating Concrete Mats™ Pavement System

A. Install the permeable, flexible, and matted pavement system in accordance with the manufacturer's guidelines. Note: removal of the 2 half stones on each end of each mat allows the mats to interlock and create a continuous running bond. Use the half stones in lieu of cutting full stones to fill around fixed objects such as columns.

B. Install system to the line, grades and locations required by the contract documents.

C. Install mats in one axial direction. Butt mats against each other leaving no significant gaps. Adjust mats as required to maintain good grid pattern alignment.

D. Using a flat-plate compactor, set the Articulating Concrete Mats into bedding sand.

E. Placing a sheet of plywood between the matted pavers and the steel plate of the compactor will spread out the applied loading and prevent surface scaring of the pavers. Do not allow the flat-plate compactor to stay in one location, keep it moving or turn it off. This operation will bring the pavers flush with adjacent paved surfaces. See item 3.01 A.

3.04 Joint Infill Materials

A. Permeable grout, polymeric sand, 3/8" minus stone, decomposed granite, stone dust, etc., depending on application and aesthetic requirements.

B. Infill not intended to support vegetation shall be permeable grout made with Permeable Particle Binder™ by Riccobene Masonry Co. or approved polymeric sand.

C. The sand component for mixing with the Permeable Particle Binder™ may be of a range of graded, dry aggregates and colors to provide the desired permeability and aesthetic for the project.

D. Infill for planting to be comprised of the same material as the bedding course.

E. Spread infill uniformly across the mats with a push broom. To avoid scouring by use, leave loose infills and polymeric sands about 1/4" below the concrete pad surface.

3.05 Edge Restraints

A. Depending on the design and use, non-vehicular traffic areas may not require edge restraints due to the cohesiveness of the Permeable Particle Binder™.

B. Concrete restraints are recommended for installations subject to vehicular traffic such as cross walks, driveways, parking lots and streets.

3.06 Field Quality Control

A. The Owner shall engage inspection and testing services, including independent laboratories, to provide quality assurance and testing services during construction. This does not relieve the Contractor from securing the necessary construction control testing during construction when required by the contract documents.

B. Qualified and experienced technicians and engineers shall perform testing and inspections services.

C. As a minimum, quality assurance testing should include subgrade soil inspection, aggregate base and bedding type, quality, thickness, and compaction, and observation of construction for general compliance with design drawings and specifications.

Section 462

ADVANCED, PROFESSIONAL GRADE AND PERMEABLE PARTICLE BINDER for PAVER and NATURAL STONE JOINT INFILL

PART 1: GENERAL

1.01 Description

A. Work shall consist of furnishing all material, labor, services and related items to complete the installation of permeable joint infill grout using a particle binder material to create a permeable, structural, flexible and open matrix grout for pavers and natural stone in accordance with these specifications.

1.02 Related Sections

A Section 31 10 00 - Site Clearing
B Section 31 20 00 - Earth moving
C Section 32 14 00 - Unit Pavers
D Section 32 80 00 - Irrigation
E. Section 32 91 13 - Soil Preparation
F. Section 32 92 00 - Turf and Grass
G. Section 03 30 00 - Cast in place concrete

1.03 Reference Documents

A. ASTM D-422 - Particle Size Analysis
B. ASTM D-698 - Laboratory Compaction Characteristics of Soil - Standard Proctor
C. ASTM D-1557 - Laboratory Compaction Characteristics of Soil – Modified Proctor
D. ASTM C-39/39M – Std. Test Method for Compressive Strength of Cylindrical Concrete Specimens
E. ASTM C-33 Std. Spec. for Concrete Aggregates
F. ASTM C31/ C31 M Standard Practice for Making and Curing Concrete Test Specimens in the Field
G. ASTM C 150 Std. Spec for Portland Cement
H. ASTM C94 / C94M Std. Spec. for Ready – Mixed Concrete
I. ASTM C 1157 Std. Performance Specification for Hydraulic Cement
J. ASTM C595 Std. Spec. for Blended Hydraulic Cement
K. ASTM C61 8 Std. Spec. for Coal Fly Ash and Raw or Calcined Natural Pozzolan for use in Concrete
L. ASTM C161 1 / C161 1 M Std. Test Method for Slump Flow of Self-Consolidating Concrete
M. ASTM C989 Std. Spec. for Ground Granulated Blast-Furnace Slag for use in Concrete and Mortars
N. ASTM C979 Std. Spec. for Pigment for Integrally Colored Concrete
O. ACI 201 American Concrete Institute- Report on Durability
P. ACI 211 American Concrete Institute- Std. Practice for Selecting Proportions for Normal, Heavy Weight, and Mass Concrete
Q. Permeability Studies by the University of Central Florida
R. Coefficient of Friction and ADA Compliance report by Ardaman & Associates, Geotechnical, Environmental and Materials Consultants.
S. MSDS Documents for Permeable Particle Binder™ Part A and Part B
T. Instructions for Preparing Permeable Grout using for Permeable Particle Binder™

1.04 Submittals/Certification

A. Procedures: Comply with Section 01 33 00 – Submittal Procedures.
B. Product Data: Submit manufacturer's product data, including installation instructions.
C. Samples:
1) Submit 6" x 6" x 1" grout sample that has used Permeable Particle Binder™ and dry, graded sand to verify color, texture and permeability rate.

2) Submit sieve analysis for sand component as required.

1.05 Quality Assurance

A. Installer Qualifications: An experienced installer who has successfully completed installations of pavers or other pavement systems on projects of similar or larger scope and magnitude.

B. Prior to commencing the work of this section, verify the accuracy of layout and grading. Verify that all sub-grades and base course aggregate conditions are as specified. Notify the owner and / or engineer of any discrepancies and coordinate the correction of those discrepancies with other trades as necessary.

1.06 Delivery, Storage and Handling

A. Deliver materials to site in manufacturer's original palletized configuration with labels clearly identifying product style number, color, name and manufacturer.

B. Check all materials upon delivery to assure that the proper type, grade, color, and certification have been received.

C. Store materials in clean, dry area in accordance with manufacturer's instructions.

D. Store materials in an area to prevent freezing or temperatures above 95° for a prolonged amount of time.

E. Protect all materials from damage due to jobsite conditions and in accordance with manufacturer's recommendations. Damaged materials shall not be incorporated into the work.

1.07 Project Conditions

A. Review installation procedures and coordinate Permeable Particle Binder***TM*** installation with other work around installation area.

B. All adjacent hardscape, paving, and mow curbs/strips required by construction documents shall be completed prior to the installation of the Permeable Particle Binder***TM*** paving mats.

C. Gradients for Permeable Particle Binder***TM*** grout can vary from flat to 12% (7° above the horizontal). Grout placed on a sloped gradient may have a tendency to flow to a low point, particularly during episodes of hot weather. Temporary damming may be necessary. For steeper conditions, consult with manufacturer.

D. Cold weather applications:

i. Do not use frozen materials or materials mixed or coated with ice or frost.

ii. Do not build on frozen, wet, or muddy subgrade

iii. Protect Permeable Particle Binder***TM*** kits from freezing

iv. Protect grout from freezing

E. Hot weather conditions:

i. Protect Permeable Particle Binder kits from exposure to direct sunlight while in storage.

ii. The workability time, pot-life, is shorter when exposed to temperatures over 80° F

F. Protect partially completed paving against damage from other construction traffic when work is in progress. Projects using aggregate loose infill are drivable upon completing infill. Projects using polymeric sands or Permeable Particle Binder are drivable based on the manufacturer's information.

G. Areas adjacent to Permeable Particle Binder installation should be protected during construction.

PART 2: PRODUCTS

2.01 Acceptable Manufacturer

A. Riccobene Masonry Company, Inc. Office: 6141 Edith, NE Albuquerque, NM 87107

Phone: 505-345-2601 and 800-274-3477, fax: 505-345-2603, website: www.riccobene.com, e-mail: info@riccobene.com.

B. No substitutions shall be approved unless equal field test data is submitted.

2.02 Permeable, Flexible, Structural Joint Infill Material:

A. Permeable, Flexible, Structural Joint Infill Material: Permeable Particle Binder***TM***

1) Joint width	3/16" minimum, 12" maximum
2) Joint depth	based on paver/stone thickness
3) Kits per case (each)	9
4) Coverage per kit	varies per paver product

B. Color: clear (Part B has a slight amber tint)

1) Concrete Compressive Strength @ 28 days in psi	3500
2) Pot Life in minutes after mixing Parts A & B	45 (temperature dependent)

C. Grout Aggregate:

1) Baseline material is a 50# bag of dry, 20-40 grit pool filter sand.
2) Larger and smaller aggregates will modify the permeability of the installation and the coverage per kit. Contact Riccobene Masonry Company for additional information on various aggregate components.
3) The size of the aggregate will determine the amount of water that may be added per kit. Contact Riccobene Masonry Company for the water volume chart.
4) Permeable Particle Binder***TM*** kits are available in volumes for sand or coarse aggregate.

PART 3: EXECUTION

3.01 Installation Preparation

A. Read and follow the manufacturer's instructions.
B. If there are questions contact Riccobene Masonry Company, Inc. before proceeding.
C. Not following the manufacturer's instructions will void all warranties and claims.
D. Have necessary tools and safety equipment on hand and ready for use.
E. Mix one kit of grout at a time and sequence additional kits so not to extend beyond the pot life per kit for installation into the joints with the squeegee.

3.02 Protection

A. Avoid significant run on of stormwater during curing phase.
B. Avoid extremely hot weather installations.

3.03 Field Quality Control

A. Permeable Particle Binder***TM*** is a professional grade product and should be installed by qualified and experienced technicians who have been trained and acknowledge an understanding of the materials and installation instructions.
B. Any additional testing of the grout made with the Permeable Particle Binder***TM*** is at the buyer's expense.

SECTION 611 - UNDERDRAIN

PART 1- GENERAL

1.1 DESCRIPTION

A. The WORK under this Section includes providing all labor, materials, tools and equipment necessary for furnishing and installing underdrain as shown on the Drawings and the Standard Details.

PART 2 - PRODUCTS

2.1 MATERIAL

A. The type and size of underdrain pipe to furnished shall be as specified on the Drawings.

B. Slotted or perforated and non-perforated corrugated steel pipe shall conform to the requirements of AASHTO M 36.

C. Slotted or perforated and non-perforated corrugated aluminum alloy pipe shall conform to the requirements of AASHTO M 196.

D. Slotted or perforated and non-perforated corrugated polyethylene (CPP) plastic pipe shall conform to the requirements of AASHTO M 252.

E. Slotted or perforated and non-perforated polyvinyl chloride (PVC) plastic pipe shall conform to the requirements of ASTM D 3034.

F. Slotted pipe shall have at least two rows of slots cut perpendicular to the axis of the pipe or at right angles to the pitch of corrugations and with the centerlines of the rows separated by one-third the circumference of the pipe. Slots shall have a width between one-sixteen inch and one-tenth inch and shall have a length, as measured along the inside circumference, of one inch to one and one-fourth- inch. Spacing of the slots shall be between three-fourth-inch and one and one-half-inch along the axis of the pipe. Slots shall be formed in such a way that inflow of water through the slots will not be impeded by excessive residual material from the slotting procedure.

G. Granular backfill material shall be placed to the dimensions as shown on the Drawings or the Standard Details, and shall meet the following gradation:

Sieve Designation	Percent Passing
2-inch	100
No. 4	0-10
No. 100	0-3

H. Filter cloth for underdrain trenches shall be Type A, as specified under Section 02714 - Filter Cloth.

PART 3 - EXECUTION

3.1 CONSTRUCTION

A. Trenches shall be excavated to the dimensions and grade shown on the Drawings or as directed by the ENGINEER. A nominal two inch layer of granular backfill material shall be placed and compacted in the bottom of the trench for its full width and length.

B. Filter cloth, if called for on the Drawings, shall be placed as shown on the Drawings and the Standard Details.

C. Perforated pipe shall be placed with the perforations down. The pipe sections shall be joined securely with the appropriate coupling bands or fittings.

D. After the pipe installation has been inspected and approved, granular backfill material shall be placed and compacted to a height of 12 inches above the top of pipe. The remainder of the granular backfill material shall then be placed and compacted in six inch maximum layers to the required height.

E. Any remaining portion of trench above the granular backfill shall be filled with either granular or impervious material, as may be specified, and thoroughly compacted. Compaction shall be a specified in Section 02203 - Trenching.

END OF SECTION

SECTION 612

SHORING AND UNDERPINNING

PART 1 GENERAL

1.01 SECTION INCLUDES

A. Shoring for open excavations requiring a protective system.

1.02 REFERENCES

A. OSHA Construction Standards Chapter P: Excavations, Trenching, and Shoring.

1.03 RESPONSIBILITY

A. Contractor/Developer is solely responsible for safety. It is the Contractor/Developer's responsibility to adhere to all of OSHA's current regulations.

1.04 DEFINITIONS

A. Accepted Engineering Practices: Those requirements or practices which are compatible with standards required by a duly licensed or recognized authority.

B. Benching: A method of protecting persons and property against cave-ins by excavation the sides of an excavation to form one or a series of horizontal levels or steps, usually with vertical or near-vertical surfaces between levels.

C. Excavation: Any man-made cut, cavity, or depression in an earth surface, including trenches, formed by earth removal and producing unsupported earth conditions (sides). If installed forms or similar structures reduce the depth-to-width relationship, and excavation may become a trench.

D. Failure: The permanent deformation or breakage of a structural member or connection; or the collapse of all or part of an excavation.

E. Protective System: Any recognized method of protecting persons and property against cave-ins, the collapse of adjacent structures, or material that may fall or roll from an excavation side or into and excavation. Protective systems include support systems, sloping and benching systems and shield systems.

F. Shield/Trenchbox : A structure that is able to withstand the forces imposed on it by a cave-in and thereby protect persons and property within the structure without preventing a cave-in. Shields may be permanent structures or may be designed to be portable and moved along as work progresses. Portable shields used in trenches are usually referred to as "trench boxes" or "trench shields".

G. Shoring: A structure that supports the sides of an excavation and thereby protects persons and property by preventing cave-ins.

H. Sides: A vertical or inclined earth surfaces formed at the outer edges of an excavation.

I. Sloping: A method of protecting persons and property against cave-ins by excavation to form sides that are inclined away from the excavation, the angle on incline being of such a degree for the conditions of exposure that a cave-in will not occur.

J. Support System: A structure which protects persons and property by providing support to an adjacent structure, underground installation, or the sides of an excavation.

K. Trench: A narrow excavation made below the surface of the ground. In general, the depth is greater than the width, but the width of a trench is not greater than 15 feet.

1.05 DESIGN OF PROTECTIVE SYSTEMS

A. Use professional engineer to design support systems, shield systems, and the structural components of these systems, and sloping and benching systems to resist without failure all loads that are intended to be imposed or transmitted to them.

B. Fully compensate in design procedures for hydrostatic pressure in the excavation sides.

PART 2 PRODUCTS

2.01 MATERIALS

A. Materials shall be as per 1.05 of this section.

PART 3 EXECUTION

3.01 STABILITY OF ADJACENT STRUCTURES

A. Use support systems such as shoring, bracing, or underpinning where stability of adjoining buildings, walls, sidewalks, pavements, or other structures is endangered by excavation operations.

3.02 INSPECTIONS

A. Contractor/Developer shall employ and have on site at all times a competent person, as defined be OSHA, who is responsible for excavation inspection.

B. Inspect excavations daily for evidence of possible cave-ins, indications of failure of protective systems, or other hazardous conditions.

C. Upon discovery of hazardous conditions, cease all work in the excavations until additional precautions have been taken to ensure persons and property safety.

3.03 ADDITIONAL REQUIREMENT FOR TRENCH EXCAVATION

A. Do not excavate material to a level greater than 2 feet below the bottom of the members of a support system if the system is designed to resist the forces calculated for the full depth of the trench, and indications of a possible cave-in below the bottom of the support system are not evident while the trench is open.

END OF SECTION

SECTION 1006

STRUCTURAL PLANTING SOIL FOR PAVING SUPPORT

1.01 GENERAL

The work of this Section consists of all Structural Soil work and related items as indicated on the Drawings or as specified herein and includes, but is not limited to, the following:

1.02 REFERENCES AND STANDARDS

A. The following references are used herein and shall mean:
1. AASHTO: American Association of State Highway and Transportation Officials.
2. AOAC: Association of Official Agricultural Chemists
3. ASTM: American Society of Testing Materials.
4. CBR: California Bearing Ratio test
5. USDA: United States Department of Agriculture.
6. Standard Specifications: City of Albuquerque Standard Specifications for Public Works Construction.

1.03 SAMPLES AND SUBMITTALS

A. At least 30 days prior to ordering materials, the Contractor shall submit to the Project Representative samples, certificates, manufacturers literature for materials specified below. No materials shall be ordered until the required samples, certificates, and manufacturer's literature have been reviewed and approved by the Architect/Engineer. Delivered materials shall closely match the approved samples. Approval of submittals shall not constitute final acceptance of delivered materials. The Architect/Engineer reserves the right to reject, on or after delivery, any material that does not meet these specifications.

B. Submit one two-cubic-foot representative sample per each 500 cu. ft. of Structural Soil mix prepared as specified herein for testing, analysis, and approval. Samples shall be labeled to include the location of the source of the material, the date of the sample and the Contractor's name.

C. Submit soil test analysis reports for each sample of Clay Loam from an approved soil-testing laboratory. The soil testing laboratory shall be approved by the Owner's Representative. The testing laboratory for particle size and chemical analysis may be a public agricultural extension service agency or agricultural experiment station. The test results shall report the following:

1. Submit a bulk density of the sample and particle size analysis. Sieve analysis shall be performed and compared to USDA Soil Classification System. Sieve analysis shall be done by a combined hydrometer and wet sieving using sodium hexametaphosphate as a dispersant in compliance with ASTM D422 after destruction of organic matter by hydrogen peroxide.

2. Submit a chemical analysis, performed in accordance with current AOAC Standards, including the following:

a. pH and Buffer pH.
b. Percent organic matter as determined by the loss of ignition of oven dried samples. Test samples shall be oven dried to a constant weight at a temperature of 230 degrees F, plus or minus 9 degrees.
c. Analysis for nutrient levels by parts per million including nitrate nitrogen, ammonium nitrogen, phosphorus, potassium, magnesium, manganese, iron, zinc, calcium and extractable aluminum. Nutrient test shall include the

testing laboratory recommendations for supplemental additions to the soil as calculated by the amount of material to be added per volume of soil for the type of plants to be grown in the soil.

d. Analysis for levels of toxic elements and compounds including arsenic, boron, cadmium, chromium, copper, lead mercury, molybdenum, nickel, zinc and PCB. Test results shall be cited in milligrams per kilogram.

e. Soluble salt by electrical conductivity of a 1 :2 soil/water sample measured in Milliohm per cm.

f. Cation Exchange Capacity (CEC).

g. Carbon/Nitrogen Ratio.

D. Submit soil test analysis reports for each sample of Structural Soil mix from an approved soil-testing laboratory. The soil testing laboratory shall be approved by the Owner's Representative.

1. Submit 5-point minimum moisture density curve AASHTO T 99 test results for each Structural Soil sample without removing oversized aggregate.

2. Submit California Bearing Ratio test results for each Structural Soil sample compacted to peak standard density. The soaked CBR shall equal or exceed a value of 50.

3. Submit measured dry-weight percentage of stone in the mixture.

E. The approved Structural Soil samples shall be the standard for each lot of 500 cubic yards of material. Costs for all analyses shall be borne by the Contractor.

1.04 DELIVERY, STORAGE, AND HANDLING

A. Do not deliver or place soils in frozen, wet, or muddy conditions. Material shall be delivered at or near optimum compaction moisture content as determined by AASHTO T 99 (ASTM D 698). Do not deliver or place materials in an excessively moist condition (beyond 2 percent above optimum compaction moisture content).

B. Protect soils and mixes from absorbing excess water and from erosion at all times. Stored or stockpiled materials shall be protected from rainfall events. Do not allow excess water to enter site prior to compaction. Additional water should not be introduced into the material after placement and final grading, unless necessary to return material to optimal moisture level for compaction.

1.05 EXAMINATION OF CONDITIONS

A. All areas to receive Structural Soil shall be inspected by the Contractor before starting work and all defects such as incorrect grading, compaction and inadequate drainage etc. shall be reported to the Engineer prior to beginning this work.

B. The Contractor shall be responsible for judging the full extent of work requirements involved, including but not limited to the potential need for temporary storage and staging of soils, including moving soil stock piles at the site to accommodate scheduling of other work and the need to protect installed soils from compaction, erosion, and contamination.

1.06 QUALITY ASSURANCE

A. Qualifications of Landscape or Pavement Material Contractor: The work of this section shall be performed by a Landscape Contracting firm which has a minimum of 5 years experience successfully installing planting mix of a similar quality, schedule requirement, and construction detailing to this project. Proof of this experience shall be submitted as per paragraph 1.03, SAMPLES AND SUBMITTALS, of this Section.

2.0 MATERIALS

2.01 CLAY LOAM

A. Clay Loam shall be a "loam" based on the "USDA classification system" as determined by mechanical analysis (ASTM D-422) and it shall be of uniform composition, without admixture of subsoil. Clay Loam shall be the product of a commercial processing facility specializing in production of stripped natural topsoil. No topsoil shall come from USDA -classified prime farmland. It shall be free of stones greater than one-half inch, lumps, plants and their roots, debris and other extraneous matter over one inch in diameter or excess of smaller pieces of the same materials as determined by the Engineer. It shall not contain toxic substances harmful to plant growth. It shall be obtained from naturally well-drained areas, which have never been stripped of top soil before and have a history of satisfactory vegetative growth. Clay Loam shall contain not less than 2% nor more than 5% organic matter as determined by the loss on ignition of oven-dried samples.

B. Mechanical analysis for a Loam / Clay Loam shall be as follows:

Textural Class	Size in mm.	% of total weight
Gravel	> 2mm	less than 5%
Sand	0.05 - 2 mm	20 -45%
Silt	0.002 - 0.05 mm	20- 50%
Clay	< 0.002 mm	20- 40%

C. Chemical analysis: Meet or be amended to meet the following criteria.

1. Percent organic matter 2 -5% by dry weight.
2. Nutrient levels as required by the testing laboratory recommendations for the type of plants to be grown in the soil.
3. Toxic elements and compounds below the United States Environmental Protection Agency Standards for Exceptional Quality sludge or local standard; whichever is more stringent.
4. Soluble salt less than 1.0 Milliohm per cm.
5. Cation Exchange Capacity (CEC) greater than 10
6. Carbon/Nitrogen Ratio less than 33: 1.

2.02 FERTILIZER

A. Commercial fertilizer complying with State and United States fertilizer laws. Deliver fertilizer in original unopened containers, which shall bear the manufacturer's certificate of compliance covering analysis, which shall be furnished to the Engineer. Fertilizer shall be formulated for mixing into the soil and be certified by the manufacturer to provide controlled release of nitrogen continuously for a period of no less than 9 months and no more than 12 months.

B. Fertilizer percentages of weight of ingredients and application rates shall be as recommended by the testing laboratory based on soil testing results.

2.04 CRUSHED STONE

A. Crushed Stone shall be a DOT certified granite crushed stone. Ninety-100 percent of the stone should pass the 1.5 inch sieve, 20-55 percent should pass the 1.0 inch sieve and 10 percent should pass the 0.75 inch sieve. A ratio of nominal maximum to nominal minimum particle size of 2 is required

B. Acceptable aggregate dimensions will not exceed 2.5:1.0 for any two dimensions chosen.

C. Minimum 90 percent with one fractured face, minimum 75 percent with two or more fractured faces.

2.05 WATER

A. The Contractor shall be responsible to furnish his own supply of water to the site at no extra cost. All work injured or damaged due to the lack of water, or the use of too much water, shall be the Contractors responsibility to correct. Water shall be free from impurities injurious to vegetation.

2.06 STRUCTURAL SOIL MIX

A. A uniformly blended mixture of Crushed Stone and Clay Loam, mixed to the following proportion:

MATERIAL	UNIT OF WEIGHT
Crushed Stone	100 units dry weight
Loam	As determined by testing of the mix (Approx. 20 units)
Total Moisture	AASHTO T-99 Optimum Moisture

B. The initial mix design for testing shall be determined by adjusting the ratio between the Crushed Stone and the Clay Loam. Adjust final mix dry weight mixing proportion to decrease soil in mixture if CBR test results fail to meet acceptance (CBR # 50).

3.0 <u>CONSTRUCTION METHODS</u>

3.01 MIX DESIGN

A. Prepare sample Structural Soil mixes to determine the ratio of mix components. Submit for approval.

3.02 SOIL MIXING AND QUALITY CONTROL TESTING

A. All Structural Soil mixing shall be performed at the Contractor's or Supplier's yard using appropriate soil measuring, mixing, and shredding equipment of sufficient capacity and capability to assure proper quality control and consistent mix ratios. No mixing of Structural Soil at the project site shall be permitted. Portable pugging may be used.

1. Maintain adequate moisture content during the mixing process. Soils and mix components shall easily shred and break down without clumping. Soil clods shall easily break down into a fine crumbly texture. Soils shall not be overly wet or dry. The contractor shall measure and monitor the amount of soil moisture at the mixing site periodically during the mixing process. Mixing may be accomplished via either of the following methods.

2. A mixing procedure utilizing a front-end loader shall be as follows:
   a. On a flat asphalt or concrete paved surface, spread an 8 inch to 12 inch layer of crushed stone.
   b. Spread over the crushed stone a proportional amount of clay loam according to the mix design.
   c. Blend the entire amount by turning, using a front-end loader or other suitable equipment until a consistent blend is produced.
   d. Add moisture gradually and evenly during the blending and turning operation at time of installation as required to achieve the required moisture content. Delay additional applications of moisture, if needed, for 10 minutes to allow time for absorption. Mixing should produce a material within 1% of the optimum moisture level for compaction.

3. A mixing procedure utilizing a pug mill may be as follows:
   a. Feed a known weight of crushed stone into the mixing trough.
   b. Meter in the proper proportion of Clay-loam Soil, while stone mixture is in motion.

c. Add water to bring mixture to target moisture content after factoring in water from the slurry and the Clay-loam moisture.

d. Auger out to stock pile or transport vehicle.

B. The Contractor shall mix sufficient dry material in advance of the time needed at the job site to allow adequate time for final quality control testing as required by the progress of the work. Structural Soil shall be stored in piles not to exceed 500 cubic yards. If multiple stockpiles are necessary, each pile shall be numbered for identification and quality control purposes. Storage piles shall be protected from rain and erosion by covering with tarps or plastic sheeting. Moisture shall be added to the dry materials at time of installation.

3.03 UNDERGROUND UTILITIES AND SUBSURFACE CONDITIONS

A. Notify the Architect/Engineer of any subsurface conditions which will affect the Contractor's ability to complete the work.

B. Locate and confirm the location of all underground utility lines and structures prior to the start of any excavation.

C. Repair any underground utilities or foundations damaged by the Contractor during the progress of this work. The cost of all repairs shall be at the Contractor's expense.

3.04 SITE PREPARATION

A. Do not proceed with the installation of the Structural Soil material until all walls, curb footings and utility work in the area have been installed, except as follows. For site elements dependent on Structural Soil for foundation support, postpone installation until immediately after the installation of Structural Soil.

B. Excavate and compact the proposed sub-grade to depths, slopes, and widths as shown on the contract Drawings. Maintain all required angles of repose of the adjacent materials as shown on the drawings. Do not over excavate compacted sub-grades of adjacent pavement or structures.

C. Confirm that the sub-grade is at the proper elevation and compacted as required. Sub-grade elevations shall slope parallel to the finished grade unless otherwise shown on the drawings.

D. Clear the excavation of all construction debris, trash, rubble and any foreign material. In the event that fuels, oils, concrete washout silts or other material harmful to plants have been spilled into the sub-grade material, excavate the soil sufficiently to remove the harmful material. Fill any over excavation with approved fill and compact to the required sub-grade compaction.

E. Protect adjacent walls, walks and utilities from damage or staining by the soil. Use 1/2" plywood and or plastic sheeting as directed to cover existing concrete, metal and masonry work and other items as directed during the progress of the work.

1. Clean up all trash and any soil or dirt spilled on any paved surface at the end of each working day.

2. Any damage to the paving or architectural work caused by the soils installation Contractor shall be repaired by the general Contractor at the soils installation Contractor's expense.

F. Maintain all silt and sediment control devices required by applicable regulations. Provide adequate methods to assure that trucks and other equipment do not track soil from the site onto adjacent property and the public right of way.

3.05 INSTALLATION OF STRUCTURAL SOIL MATERIAL

A. Install Structural Soil in 6 inch lifts and compact each lift.

B. Compact all materials to peak dry density from a standard AASHTO compaction curve (AASHTO T 99). No compaction shall occur when moisture content exceeds maximum as

listed herein. Delay compaction 24 hours if moisture content exceeds maximum allowable and protect Structural Soil during delays in compaction with plastic or plywood as directed by the Architect/Engineer.

C. Bring Structural Soils to finished grades as shown on the Drawings. Immediately protect the Structural Soil material from contamination by toxic materials, trash, debris, water containing cement, clay, silt or materials that will alter the particle size distribution of the mix with plastic or plywood as directed by the Architect/Engineer.

D. The Architect/Engineer may periodically check the material being delivered and installed at the site for mix consistency with the approved sample provided by the Contractor as part of the submittal for Structural Soil. Any soil which varies significantly from the approved, as determined by the Architect/Engineer, shall be removed and new Structural Soil installed that meets these specifications.

3.06 FINE GRADING AND ACCEPTANCE

The Architect/Engineer will inspect the work upon the request of the Contractor prior to placement of paving over the structural soils. Request for inspection shall be received by the Engineer at least 3 days before the anticipated date of inspection.

3.07 CLEAN-UP

A. Upon completion of the Structural Soil installation operations, clean areas within the contract limits. Remove all excess fills, soils and mix stockpiles and legally dispose of all waste materials, trash, and debris. Remove all tools and equipment and provide a clean, clear site. Sweep, do not wash, all paving and other exposed surfaces of dirt and mud until the paving has been installed over the Structural Soil material. Do no washing until finished materials covering Structural Soil material are in place.

END OF SECTION

7800 E. Michigan Ave.
Kalamazoo, Michigan 49048
Phone: (800) 521-2546
Fax: (269) 381-3455
www.landscapeforms.com
specify@landscapeforms.com

Trapecio Bench
Product Guide Specification

Specifier Notes: This product guide specification is written according to the Construction Specifications Institute (CSI) 3-Part Format, including *MasterFormat, SectionFormat,* and *PageFormat,* as described in *The Project Resource Manual—CSI Manual of Practice, Fifth Edition.*

The section must be carefully reviewed and edited by the Architect to meet the requirements of the project and local building code. Coordinate this section with other specification sections and the Drawings. Delete all "Specifier Notes" after editing this section.

Section numbers are from *MasterFormat 2010 Edition*.

SECTION 12 93 43.13 SITE SEATING

Specifier Notes: This section covers Landscape Forms, Inc. "Trapecio" benches. Consult Landscape Forms, Inc. for assistance in editing this section for the specific application.

PART 1 GENERAL

1.1 SECTION INCLUDES

A. Benches.

1.2 REFERENCES

Specifier Notes: List standards referenced in this section, complete with designations and titles. This article does not require compliance with standards, but is merely a listing of those used.

A. ANSI/BIFMA Testing Standards:
   1. ANSI/BIFMA X5.4-2005 – Standard Test for Lounge Seating.

1.3 SUBMITTALS

A. Product Data: Submit manufacturer's product data, storage and handling requirements and recommendations, installation methods and available colors, styles, patterns and textures.
B. Shop Drawings: Submit manufacturer's shop drawings, including plans and elevations, indicating overall dimensions.
C. Samples: Submit manufacturer's samples of materials, finishes, and colors.
D. Warranty: Manufacturer's standard warranty.

1.4 QUALITY ASSURANCE

A. Manufacturer's Qualifications: Manufacturer regularly engaged in manufacture of site furnishings since 1969.
B. Product Support: Products are supported with complete engineering drawings and design patents.

C. Base Worth: An installed base of products worth in excess of one hundred million dollars.
D. Assets: Excess of twenty million dollars in assets.
E. Production: Orders are filled within a 40-day schedule.
F. Facility Operator: Welders and machine operators are certified.

1.5 DELIVERY, STORAGE, AND HANDLING

A. Delivery: Deliver materials to site in manufacturer's original, unopened containers and packaging, with labels clearly identifying product name and manufacturer.
B. Storage: Store materials in clean, dry area in accordance with manufacturer's instructions. Keep materials in manufacturer's original, unopened containers and packaging until installation.
C. Handling: Protect materials and finish during handling and installation to prevent damage.

1.6 WARRANTY

A. Warranty Information:

-Products will be free from defects in material and/or workmanship for a period of three years from the date of invoice.

-The warranty does not apply to damage resulting from accident, alteration, misuse, tampering, negligence, or abuse.

- Landscape Forms, Inc. shall, at its option, repair, replace, or refund the purchase price of any items found defective upon inspection by an authorized Landscape Forms service representative.

-Purchasers should be aware that normal use of these high quality products can result in superficial damage affecting the finish. Scratches, nicks, and dents are to be considered normal wear and tear, and are not the responsibility of the manufacturer.

PART 2 PRODUCTS

2.1 MANUFACTURER

A. Landscape Forms, Inc., 7800 E. Michigan Ave, Kalamazoo, Michigan 49048.
Phone: (800) 521-2546. Fax (269) 381-3455. Website www.landscapeforms.com
E-mail: specify@landscapeforms.com

2.2 BENCHES

A. "Trapecio" Benches
B. Style:
1. Backed
-Depth: 32 inches.
-Overall Height: 26-1/2 inches.
-Length: 212-1/4 inches.
-Back Length: 177 inches.
-Seat Length: 177 inches.
C. Mounting:
1. Surface mount at grade, seat height is 19-1/4".
2. Surface mount below grade, seat height is 16-1/4".

2.3 MATERIALS

A. Support: 6-3/4" wide x 3/8" thick steel plate, welded together, Hot Dip Galvanized per ASTM A123 / A123-09
B. Hardware: Seat and back panels are bolted to supports with 1/2" x 3" lag screws and washers with hot-dipped galvanized coating.
C. Seat and Back Panels: Wood assembly, glue-lam construction, machined to finished size.
1. Wood for Exterior Use:
- Alaskan Yellow Cedar

2.4 ACCESSORIES

Specifier Notes: Anchor bolts are included.

A. Anchor Bolts: 1/2-13 x 5-1/2" threaded rods, magni-coated, with 1/2-13 hot dip galvanized hex nuts and galvanized steel flat washers.

2.5 RECYCLED CONTENT

A. Benches:
-Recycled Material Content: Minimum 14 percent.
-Post-Consumer Material Content: Minimum 9 percent.
-Pre-Consumer Material Content: Minimum 5 percent.
-Recyclable: 100 percent.

2.6 FABRICATION

A. Shop assembled supports.

2.7 FINISHES

A. Finish on Metal: Hot dipped galvanized with a natural silver color. To ASTM A123 / A123-09
B. Finish on Wood:
1. Wood for Exterior Use:
a. Alaskan Yellow Cedar: Unfinished.

PART 3 EXECUTION

3.1 EXAMINATION

A. Examine areas to receive benches.
B. Notify Architect of conditions that would adversely affect installation or subsequent use.
C. Do not begin installation until unacceptable conditions are corrected.

3.2 INSTALLATION

A. Install benches in accordance with manufacturer's instructions at locations indicated on the Drawings.
B. Install benches level.
C. Anchor benches securely in place.

3.3 ADJUSTING

A. Finish Damage: Repair minor damages to finish in accordance with manufacturer's instructions and as approved by Architect.
B. Component Damage: Remove and replace damaged components that cannot be successfully repaired as determined by Architect.

3.4 CLEANING

A. Clean benches promptly after installation in accordance with manufacturer's instructions.
B. Do not use harsh cleaning materials or methods that could damage finish.

3.5 PROTECTION

A. Protect installed benches to ensure that, except for normal weathering, benches will be without damage or deterioration at time of Substantial Completion.

END OF SECTION

Bol 8' – 24' Round Tapered and Straight Wood Poles

FIXTURE TYPE: _____

PROJECT NAME: _____

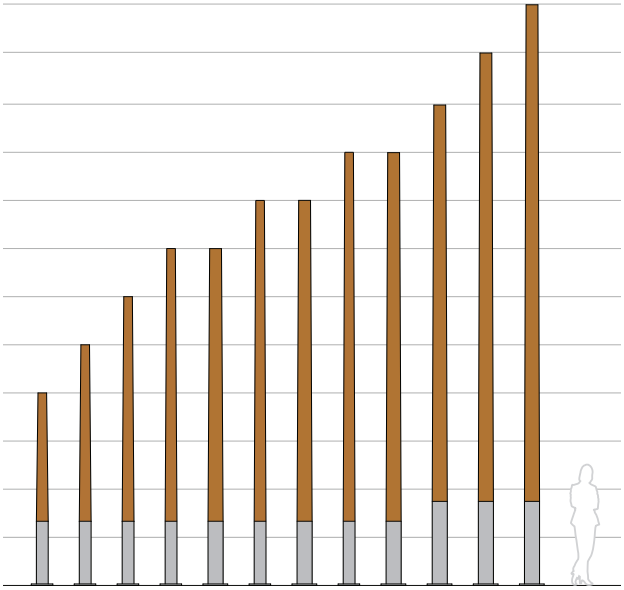

Round Taper

Glulam solid wood and aluminum pole available in 8′ – 24′ lengths. Tenon adapters, slip fitters and side bracket mounts are available for luminaire mounting.

FEATURES:

- Round extruded aluminum pole base with flush handhole cover held with countersunk stainless steel fasteners.
- Tapered, round, solid glulam wood pole

SPECIFICATIONS:

HOUSING: Solid wood pole is assembled through glulam construction and precision machined using CNC technology. An electrical raceway is provided in the pole's center for wiring. Laminations measure no more than 2" in thickness. Adhesive complies with ASTM D-2559 glulam construction specifications for extreme exposed weather conditions, is waterproof and rated for wet or dry use exposure.

Glulam wood shaft is fastened to aluminum pole base welded to a 3/4" thick aluminum anchor bolt base. Anchor bolt kit includes (4) 3/4" hot dip galvanized anchor bolts and fasteners and ridged concrete pour template.

FIXTURE MOUNTING: Fixtures mount either by 2 3/8", 2 7/8", 3 1/2", or 4" diameter by 4" tall tenon or drill mount for arm brackets. Consult factory for other tenon sizes. Luminaires shall be provided by others.

ELECTRICAL: A 5/16" – 18 grounding point is provided on the aluminum pole base. Wireway access is provided through a NEC compliant handhole with a flush, gasketed cover plate.

FINISHES AND MATERIALS: Woods are finished with a low VOC waterborne matte exterior finish containing UV and mildew inhibitors. All aluminum parts are polyester powder coat painted.

HARDWARE: Fasteners are stainless steel. Anchor bolt kits are hot dip galvanized.

© 2014 STRUCTURA INC.

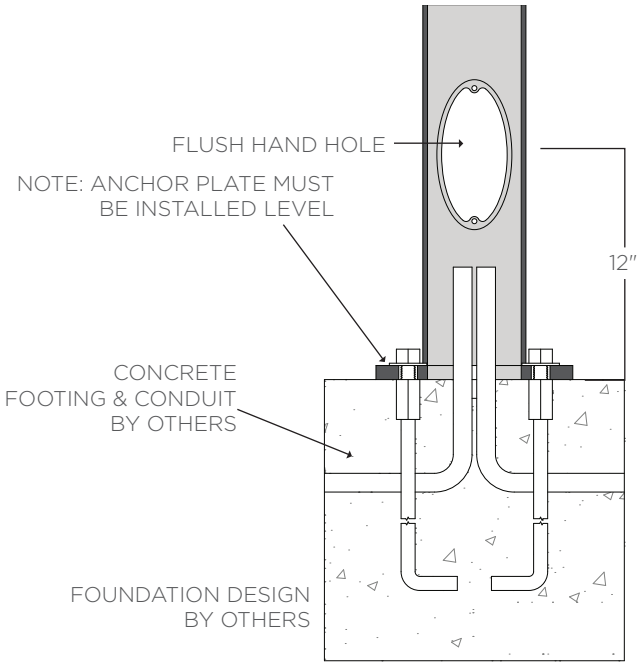

	Bolt Circle	Conduit Opening
5.5″ Base	8.5″ dia	5″ dia.
7.0″ Base	10″ dia.	6.5″ dia.

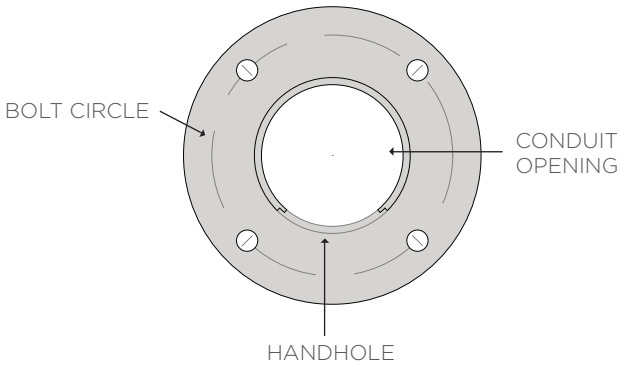

ORDERING GUIDE: EXAMPLE: BOL-S-12-55-55-S3-SILTX-T3124-STD

The mark of responsible forestry
FSC® C102326

BOL								
1	2	3	4	5	6	7	8	9

1 — Series

BOL	Bol

2 — Shaft Shape

T	Round Tapered
S	Round Straight

3 — Height

8	8′
10	10′
12	12′
14	14′
16	16′
18	18′
20	20′
22	22′
24	24′

4 — Base Diameter

55	5.5″ – 20′ Maximum Height
70	7.0″ – 24′ Maximum Height

5 — Top Diameter

40	4.0″
55	5.5″
70	7.0″

6 — Wood Finish

S*	See color options on finishes technical sheet

7 — Metal Finish

********	See color options on finishes technical sheet
CSM	Custom Color

8 — Fixture Mounting

Tenon	
T2384	2 3/8″ x 4″ Tenon
T2784	2 7/8″ x 4″ Tenon
T3124	3 1/2″ x 4″ Tenon
T4004	4″ x 4″ Tenon
TXXX	Specify diameter and height
Drill	
D1	1 @ 90deg
D2	2 @ 180deg
D3	2 @ 90deg
D4	3 @ 90deg
D5	4 @ 90deg

9 — Special

STD	Standard
MOD	Modified

© 2014 STRUCTURA INC.

Bol – RSQ 8' – 24' Round Tapered to Square Pole

FIXTURE TYPE: _____

PROJECT NAME: _____

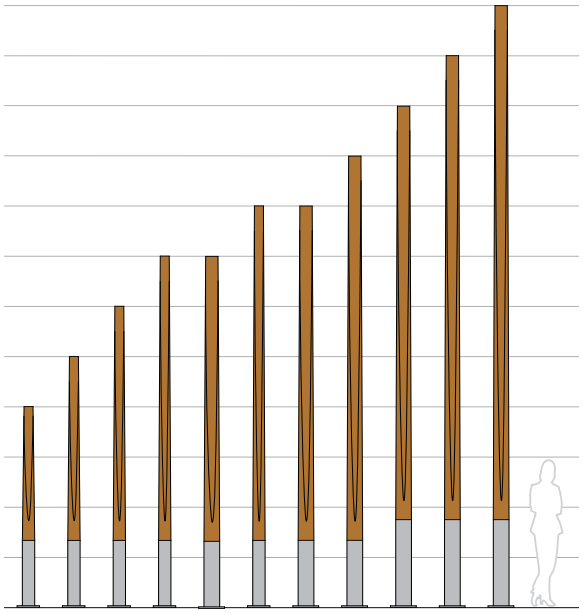

Round Tapered to Square

Glulam solid wood and aluminum pole available in 8' – 24' lengths. Tenon adapters, slip fitters and side bracket mounts are available for luminaire mounting.

FEATURES:

- Unique CNC machined, round cross section at the base tapering to square cross section at the pole's top.
- Solid glulam wood construction.
- Round extruded aluminum pole base with flush handhole cover held with countersunk stainless steel fasteners.

SPECIFICATIONS:

HOUSING: Solid wood pole is assembled through glulam construction and precision machined using CNC technology. The pole's cross section begins round at the base and tapers to a square cross section at the top. An electrical raceway is provided in the pole's center for wiring. Laminations measure no more than 2" in thickness. Adhesive complies with ASTM D-2559 glulam construction specifications for extreme exposed weather conditions, is waterproof and rated for wet or dry use exposure.

Glulam wood shaft is fastened to aluminum pole base welded to a 3/4" thick aluminum anchor bolt base. Anchor bolt kit includes (4) 3/4" hot dip galvanized anchor bolts and fasteners and ridged concrete pour template.

FIXTURE MOUNTING: Fixtures mount either by 2 3/8", 2 7/8", 3 1/2", or 4" diameter by 4" tall tenon or drill mount for arm brackets. Consult factory for other tenon sizes. Luminaires shall be provided by others.

ELECTRICAL: A 5/16" – 18 grounding point is provided on the aluminum pole base. Wireway access is provided through a NEC compliant handhole with a flush, gasketed cover plate.

FINISHES AND MATERIALS: Woods are finished with a low VOC waterborne matte exterior finish containing UV and mildew inhibitors. All aluminum parts are polyester powder coat painted.

HARDWARE: Fasteners are stainless steel. Anchor bolt kits are hot dip galvanized.

© 2014 STRUCTURA INC.

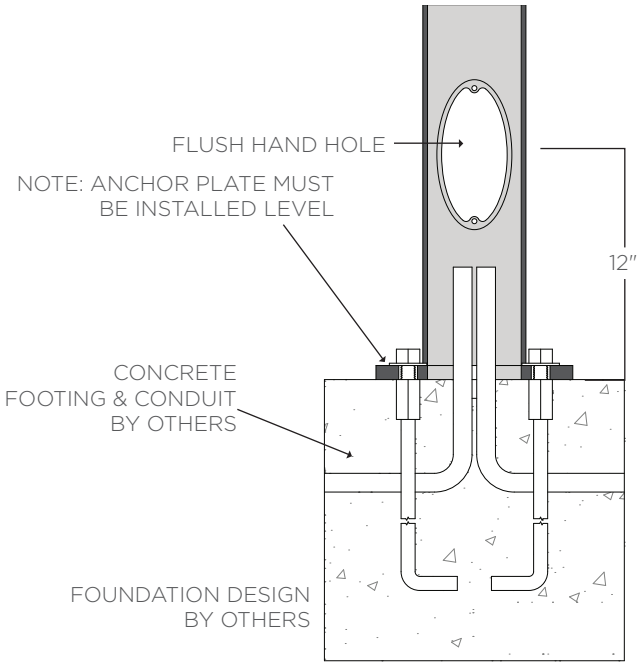

	Bolt Circle	Conduit Opening
5.5″ Base	8.5″ dia	5″ dia.
7.0″ Base	10″ dia.	6.5″ dia.

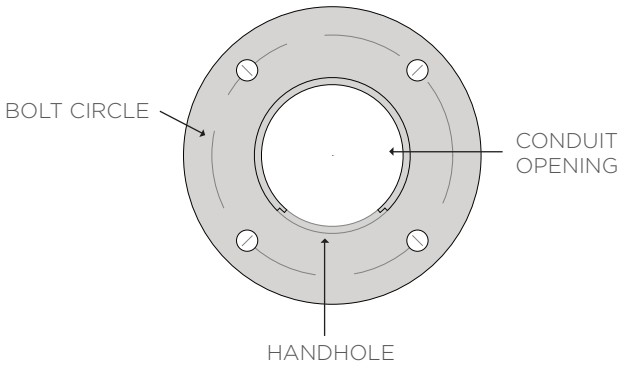

ORDERING GUIDE: EXAMPLE: BOL-RSQ-16-55-40-S4-DBZ-D2-STD

The mark of responsible forestry
FSC® C102326

BOL	RSQ			40				
1	2	3	4	5	6	7	8	9

1	Series
BOL	Bol

2	Shaft Shape
RSQ	Round Tapered to Square

3	Height
8	8′
10	10′
12	12′
14	14′
16	16′
18	18′
20	20′
22	22′
24	24′

4	Base Diameter
55	5.5″ – 16′ Maximum Height
70	7.0″ – 24′ Maximum Height

5	Top Width
40	4.0″

6	Wood Finish
S*	See color options on finishes technical sheet

7	Metal Finish
********	See color options on finishes technical sheet
CSM	Custom Color

8	Fixture Mounting
Tenon	
T2384	2 3/8″ x 4″ Tenon
T2784	2 7/8″ x 4″ Tenon
T3124	3 1/2″ x 4″ Tenon
T4004	4″ x 4″ Tenon
TXXX	Specify diameter and height
Drill	
D1	1 @ 90deg
D2	2 @ 180deg
D3	2 @ 90deg
D4	3 @ 90deg
D5	4 @ 90deg

9	Special
STD	Standard
MOD	Modified

© 2014 STRUCTURA INC.

Bol – REV Custom Reverse Taper Pole

FIXTURE TYPE: _____

PROJECT NAME: _____

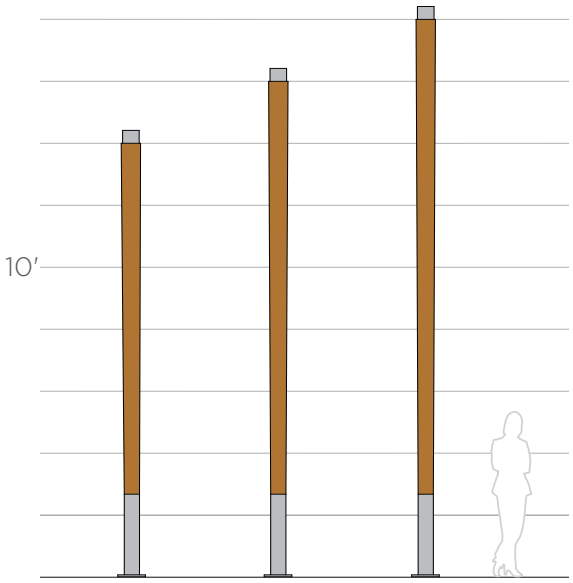

Custom Reverse Round Taper

Glulam solid wood and aluminum pole available in custom lengths. Tenon adapters are available for luminaire mounting.

FEATURES:

- Custom CNC machined reverse tapered round pole per project requirements.
- Standard and custom tenons available per luminaire and project requirements.
- Solid glulam wood construction.
- Round extruded aluminum pole base with flush handhole cover held with countersunk stainless steel fasteners.

SPECIFICATIONS:

HOUSING: Solid wood pole is assembled through glulam construction and precision machined using CNC technology. Reverse taper is provided per project requirements. Consult factory for options. An electrical raceway is provided in the pole's center for wiring. Laminations measure no more than 2" in thickness. Adhesive complies with ASTM D-2559 glulam construction specifications for extreme exposed weather conditions, is waterproof and rated for wet or dry use exposure.

Glulam wood shaft is fastened to aluminum pole base welded to a 3/4" thick aluminum anchor bolt base. Anchor bolt kit includes (4) 3/4" hot dip galvanized anchor bolts and fasteners and ridged concrete pour template.

FIXTURE MOUNTING: Fixtures mount by tenon adapters. Consult factory for tenon sizes per project luminaire requirements. Luminaires shall be provided by others.

ELECTRICAL: A 5/16" – 18 grounding point is provided on the aluminum pole base. Wireway access is provided through a NEC compliant handhole with a flush, gasketed cover plate.

FINISHES AND MATERIALS: Woods are finished with a low VOC waterborne matte exterior finish containing UV and mildew inhibitors. All aluminum parts are polyester powder coat painted.

HARDWARE: Fasteners are stainless steel. Anchor bolt kits are hot dip galvanized.

© 2014 STRUCTURA INC.

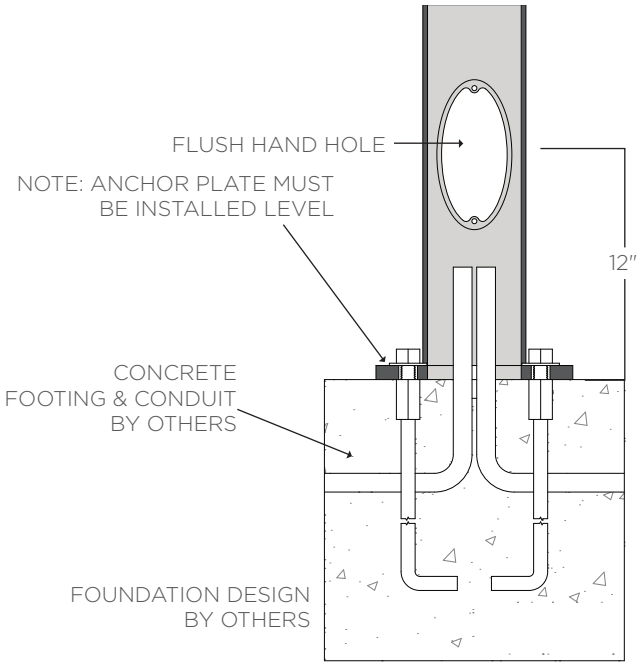

	Bolt Circle	Conduit Opening
5.5″ Base	8.5″ dia	5″ dia.
7.0″ Base	10″ dia.	6.5″ dia.

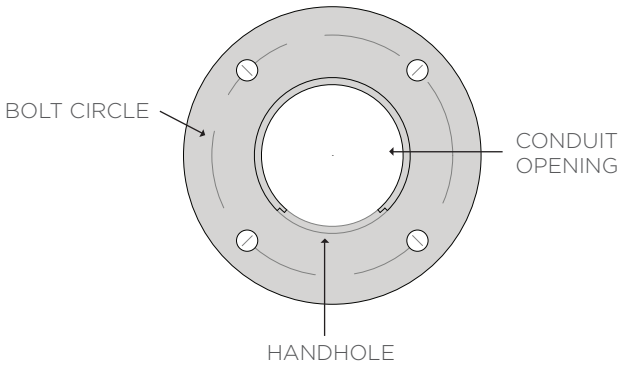

ORDERING GUIDE: EXAMPLE: BOL-REV-12-55-60-S5-CHRTX-T4004-STD

The mark of responsible forestry
FSC® C102326

BOL	REV		55					MOD
1	2	3	4	5	6	7	8	9

1 — Series
- **BOL** — Bol

2 — Shaft Shape
- **REV** — Custom Reverse Round Taper

3 — Height
- **XX** — Specific Height in Feet (consult factory)

4 — Base Diameter
- **55** — 5.5″

5 — Top Diameter
- **XX** — Specify in inches

6 — Wood Finish
- **S*** — See color options on finishes technical sheet

7 — Metal Finish
- ******** — See color options on finishes technical sheet
- **CSM** — Custom Color

8 — Fixture Mounting
- **TXXX** — Specify tenon, diameter and height in inches

9 — Special
- **STD** — Standard
- **MOD** — Modified

© 2014 STRUCTURA INC.

General Specifications for Lighted Crosswalk Warning Equipment and Miscellaneous Materials, Rev 4

Lighted Crosswalk Warning Equipment and Miscellaneous Materials

1) Quality of Materials and Equipment
2) Technical Specifications: Lighted Crosswalk Warning Equipment and Miscellaneous Materials
3) Logic Control Device and Enclosure
4) Solar Powered Logic Control Device and Enclosure
5) In-Pavement Signal Heads
6) Mounting Bases
    a. Standard Composite
    b. Steel Snowplow Blade Resistant
7) Roadway Conductors
    a. In-Roadway
    b. Non-In-Roadway
    c. Conduit
8) LED Enhanced Pedestrian Crossing Symbol Signs
9) Activation Devices
    a. Bollards
    b. Push-buttons
10) Manufacturer's System Assurance

(Name of Agency) will receive bids for providing all materials, labor, transportation, insurance, testing, and documentation required for furnishing Accessible Pedestrian Equipment and Miscellaneous Materials as described in these Technical Specifications. Bid prices shall be good for one year after award of bid.

Time being of the essence the bidder shall make best effort to deliver the materials within the delivery times shown above upon the receipt of the delivery order for any item or group of items embraced within this bid.

All material shall be new and of good quality. All workmen fabricating products described within the Technical Specifications shall be skilled in their trades and all workmanship shall be of good quality. The Bidder guarantees the products or work to be free of defective materials or workmanship for a period of at least one (2) years from the date of final certificate of payment is approved by (Name of Agency).

Where the Technical Specifications refer to specific products of one or more manufacturers or vendors, such references designate the specific items comprising the base bid, and the base bid must be based on these specific products, however they are not intended to restrict competitive bidding. Substitutions for materials specified by name may be offered as a voluntary alternate. (Name of Agency) Project Manager shall decide if equivalent materials are acceptable. Whenever the word "APPROVED" is used in these Technical Specifications, it shall be interpreted as meaning approved specifically by (Name of Agency) Project Manager.

The Bidder and each of its subcontractors shall be responsible for the proper care and protection of all their materials until delivery of same is accepted by (Name of Agency). The Bidder shall be responsible for loss or damage for any reason what so ever until delivery is accepted by an authorized representative of (Name of Agency). The Bidders responsibility shall include the replacement of lost or damaged material to the (Name of Agency) delivery point within the time allotted for the delivery as defined in the contract schedule.

1) Quality of Materials and Equipment

The Specifications require that the materials and equipment furnished under this agreement be of high quality, manufactured and supported by reputable and qualified vendors. Where materials and/or equipment are designated in the Technical Specifications by mention of the manufacturer's name, make, brand, or model, it shall be considered as indicating a standard of quality, style, grade, or type. The Bidder's proposal shall include as a base bid, unless specifically exempted, materials and equipment so specified. If the Bidder's proposal is accepted, it shall be the obligation of the Bidder to furnish such materials and equipment unless substitutions are allowed by the acceptance of a voluntary alternate. For this specific Bid, catalog cuts and complete descriptive material must be submitted with the Bid. The submission shall consist of catalog cuts or other descriptive literature that includes the following:

• Physical descriptions of all equipment
• Technical descriptions of all equipment
This material shall be included in a bound binder labeled CATALOG CUTS, Lighted Crosswalk Warning Equipment, and Miscellaneous Materials Contract.

2) Technical Specifications – Lighted Crosswalk Warning Equipment and Miscellaneous Materials

The purpose of this bid is to seek a pricing for various equipment needed to provide for a complete comprehensive Lighted Crosswalk Warning System for mid-block crosswalks. (Name of Agency) envisions a system and/or compliment of components that will utilize a series of signal heads with light emitting diodes (LED) in durable housings which will be embedded in the roadway. The LED's shall flash, in a unidirectional manner, and act as a warning to approaching motorists that a pedestrian is in, or entering, the crosswalk. The system shall be capable of being activated by a push-button or automatically activated when a pedestrian passes through an activation zone breaking an optical beam. The system should also be capable of being a stand-alone solar powered system or a conventional AC powered system (AC to DC) with battery back-up.

The installed system shall comply with National Electric Code (NEC) Article 300, Chapter 7, Section 725-3 rated as “Low Voltage”. The System shall be installed to manufacturers recommended specifications and conform to federal, state or local regulations. The system shall meet the requirements for In-Roadway Warning Light systems as found in the Federal Highway Administration MUTCD Section 4L standards. The system shall have the Enlightened 1™ flash rate, a tested, proven, and effective superior flash rate with U.S. Patent Number 6,384,742 B1 for Pedestrian Crosswalk Signal Apparatus – Pedestrian Crosswalk.

The parts and equipment needed listed above are further specified as follows:

3) Logic Control Device:

<u>System Notification Capable, Remote Data Available:</u> The system shall be able to automatically transmit system notifications to the board mounted 8-bit microcomputer by an interconnect RS 232 protocol. Usage data stored in the system microcomputer showing activation time and dates shall be accessible via the network. The system shall be able to transmit this data via RS 232 port.

The system shall include a logic control device designed to run all timing parameters, keep count of the number of valid activations received and monitor the system for basic faults. The logic device shall include a 2 line by 20-character LCD display. The device shall be capable of displaying messages to help

the user determine the status of the system. Messages are displayed on the screen based user selections. Either the onsite or remote user shall be able to view messages being displayed.

When triggered by a push button input, the unit will commence operation. A panel indicator shall indicate that the output is enabled. Run time shall be re-trigger able, meaning that if another button input is received while the system is in the run mode, the elapsed time function shall be reset to 0, and the count started over again which has the effect of extending the run time of the unit. The normal flash rate for the lamps will be set to 50-60 flash cycles per minute.

The device shall allow the user to modify the timing parameters for run time by using the LCD screen and the user buttons on the face of the device. User activations for crosswalk applications shall allow for the programming of run times from 1-99 seconds in duration. The device shall provide a minimum of one-10A circuit to drive the flasher circuit. The device shall also be capable of accepting replacement module for field upgrade of the software.

The logic control device software shall be capable of running diagnostics from a user push button located on the control panel or by a remote operator. During the diagnostic mode, the unit will display a message on the LCD screen indicating it is in this mode. The software shall also allow one input to be a manual override function for special event use in which continuous operation would be needed.

During manual override, the system shall display a message to this effect on the LCD screen so that the user is aware of the operational mode. For crosswalk applications, the unit shall be capable of incorporating time clock based operation of the flashers for applications such as school crossings. The software shall allow a basic program to be run that provides up to 3 on cycles per day. A data sheet on the device shall be included with the bid submission or the response shall be considered incomplete.

Enclosure:
The enclosure shall meet NEMA 6 standard with a fiberglass construction and have a lockable latch. The enclosure shall be white in color, measuring 19 5/8" height x 17 1/8" wide x 8 1/4" deep.

General Performance Specifications

Parameter	Value
Power consumption	1 watt (in standby mode)
Operating Temp	0°C to +50°C
Input Operating Voltage	120 VAC or 240 VAC
Input Current Protection	5A fast acting (2 pole circuit breaker)
Input Surge Suppression	3000 Joules per pole, 100,000 Amps
Output Operating Voltage	13.5 VDC to 15VDC
Output DC Load maximum	10 Amps
Enclosure Type	NEMA 6 Fiberglass w/ padlock latch
Enclosure Color	White (standard)
Enclosure Size	19” x 17” x 8”
Battery Backup	12AH SLA

4) Solar Power Source - Logic Control Device and Enclosure:

The system shall also have the capability to utilize a solar power such that it can be incorporated into the System to permit stand-alone operation. The system should maintain continuous operation between recharges for approximately three (3) days with automatic activation features and up to six (6) days without automatic activation. An appropriate enclosure shall meet the following criteria.

General Performance Specifications

Parameter	Value
Power consumption	1 watt (in standby mode)
Operating Temp	0°C to +50°C
Input Operating Voltage	17 VDC solar panel (peak sun)
Input Current Protection	10A fast acting circuit breaker
Input Solar Panel Power	80 watts @ 4.7A (peak sun)
Output Operating Voltage	13.5 VDC to 15VDC
Output DC Load maximum	10 Amps
Enclosure Type	NEMA 6 Fiberglass (padlock latch)
Enclosure Color	White (standard)
Enclosure Size	32” x 15” x 15”

5) <u>In-pavement Lighting Fixtures and Mounting Bases</u>

System Modules: Signal Head System 9

Model Construction:

The signal head module shall be uni-directional with a clear UV resistant acrylic “dove” prism installed in front of the LED modules. The signal head module shall be completely sealed thereby preventing moisture intrusion from the roadway or from internal condensation. There shall be a minimum of 16 LED lamps in the signal head module.

The in-pavement LED signal light source shall be visible above the roadway surface no less than by 1/8th inch and oriented towards approaching traffic. The signal head module shall be securely attached to the roadway base by 4 recessed stainless steel socket head ¼"-20 screws.

A watertight connector shall be installed at the factory which connects the sealed solid-state signal head module LED electronic components and the wiring cable to the IRWL system. The fixture shall operate on 12V DC.

The signal head module shall be fabricated from high strength reinforced fiberglass composite of polyurethane/nylon. The signal head module shall protrude no more that .5 inch above the roadway surface and the lighting fixture shall have a black finish.

Photometric Performance:

In-roadway lighting fixtures shall be light emitting diode (LED) type. The light source shall be amber AlInGaP, non-diffused LED lamps. The number of internal signal head module LED lamps shall be 16 and shall be visible a minimum of 400 feet in advance of the crosswalk**.**

The LED signal head module lamps shall flash at the Enlighten 1™ flash rate which meets or exceeds standards established by the Federal Highway Administration Manual on Uniform Traffic Control Devices, Section 4N.

General Performance Specifications

Parameter	Value
Visibility	± 20 °
Operating Temp	−20° to +80°C
Operating Voltage	9VDC to 15VDC
DC Current @ 12VDC	0.2 Amps
Avg Power Dissipation	2.5 Watts
Luminous Intensity	252,000 mcd
Material	Polyurethane/Nylon
Color	Black

6) Mounting Base Plates

a. Standard Composite

The mounting base plate shall be manufactured from high strength fiberglass composite material, 10 inches in diameter and 1.5 inch in height, black in color. The standard base plate shall be manufactured with Self Clearing Debris Free™ Design.

The signal head module shall be mounted into a base plate assembly with 4 recessed stainless steel socket head ¼"-20 screws, field installed and tightened to no more than 4 lbs torque. The installing contractor shall return to the site installation with in a two-week period to check the mounting screw tension and, if necessary, re-torque the mounting screw to the prescribed 4 lb torque pressure.

Each screw shall have thread lock, anti-seize compound applied to the threads in the factory. The steel base plate shall have a .75-inch diameter-cabling hole in the center of the base plate. The base plate shall contain a horseshoe shaped O-ring inserted into the signal head module lip shelf.

b. Steel Snow Blade Resistant:

The mounting base plate shall be manufactured from case hardened steel coated with a corrosion resistant gray colored marine grade epoxy steel primer. The steel base plate shall be 14 inches in diameter and 1.5 inch in height. The steel base plate shall be manufactured with Self Clearing Debris Free™ Design.

The signal head module shall be mounted into a base plate assembly with 4 recessed stainless steel socket head ¼"-20 screws, field installed and tightened to no more than 4 lbs torque. Each screw shall have thread lock, anti-seize compound applied to the threads in the factory. The steel base plate shall have a .75-inch diameter-cabling hole in the center of the base plate. The base plate shall contain a horseshoe shaped O-ring inserted into the signal head module lip shelf.

7) Conductors

a. In-Roadway Conductors:

In-roadway conductors for lighting fixtures shall be stranded #14 AWG, Type RHW (600 V power cables, 90°C dry, and 75°C wet). The In-roadway conductors shall be YEL, RED, and BLK in color. The in -roadway conductors shall be installed according to National Electric Code (NEC) Article 300, Chapter 7, Section 725-3 standards.

In-roadway conductors may be direct buried (No min. depth required per NEC). The in-roadway conductors for activation devices, pedestrian crossing or traffic symbol signs, and additional components shall be multi-stranded #18 AWG multi-conductor stranded, (7x26) bare copper conductors, PVC/Nylon insulation, overall Beldfoil® shield (100% coverage) with drain wire, PVC jacket. In-roadway conductors may be direct buried (No minimum depth required per NEC).

b. Non-In Roadway Conductors:

Non in-roadway conductors shall be stranded #18 AWG, Type RHH or RHW-2 (Type EPR/Hypalon 600-volt power cables, 90°C dry and 75°C wet), unless installed in conduit.

c. Conduit:

When required shall be type 1 or 3.

8) LED Enhanced Signage:

All signage shall comply with MUTCD standards. The signs shall be manufactured from minimum .08-inch high-grade aluminum coated with 3M Diamond Grade Reflective Sheeting, meeting, or exceeding, ASTM standards for Type III, IV, and IX sheeting.

Each LED module shall operate on 12 V DC and shall employ the Enlighten 1™ flash rate operating at a 50% duty cycle. Each LED module shall be placed in a metal conduit weatherproof housing and securely attached to the sign.

General Performance Specifications

Parameter	**Value**
Visibility	± 20 °
Operating Temp	−20° to +80°C
Operating Voltage	9VDC to 15VDC
DC Current @ 12VDC	0.5Amps
Average Power Dissipation	5 Watts
Luminous Intensity	250,000 mcd
Retro-reflective	Diamond Grade
Background Color	Fluorescent YEL/GRN

9) Activation Devices

a. Automatic Activation Bollards:

The automatic activation bollard units shall be constructed of a cylinder shape painted white anodized aluminum housing. The dimensions shall be 42" height x 8" diameter. Each bollard shall contain an infrared sender and receiver located near the base of the bollard.

There shall be an internally lit “courtesy” LED light diffuser housed in cast aluminum, white epoxy coated frame located in the upper section of the bollard. The cylinder head shall be manufactured from cast aluminum, white epoxy coated. The cylinder body shall be manufactured from extruded aluminum, white epoxy coated. There shall be an aluminum frame grill covering the central section of the bollard cylinder.

The infrared light beams within the bollards shall have a 60- foot wide sensing capacity between bollard pairs. To facilitate field adjustments, the infrared light beams are preset at the factory. Each bollard shall contain connectors capable of holding a light beam field adjustment buzzer.

b. Push Buttons – Active Push to Walk Buttons:

System shall also be capable of utilizing standard pedestrian operated push button to activate the system. For these installations, a pole mounted control box containing the push button and a row of four flashing amber LEDs would be placed near the entrance to the crosswalk. The LEDs indicate to the pedestrian that the warning system is active. This standard pedestrian activation push button device would be installed as recommended in the MUTCD. Push Button activation assembly shall include Amber LED lights.

General Performance Specifications

Assembly Size:	Height: 12 inches, Width: 5.25 inches
Assembly Color:	Green
Faceplate Size:	Height: 7.75 inches, Width: 5 inches
Faceplate Color:	Yellow Background w/ Black Lettering
Material:	Cast Aluminum
Faceplate Lights:	Amber, Light Emitting Diodes (LED)
Push Button:	ADA Compliant, 2 inch SS Mushroom w/shield & microswitch
Mounting:	Pole mounted per local height requirements

10) Manufacturer's System Assurance

Upon request, the manufacturer shall provide (Name of Agency) with a minimum of three test / evaluation study reports on the manufacturer's product conducted by independent agencies. Test/ evaluation study reports shall demonstrate the worthiness and effectiveness of manufacturer's system for assurance by (Name of Agency).

Smart Crosswalk™ Automatic Activation Bollards

Automatic Activation Series — Bollards

LightGuard Systems Part Number: LGS-T3A

Description: Automatic Pedestrian Detection Bollards

Features/Benefits:

- Aesthetically pleasing
- Optional audible sounds
- Easily installed on sidewalk
- Simple control panel installations
- 12 VDC operation (down to 9 VDC)
- Internally illuminated courtesy light
- Directional detecting infrared sensors

Application Notes:

Infrared sensors are housed inside the Bollards and are typically preset by our factory. However, adjustments to the alignment of the sensor modules may be changed in the field. The infrared light beams are projected to the respective receiver module. The Bollard system is directionally sensitive and is activated only when a pedestrian enters into the crosswalk zone *not* when exiting.

A pair of Bollards are placed at each end of the crosswalk, usually four bollards per crosswalk. When pedestrians enter into a crosswalk zone they pass between the Bollards and the Smart Crosswalk™ system is automatically activated. Each Bollard has a 24/7 LED courtesy light making the Bollard visible at night or during inclement weather.

In order to capture the most pedestrians crossing the street, it is recommended that the bollards be placed a few feet wider than the crosswalk.

General Performance Specifications

Parameter	Value
Maximum separation	60 Feet
Power consumption	2.5 Watts
Operating temperature	-20° to 80°C
Operating voltage	9 VDC to 15 VDC
Color	White (custom colors available)
Courtesy light color	Amber
Size	42″ Tall, 8″ Diameter

© 2016 LightGuard Systems®, Inc. All Rights Reserved.
2292 Airport Blvd., Santa Rosa, CA 95403 | Phone (707) 542-4547 | Fax (707) 525-6333

Bollard Installation Guidelines

INSTALLATION STEPS

Step 1 Prior to installing Bollards, the proposed site should be inspected several times to observe the everyday habits of local citizens who utilize the crosswalk. Particular attention should be paid to how far back pedestrians may "*cut the corner"* when entering the crosswalk. Bollards, as positioned, may not detect every pedestrian using the crosswalk. For example, a 12 ft. (3.6m) wide crosswalk (dimension from outside crosswalk stripe to outside crosswalk stripe), Bollards would be positioned approximately 5 to 6 ft. (1.5m to 1.8m) outside of the outer edge of the crosswalk stripe and about 18" to 24" (46cm to 61cm) behind the face of curb. Once Bollard locations have been determined, wiring, or conduit, may be run prior to installation of the hold down bolts.

Step 2 The preferred method of securing Bollards into position is to remove an 8" (20cm) square section of sidewalk then dig approximately 18" (46cm) and set anchor bolts in #6 sack concrete mix Other methods are acceptable, such as drilled anchor bolts, however, the bolts may become loose as a result of the Bollard being bumped. A loose Bollard will cause the calibrated internal sensors to become misaligned (J-Bolt alignment template is provided). Snap a "chalk line" between Bollard pair locations to ensure that j-bolt templates are *directly facing each other* (not skewed);
- *FRONT FACING*.

Step 3 After Bollard anchor bolts have been set, and the concrete has cured, the Bollards can be secured to the anchor bolts. Position the base of the Bollard approximately 1/8" to ¼" (3mm to 6mm) above the finished sidewalk grade, level, and secure. All hardware MUST be tightly secured. If installed on a sloping sidewalk, ensure that Bollard is vertical using leveling nuts.

Step 4 Run wires and make final wiring connections to each Bollard. Make wiring connections to terminal blocks in enclosure. Once wiring connections have been completed the Bollard light sensors are ready to be aligned.

BOLLARD MOUNTING DETAIL

NOTE: To alleviate wire access or electrical connection difficulties, conduit height should not exceed 1" above grade unless required by local regulations.

Mounting Diagram

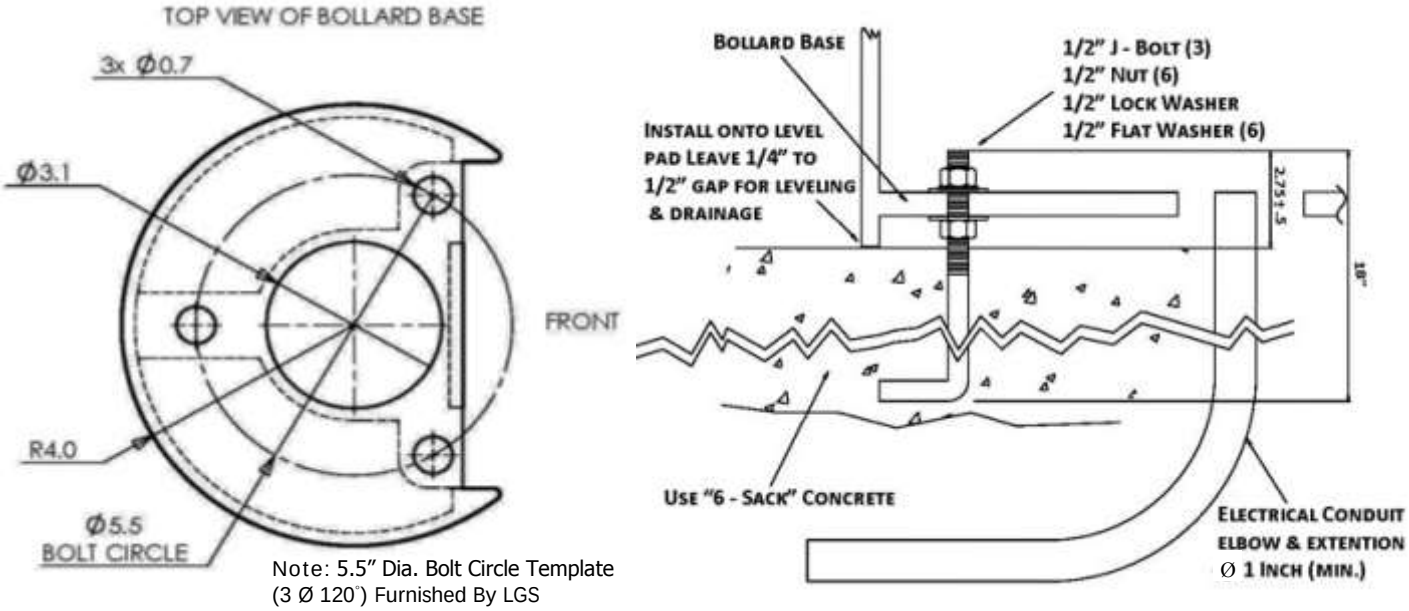

Note: 5.5" Dia. Bolt Circle Template (3 Ø 120°) Furnished By LGS

© 2016 LightGuard Systems®, Inc. All Rights Reserved.
2292 Airport Blvd., Santa Rosa, CA 95403 | Phone (707) 542-4547 | Fax (707) 525-6333