APPENDIX B

DHSP Traffic Impact Study

Prepared Evan Brooks Associates, Inc.

TRAFFIC IMPACT STUDY

DOWNTOWN HAWTHORNE SPECIFIC PLAN

HAWTHORNE, CALIFORNIA

♦♦♦♦♦♦♦♦♦♦♦♦♦♦♦♦♦♦♦

Prepared for

City of Hawthorne

4455 W. 126th Street
Hawthorne, CA 90250

♦♦♦♦♦♦♦♦♦♦♦♦♦♦♦♦♦♦♦

Prepared by

Evan Brooks Associates, Inc.

1030 Arroyo Parkway
Suite 204
Pasadena, CA 91105
Tel: 626-799-8011

Under the Supervision of:
M. Yunus Rahi, Ph.D, P.E, T.E
Registered Civil and Traffic Engineer

November 24, 2015

EBA2014-31/YR

TRAFFIC IMPACT STUDY

DOWNTOWN HAWTHORNE SPECIFIC PLAN

HAWTHORNE, CALIFORNIA

TABLE OF CONTENTS

TITLE	PAGE
Preparer's Certification	iv
Introduction	1
Report Methodology	1
Project Description	5
Existing 2015 Conditions and Levels of Service	9
Future 2020 Conditions and Levels of Service	15
Future Developments within DHSP	19
Project Impact Analysis	28
Congestion Management Program Analysis	30
Freeway Facilities Analysis	31
Cumulative 2035 Conditions and Level of Service Analysis	34
Mitigation Measures	40

TABLE OF CONTENTS (Contd.)

TABLES

NO.	TITLE	PAGE
1.	Level of Service Definitions	3
2.	Level of Service Criteria	4
3.	Existing 2015 Intersection Level of Service	14
4.	Existing 2015 Roadway Segment Level of Service	16
5.	Future 2020 Intersection Level of Service Without DHSP	18
6.	Trip Generation by Transformative Projects Within DHSP	22
7.	Future 2020 Intersection Level of Service With DHSP	27
8.	Future 2020 Intersection Level of Service With and Without DHSP	29
9.	Trip Generation by Projected Developments in Remaining DHSP Area	36
10.	Future 2035 Intersection Level of Service With and Without DHSP	38

FIGURES

NO.	TITLE	PAGE
1.	Study Area and the Vicinity	7
2.	Aerial View of the Study Area	8
3.	Existing Intersection Lane Configuration	10
4.	Existing 2015 AM and PM Peak Hour Volumes	12
5.	Future 2020 AM and PM Peak Hour Volumes Without DHSP	17
6.	Location of Transformative Projects	20
7.	Regional Trip Distribution Percentage for DHSP Projects	24
8.	Trip Distribution from DHSP Projects	25
9.	Future 2020 AM and PM Peak Hour Volumes With DHSP	26
10.	Land Use/Zoning Within DHSP Area	35
11.	Future 2035 AM and PM Peak Hour Volumes With DHSP	37

TECHNICAL APPENDIX

TRAFFIC IMPACT STUDY

DOWNTOWN HAWTHORNE SPECIFIC PLAN

HAWTHORNE, CALIFORNIA

Preparer's Certification:

This is to certify that the above titled traffic study has been prepared under the supervision of M. Yunus Rahi, Ph.D, P.E, T.E, a Professional Civil and Traffic Engineer, registered in the State of California.

	11-24-2015	
M. Yunus Rahi, Ph.D, P.E, T.E Registration #: C-59183, TR-1726	Date	Professional Engineer's Stamp

TRAFFIC IMPACT STUDY

DOWNTOWN HAWTHORNE SPECIFIC PLAN

HAWTHORNE, CALIFORNIA

Introduction:

The purpose of this traffic impact analysis is to evaluate the impacts on traffic circulation system due to the proposed development of Downtown Specific Plan area of the City of Hawthorne. The project site is located in the central heart of the City of Hawthorne, and encompasses an area bounded by the Century Freeway (I-105) on the north, Inglewood Avenue and Ramona Avenue on the west, Rosecrans Avenue on the south, and Prairie Avenue and Freeman Avenue on the east.

The proposed Hawthorne Downtown Specific Plan project has been planned to provide sufficient housing, retail, commercial, entertainment, dining, and recreational uses to help eliminate existing physical, economic, and social blight in the Downtown District of the City of Hawthorne, California.

The following are the key objectives of the study:

- Documentation of existing 2015 traffic conditions in the vicinity of the project
- Determination of Project Opening Year (2020) traffic conditions and level of service (LOS) without and with the project
- Determination of Project Build-out Year (2035) traffic conditions and level of service (LOS)
- Determination of project related impacts to the circulation system, and
- Identification of mitigation measures to reduce any significant impacts to a level of insignificance.

The report provides data regarding existing operational characteristics of traffic in the general vicinity of the project, as well as an analysis of the proposed project's impacts to these existing and anticipated future traffic conditions. The report identifies and quantifies the impacts at key intersections and recommends the most appropriate and reasonable mitigation strategies at any impacted intersections which are identified to be operating at a deficient level of service. This report investigates existing 2015 and anticipated future 2020 opening year traffic operating conditions. In addition, the anticipated future 2035 build-out traffic conditions without and with project have been analyzed and mitigation measures identified.

Report Methodology:

This report approaches the task of identifying and quantifying the anticipated impacts to

the circulation system with a structured, “building block” methodology. The first step is to inventory and quantify existing conditions. Upon this foundation of fact, a travel forecast model is structured for the entire project area and calibrated to produce reliable output, verifiable with the existing data. With the project traffic calculated and distributed onto the study area, at the anticipated opening year of the project in 2020, the travel forecast model is utilized to assess the project traffic impacts at that time. The model utilizes a growth factor for traffic based upon regional guidelines, as well as the traffic anticipated to be introduced from the proposed project to produce the travel forecast and level-of-service data for the future target year.

The trip generation estimate for development projects is based on the 9th edition of Institute of Transportation Engineers (ITE)’s “Trip Generation” handbook. Research and interviews have been conducted in order to identify and characterize the most probable trip distribution patterns within the study area.

Project impacts are identified for the future year 2020 and build-out year 2035 conditions. At those intersections operating deficiently (i. e, at LOS D or worse) and significantly impacted by the proposed project, a mitigation measure is to be identified and applied, and a before-and-after mitigation analysis conducted.

Level of Service Criteria

Roadway operations and the relationship between capacity and traffic volumes are generally expressed in terms of levels of service (LOS). Levels of service are defined as LOS A through F. These levels recognize that, while an absolute limit exists as to the amount of traffic traveling through a given intersection (the absolute capacity), the conditions that motorists experience rapidly deteriorate as traffic approaches the absolute capacity. Under such conditions, congestion is experienced. There is generally instability in the traffic flow, which means that relatively small incidents (e.g., momentary engine stall) can cause considerable fluctuations in speeds and delays. This near-capacity situation is labeled LOS E. Beyond LOS E, capacity is exceeded, and arriving traffic will exceed the ability of the intersection to accommodate it. An upstream queue will form and continue to expand in length until the demand volume reduces.

A complete description of the meaning of level of service can be found in the Highway Research Board’s Special Report 209: Highway Capacity Manual which establishes the definitions for levels of service A through F. Brief descriptions of the six levels of service, as extracted from the manual, are listed in **Table 1**.

TABLE 1: LEVEL OF SERVICE DEFINITIONS

LOS	Description
A	No approach phase is fully utilized by traffic and no vehicle waits longer than one red indication. Typically, the approach appears quite open, turns are made easily and nearly all drivers find freedom of operation.
B	This service level represents stable operation, where an occasional approach phase is fully utilized and a substantial number are approaching full use. Many drivers begin to feel restricted within platoons of vehicles.
C	This level still represents stable operating conditions. Occasionally, drivers have to wait through more than one red signal indication, and backups may develop behind turning vehicles. Most drivers feel somewhat restricted.
D	This level encompasses a zone of increasing restriction approaching instability at the intersection. Delays to approaching vehicles may be substantial during short peaks within the peak period; however, enough cycles with lower demand occur to permit periodic clearance of developing queues, thus preventing excessive backups.
E	Capacity occurs at the upper end of this service level. It represents the most vehicles that any particular intersection can accommodate. Full utilization of every signal cycle is seldom attained no matter how great the demand.
F	This level describes forced flow operations at low speeds, where volumes exceed capacity. These conditions usually result from queues of vehicles backing up from restriction downstream. Speeds are reduced substantially and stoppages may occur for short or long periods of time due to congestion. In the extreme case, both speed and volume can drop to zero.

The thresholds of level of service for unsignalized and signalized intersections are shown in **Table 2**, as follows:

TABLE 2: LEVEL OF SERVICE CRITERIA

Level of Service	Two-Way or All-Way Stop Controlled Intersection Average Delay per Vehicle (sec)	Signalized Intersection Average Delay per Vehicle (sec)	Volume to Capacity (V/C) Ratio
A	0 - 10	< or = 10	0 – 0.60
B	> 10 - 15	> 10 - 20	> 0.60 – 0.70
C	> 15 - 25	> 20 - 35	> 0.70 - 0.80
D	> 25 - 35	> 35 - 55	> 0.80 – 0.90
E	> 35 - 50	> 55 - 80	> 0.90 – 1.00
F	> 50	> 80 or a V/C ratio greater than 1.0	> 1.00

LOS D is the minimum threshold at all key intersections in the urbanized areas. The traffic study guidelines require that traffic mitigation measures be identified to provide for operations at the minimum threshold levels.

For the study area intersections, the Intersection Capacity Utilization (ICU) procedure has been utilized to determine intersection levels of service. Levels of service are presented for the entire intersection, consistent with the local and regional agency policies.

While the level of service concept and analysis methodology provides an indication of the performance of the entire intersection, the single letter grade A through F cannot describe specific operational deficiencies at intersections. Progression, queue formation, and left-turn storage are examples of the operational issues that affect the performance of an intersection, but do not factor into the strict calculation of level of service. However, it provides a volume to capacity (V/C) ratio that is more meaningful when identifying a project's impact and developing mitigation measures. Therefore, this V/C ratio information is included in describing an intersection's operational performance under various scenarios.

Project Description:

The Downtown Hawthorne Specific Plan (DHSP) area totals approximately 794 acres or 1.24 square miles. The area boundaries include the I-105 on the north, Freeman Avenue and Prairie Avenue on the east, the city limits with the City of Lawndale on the south and Ramona Avenue and Inglewood Avenue on the west. In addition to the major north-south arterial Hawthorne Boulevard, the project area includes the east-west portions of Imperial Highway, 120th Street, El Segundo Boulevard and Rosecrans Avenue. The light rail Metro Green Line runs east-west in the median of I-105 with the Metro Hawthorne/Lennox Station located at Hawthorne Boulevard at the northern end of the project area. A Union Pacific rail line bisects the DHSP area at Hawthorne Boulevard between 120th Street and El Segundo Boulevard.

The primary land uses in the DHSP area include residential, commercial and public facilities. Residential uses, both single and multiple-family units, are generally located behind the commercial uses that are along Hawthorne Boulevard and Imperial Highway. The existing residential uses represent more than one-half of the total DHSP area. Single-family residential uses total 186.8 acres (23.5% of the total DHSP area) and multi-family residential uses total 203.9 acres (25.7% of the total). Commercial office, retail and services and associated parking total 135.9 acres (17.1% of the total). The remaining developed land uses include public facilities at 24.7 acres (3.1%), transportation, communication and utilities at 4.3 acres (0.5%) and industrial at 3.9 acres (0.5%). Although the DHSP area is highly urbanized, 77 parcels have been identified as vacant and total 25.7 acres or 3.2 percent of the DHSP area.

Figure 1 shows the study area and the vicinity.

Figure 2 shows an aerial view of the study area.

Existing Conditions and Levels of Service:

The following 22 intersections have been identified as key intersections located within the project area and the vicinity:

1. Prairie Av / 120th St
2. Hawthorne Bl / 120th St
3. Inglewood Av / 120th St
4. Hawthorne Bl / Lennox Bl
5. Hawthorne Bl / Marine Av
6. Hawthorne Bl / 139th St
7. Hawthorne Bl / Imperial Hwy
8. Hawthorne Bl / Broadway
9. Hawthorne Bl / El Segundo Bl
10. Hawthorne Bl / Rosecrans Av
11. Inglewood Av / Imperial Hwy
12. Inglewood Av / El Segundo Bl
13. Inglewood Av / Rosecrans Av
14. Prairie Av / El Segundo Bl

15. Prairie Av / Imperial Hwy
16. Prairie Av / I-105 EB Off-ramp
17. Imperial Hwy / I-105 EB On-ramp
18. Hawthorne Bl / I-105 WB Off-ramp
19. El Segundo Bl / I-405 NB On-off-ramp
20. El Segundo Bl / I-405 SB On-off-ramp
21. Birch Av / El Segundo Bl
22. Birch Av / 120th St

The project's existing conditions (as well as future conditions) analysis includes data collection including existing intersection traffic volumes, traffic controls and lane geometrics, parking and pedestrian facilities, a review of existing land uses, and determination of existing levels of service (LOS) at these intersections.

FIGURE 1: STUDY AREA AND THE VICINITY

FIGURE 2: AERIAL VIEW OF STUDY AREA

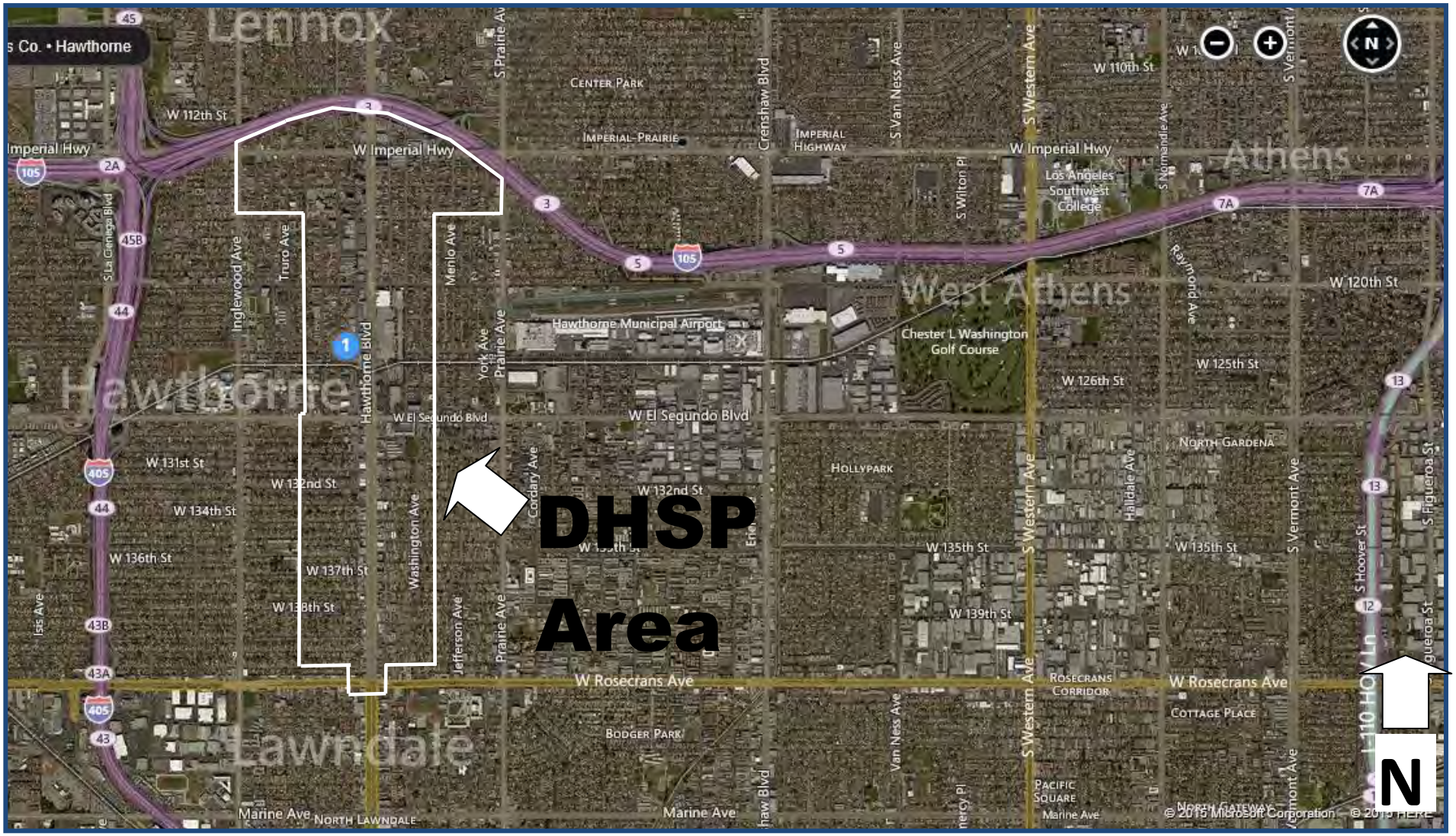

Traffic count data for these intersections were conducted in the month of February, 2015 during weekday AM and PM peak periods as well as during a Saturday peak period.

Six major roadways provide regional access to the study area. Three major roadways – Inglewood Avenue, Hawthorne Boulevard and Prairie Avenue provide north-south access, and three other major roadways – Imperial Highway, 120th Street, El Segundo Boulevard provide east-west access. Traffic counts were conducted using automatic traffic counters on six mid-block segments of major roadways in the month of February, 2015. Roadway segment level of service (LOS) analysis was conducted using these traffic count data, roadway characteristics, lane geometry and roadway capacity for the following four roadway segments:

1. 120th St between Prairie Ave and Doty Ave
2. 120th St between Inglewood Ave and Hawthorne Bl
3. Hawthorne Bl between El Segundo Bl and 135th St
4. Imperial Hwy between Inglewood Ave and Hawthorne Bl
5. El Segundo Bl between Inglewood Ave and Hawthorne Bl
6. El Segundo Bl between Prairie Ave and Yukon Ave

Existing intersection lane configurations are shown on **Figure 3**.

Existing turning movement volumes for AM and PM peak hour conditions are shown on **Figure 4.** Detailed turning movement counts as well as 24-hour daily traffic counts data are included in the Technical Appendix of this report.

Existing 2015 Conditions and Levels of Service:

Year 2015 existing traffic conditions were evaluated using the Intersection Capacity Utilization (ICU) procedure of level of service (LOS) analysis.

Table 3 presents the existing condition intersection level of service (LOS) analysis summary. Detailed calculations relating to the study intersections are included in the Technical Appendix of this report.

The results indicate that 18 of the 22 study intersections are currently operating at an acceptable level of service (i.e., LOS D or better). The remaining 4 intersections are operating at an unacceptable LOS E during either AM or PM or both peak hours. These intersections are:

- Prairie Av and 120th St
- Inglewood Av and El Segundo Bl
- Inglewood Av and Rosecrans Av
- Prairie Av and Imperial Hwy

FIGURE 3: EXISTING INTERSECTION LANE CONFIGURATION

Study Intersections:			
1. Prairie Av / 120th St	7. Hawthorne Bl / Imperial Hwy	13. Inglewood Av / Rosecrans Av	19. El Segundo Av / I-405 NB on-off-ramp
2. Hawthorne Bl / 120th St	8. Hawthorne Bl / Broadway	14. Prairie Av / El Segundo Bl	20. El Segundo Av / I-405 SB on-off-ramp
3. Inglewood Av / 120th St	9. Hawthorne Bl / El Segundo Bl	15. Prairie Av / Imperial Hwy	21. Birch Av / El Segundo Bl
4. Hawthorne Bl / Lennox Bl	10. Hawthorne Bl / Rosecrans Av	16. Prairie Av / I-105 EB off-ramp	22. Birch Av / 120th St
5. Hawthorne Bl / Marine Av	11. Inglewood Av / Imperial Hwy	17. Imperial Hwy / I-105 EB on-ramp	
6. Hawthorne Bl / 139th St	12. Inglewood Av / El Segundo Bl	18. Hawthorne Bl / I-105 WB off-ramp	

FIGURE 3: EXISTING INTERSECTION LANE CONFIGURATION (Contd..)

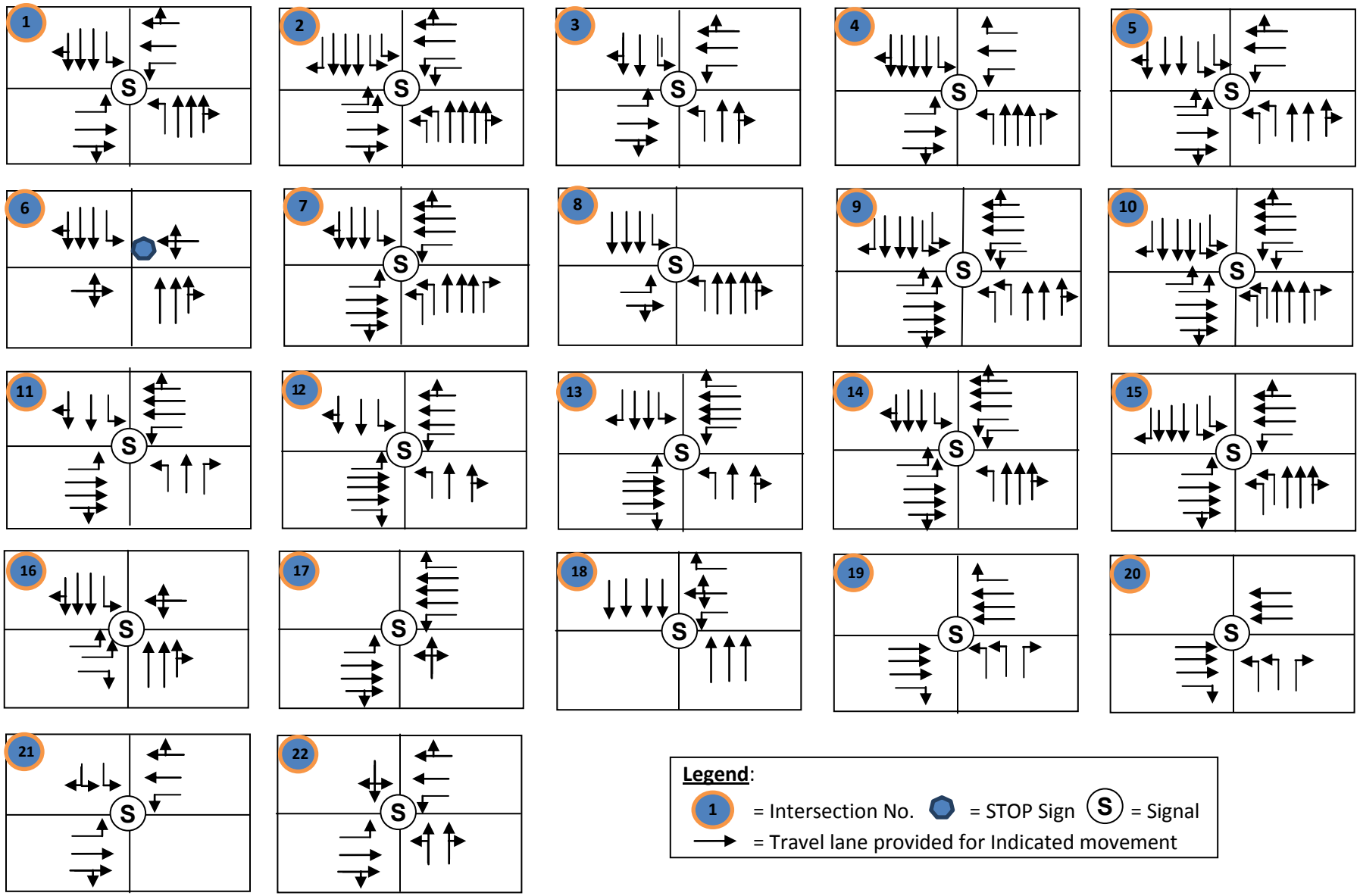

FIGURE 4: EXISTING AM AND PM PEAK HOUR VOLUME AT STUDY INTERSECTIONS

Study Intersections:			
1. Prairie Av / 120th St	7. Hawthorne Bl / Imperial Hwy	13. Inglewood Av / Rosecrans Av	19. El Segundo Av / I-405 NB on-off-ramp
2. Hawthorne Bl / 120th St	8. Hawthorne Bl / Broadway	14. Prairie Av / El Segundo Bl	20. El Segundo Av / I-405 SB on-off-ramp
3. Inglewood Av / 120th St	9. Hawthorne Bl / El Segundo Bl	15. Prairie Av / Imperial Hwy	21. Birch Av / El Segundo Bl
4. Hawthorne Bl / Lennox Bl	10. Hawthorne Bl / Rosecrans Av	16. Prairie Av / I-105 EB off-ramp	22. Birch Av / 120th St
5. Hawthorne Bl / Marine Av	11. Inglewood Av / Imperial Hwy	17. Imperial Hwy / I-105 EB on-ramp	
6. Hawthorne Bl / 139th St	12. Inglewood Av / El Segundo Bl	18. Hawthorne Bl / I-105 WB off-ramp	

FIGURE 4: EXISTING AM AND PM PEAK HOUR VOLUME AT STUDY INTERSECTIONS (Contd..)

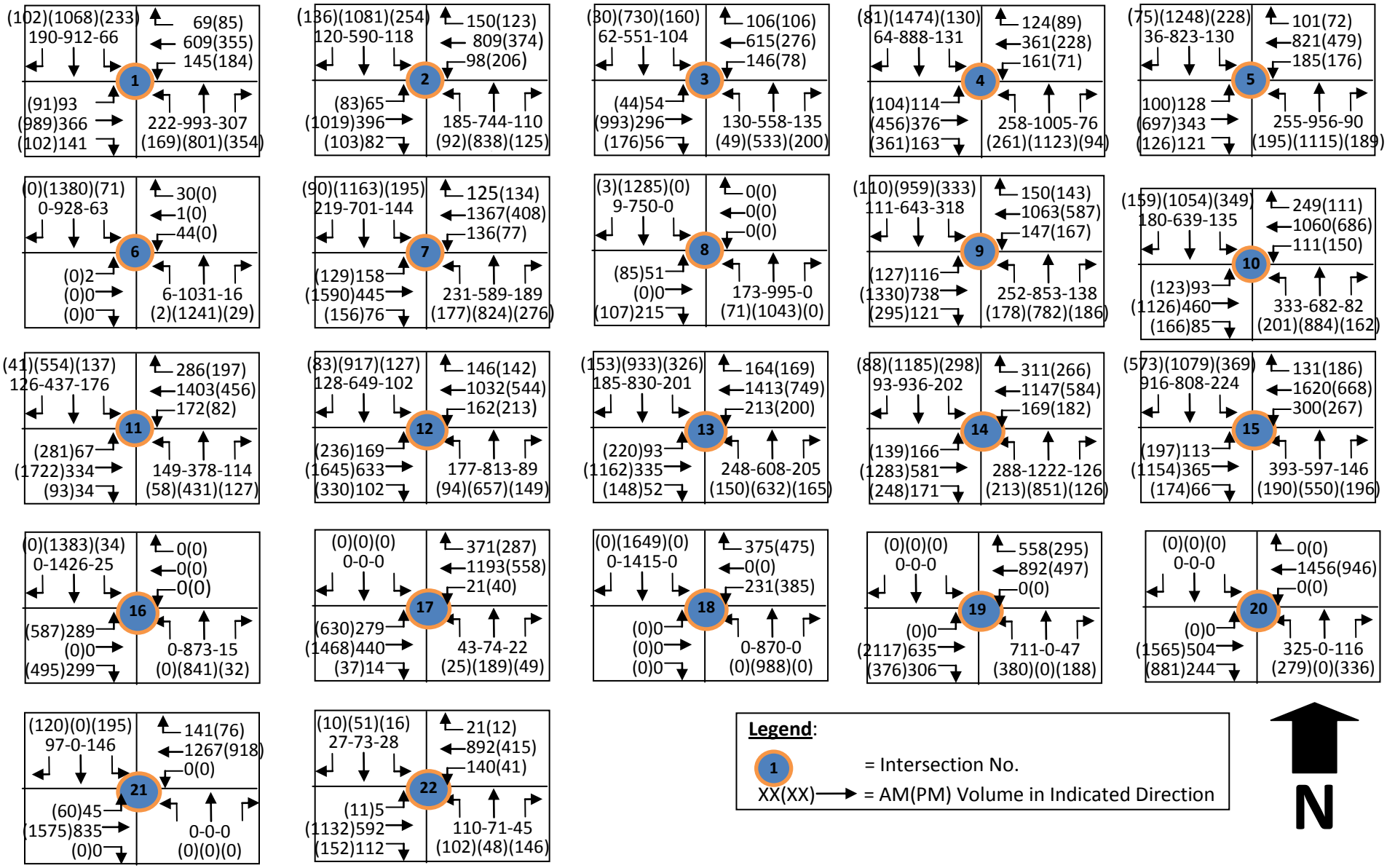

TABLE 3: EXISTING 2015 INTERSECTION LEVEL OF SERVICE

INTERSECTION	PEAK HOUR	EXISTING 2015 TRAFFIC CONDITIONS	
		V/C	LOS
1. Prairie Av and 120th St	AM	0.738	C
	PM	0.942	E
2. Hawthorne Bl and 120th St	AM	0.609	B
	PM	0.779	C
3. Inglewood Av and 120th St	AM	0.641	B
	PM	0.843	D
4. Hawthorne Bl and Lennox Bl	AM	0.707	C
	PM	0.806	D
5. Hawthorne Bl and Marine Av	AM	0.700	B
	PM	0.818	D
6. Hawthorne Bl and 139th St	AM	0.406	A
	PM	0.410	A
7. Hawthorne Bl and Imperial Hwy	AM	0.781	C
	PM	0.834	D
8. Hawthorne Bl and Broadway	AM	0.501	A
	PM	0.480	A
9. Hawthorne Bl and El Segundo Bl	AM	0.710	C
	PM	0.814	D
10. Hawthorne Bl and Rosecrans Av	AM	0.654	B
	PM	0.727	C
11. Inglewood Av and Imperial Hwy	AM	0.840	D
	PM	0.884	D
12. Inglewood Av and El Segundo Bl	AM	0.804	C
	PM	0.947	E
13. Inglewood Av and Rosecrans Av	AM	0.867	D
	PM	0.920	E
14. Prairie Av and El Segundo Bl	AM	0.868	D
	PM	0.880	D
15. Prairie Av and Imperial Hwy	AM	1.174	F
	PM	0.845	D
16. Prairie Av and I-105 EB Off-ramp	AM	0.584	A
	PM	0.698	B
17. Imperial Hwy and I-105 EB On-ramp	AM	0.610	B
	PM	0.838	D
18. Hawthorne Bl and I-105 WB Off-ramp	AM	0.465	A
	PM	0.598	A
19. El Segundo Bl and I-405 NB On-off-ramp	AM	0.696	B
	PM	0.673	B
20. El Segundo Bl and I-405 SB On-off-ramp	AM	0.516	A
	PM	0.773	C
21. Birch Av and El Segundo Bl	AM	0.513	A
	PM	0.714	C
22. Birch Av and 120th St	AM	0.488	A
	AM	0.619	B

Table 4 presents a summary of existing level of service (LOS) for roadway segments.

The results indicate that the 6 roadway segments analyzed are operating at an acceptable LOS (A through D) during peak hours and also on a weekday 24-hour basis.

Future 2020 Conditions and Level of Service:

The year 2020 traffic conditions were analyzed with and without the DHSP projects to determine the potential traffic impacts of DHSP on traffic circulation system in the future. The year 2015 existing traffic volumes were updated by multiplying with a traffic growth factor to develop the estimated 2020 traffic volumes without the 5 transformative projects. The Los Angeles County Metropolitan Transportation Authority (LACMTA) provides traffic growth factors for various areas within the Los Angeles County in its Congestion Management Program (CMP) publications. The 2010 CMP provides traffic growth factors for Hawthorne area (i.e., South Bay/LAX region) as 1.013 between 2010 and 2015, 1.026 between 2010 and 2020, and 1.053 between 2010 and 2035. Using these factors, the traffic growth in Hawthorne is estimated to be 0.26% per year for the years between 2015 and 2020.

The future 2020 traffic volumes with ambient traffic growth at the study intersections are shown in **Figure 5**.

Level of service analysis was conducted for the 22 key intersections with projected future traffic volumes without DHSP transformative projects. The results are shown in **Table 5**.

The results indicate that 18 of the 22 study intersections are currently operating at an acceptable level of service (i.e., LOS D or better). The remaining 4 intersections are operating at an unacceptable LOS E during either AM or PM or both peak hours. These intersections are:

- Prairie Av and 120th St
- Inglewood Av and El Segundo Bl
- Inglewood Av and Rosecrans Av
- Prairie Av and Imperial Hwy

TABLE 4: EXISTING 2015 ROADWAY SEGMENT LEVEL OF SERVICE

Roadway Type	Dir.	No. of Lanes	AM Peak Hour				PM Peak Hour				Average Daily Traffic	Weekday Both Direction			
			Vol	Cap	V/C	LOS	Vol	Cap	V/C	LOS		Vol	Cap	V/C	LOS
120th St between Prairie Ave and Doty Ave															
Major Arterial	EB	2	701	1,600	0.44	A	1,324	1,600	0.83	D	13,561	32,879	60,000	0.55	A
	WB	2	693	1,600	0.43	A	574	1,600	0.36	A	7,947				
120th St between Inglewood Ave and Hawthorne Bl															
Major Arterial	EB	2	682	1,600	0.43	A	1,368	1,600	0.86	D	11,669	19,541	40,000	0.49	A
	WB	2	841	1,600	0.53	A	485	1,600	0.30	A	7,872				
Hawthorne Bl between El Segundo Bl and 135th St															
Major Arterial	NB	3	1,030	2,400	0.43	A	1,373	2,400	0.57	A	14,518	29,519	60,000	0.49	A
	SB	3	878	2,400	0.37	A	1,386	2,400	0.58	A	15,001				
Imperial Hwy between Inglewood Ave and Hawthorne Bl															
Major Arterial	EB	3	623	2,400	0.26	A	1,373	2,400	0.57	A	14,518	29,519	60,000	0.49	A
	WB	3	1648	2,400	0.69	B	1,386	2,400	0.58	A	15,001				
El Segundo Bl between Inglewood Ave and Hawthorne Bl															
Major Arterial	EB	3	843	2,400	0.35	A	1,702	2,400	0.71	C	15,771	30,737	60,000	0.51	A
	WB	3	1413	2,400	0.59	A	829	2,400	0.35	A	14,966				
El Segundo Bl between Prairie Ave and Yukon Ave															
Major Arterial	EB	3	950	2,400	0.40	A	1,744	2,400	0.73	C	18,403	33,545	60,000	0.56	A
	WB	3	1354	2,400	0.56	A	1,023	2,400	0.43	A	15,142				

Note: Daily Capacity for Major Arterial is 60,000 veh/day (6-lane), and 40,000 veh/day (4-lane)
Daily Capacity for 4-lane Secondary Arterial is 40,000 veh/day
Peak hour Capacity for Major Arterial is 800 veh/hour per lane
Peak hour Capacity for Secondary Arterial is 700 veh/hour per lane

FIGURE 5: FUTURE 2020 AM AND PM PEAK HOUR VOLUME AT STUDY INTERSECTIONS WITHOUT DHSP

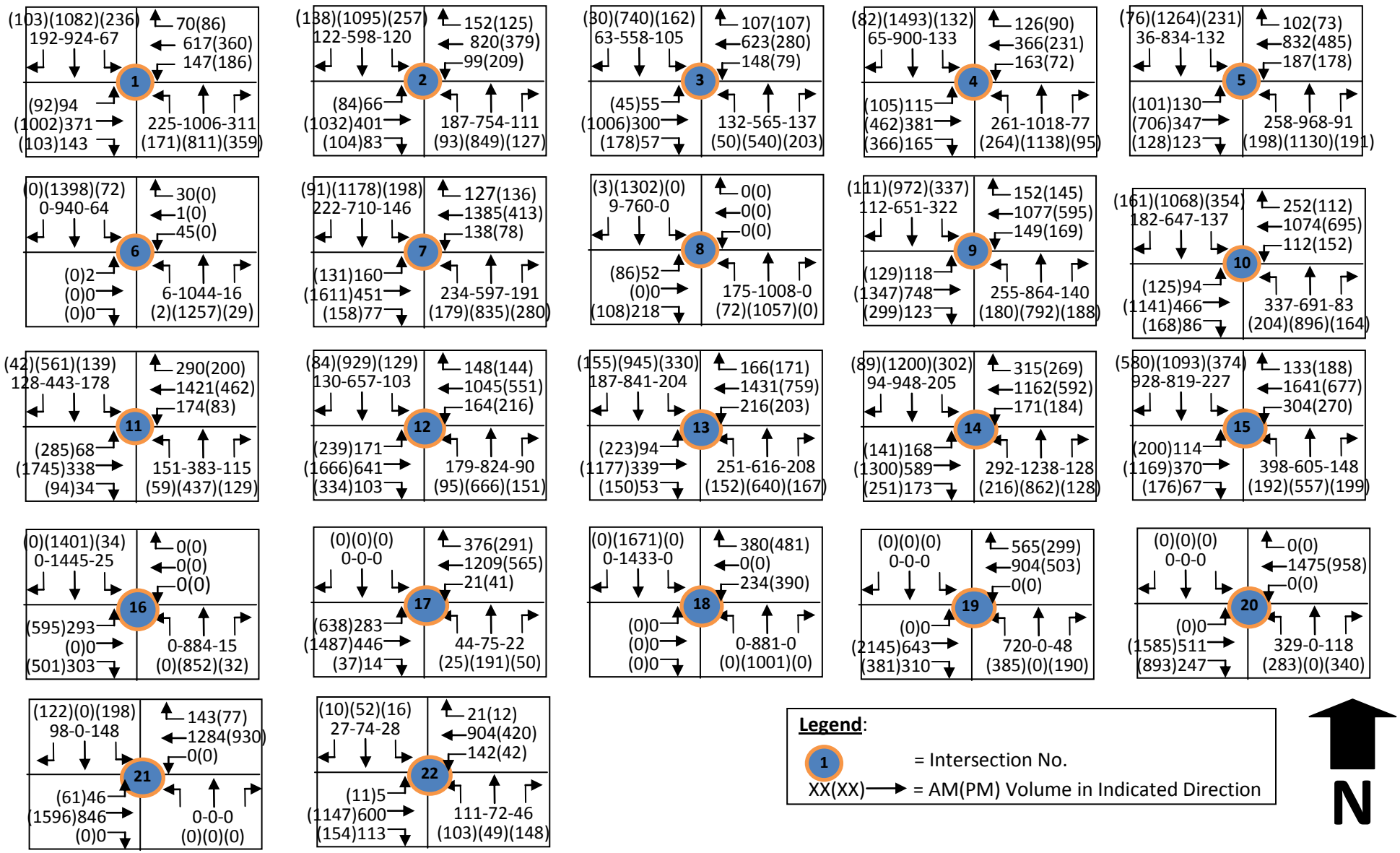

TABLE 5: FUTURE 2020 INTERSECTION LEVEL OF SERVICE WITHOUT DHSP

INTERSECTION	PEAK HOUR	FUTURE 2020 CONDITIONS WITHOUT DHSP	
		V/C	LOS
1. Prairie Av and 120th St	AM	0.747	C
	PM	0.953	E
2. Hawthorne Bl and 120th St	AM	0.610	B
	PM	0.788	C
3. Inglewood Av and 120th St	AM	0.648	B
	PM	0.853	D
4. Hawthorne Bl and Lennox Bl	AM	0.715	C
	PM	0.815	D
5. Hawthorne Bl and Marine Av	AM	0.708	C
	PM	0.827	D
6. Hawthorne Bl and 139th St	AM	0.410	A
	PM	0.414	A
7. Hawthorne Bl and Imperial Hwy	AM	0.790	C
	PM	0.844	D
8. Hawthorne Bl and Broadway	AM	0.506	A
	PM	0.485	A
9. Hawthorne Bl and El Segundo Bl	AM	0.718	C
	PM	0.823	D
10. Hawthorne Bl and Rosecrans Av	AM	0.661	B
	PM	0.735	C
11. Inglewood Av and Imperial Hwy	AM	0.850	D
	PM	0.895	D
12. Inglewood Av and El Segundo Bl	AM	0.814	C
	PM	0.958	E
13. Inglewood Av and Rosecrans Av	AM	0.877	D
	PM	0.931	E
14. Prairie Av and El Segundo Bl	AM	0.879	D
	PM	0.891	D
15. Prairie Av and Imperial Hwy	AM	1.188	F
	PM	0.854	D
16. Prairie Av and I-105 EB Off-ramp	AM	0.590	A
	PM	0.705	C
17. Imperial Hwy and I-105 EB On-ramp	AM	0.616	B
	PM	0.847	D
18. Hawthorne Bl and I-105 WB Off-ramp	AM	0.470	A
	PM	0.605	B
19. El Segundo Bl and I-405 NB On-off-ramp	AM	0.703	B
	PM	0.680	B
20. El Segundo Bl and I-405 SB On-off-ramp	AM	0.522	A
	PM	0.782	C
21. Birch Av and El Segundo Bl	AM	0.518	A
	PM	0.722	C
22. Birch Av and 120th St	AM	0.493	A
	PM	0.626	B

Future Developments within DHSP:

A total of 4 Transformative Projects have been identified in the DHSP that will serve as opportunity sites for new and catalytic development and investment. The locations of the four Transformative Projects are illustrated in **Figure 6**. The DHSP presents a development concept for each site, which is summarized below:

T1 Hawthorne Mall

This area represents the anchor of the revitalization of the DHSP area. It fronts Hawthorne Boulevard and encompasses approximately 26 acres. The main portion of the Hawthorne Mall Transformative Project includes a large vacant building and parking structure. The proposed development for this site will be a mixed-use project consisting of 173,000 SF for Retail use, 685,000 SF of Retail Flex Space (of which 230,000 SF is retail use and 455,000 SF is Research and Development production studio use), 180,000 SF of Office use (50% governmental office use and 50% general commercial office use), and 608 units of Residential uses (304 units will be for seniors and 304 units will be for market rate). The existing 252,000 SF parking structure will remain and 180,000 SF office will be constructed on top of the existing parking. The existing structure north of the rail line will be demolished.

T2 Civic Center

The Civic Center Transformative Project encompasses approximately 14 acres and is the location of Hawthorne City Hall and municipal buildings, including the City's former Police Department headquarters. The DHSP land use strategy is to unite a disparate set of civic buildings into a cohesive and inviting civic center, with a central city square or plaza and a mixed-use of higher-density residential, retail, office and hospitality uses. The net development potential for the site is 377,000 SF of commercial uses (including a 120,000 SF 300-room hotel, 128,500 SF retail and 128,500 SF office). Existing retail use of 49,500 SF, existing office use of 58,700 SF and existing residential use of 8 units will be removed. Existing government office use of 77,000 SF will remain.

T3 South Bay Ford

The South Bay Ford Transformative Project is located in the southern portion of the DHSP area along Hawthorne Boulevard. This site is approximately four acres and is the original site of South Bay Ford auto dealership. The DHSP promotes horizontal mixed-use allowing for a larger-format commercial center and medium and higher-density residential. The development potential of the site includes 55 multi-family residential units and 19,800 square feet of on-residential uses (9,900 square feet of retail uses and 9,900 square feet of office uses).

FIGURE 6: LOCATION OF DHSP TRANSFORMATIVE PROJECTS

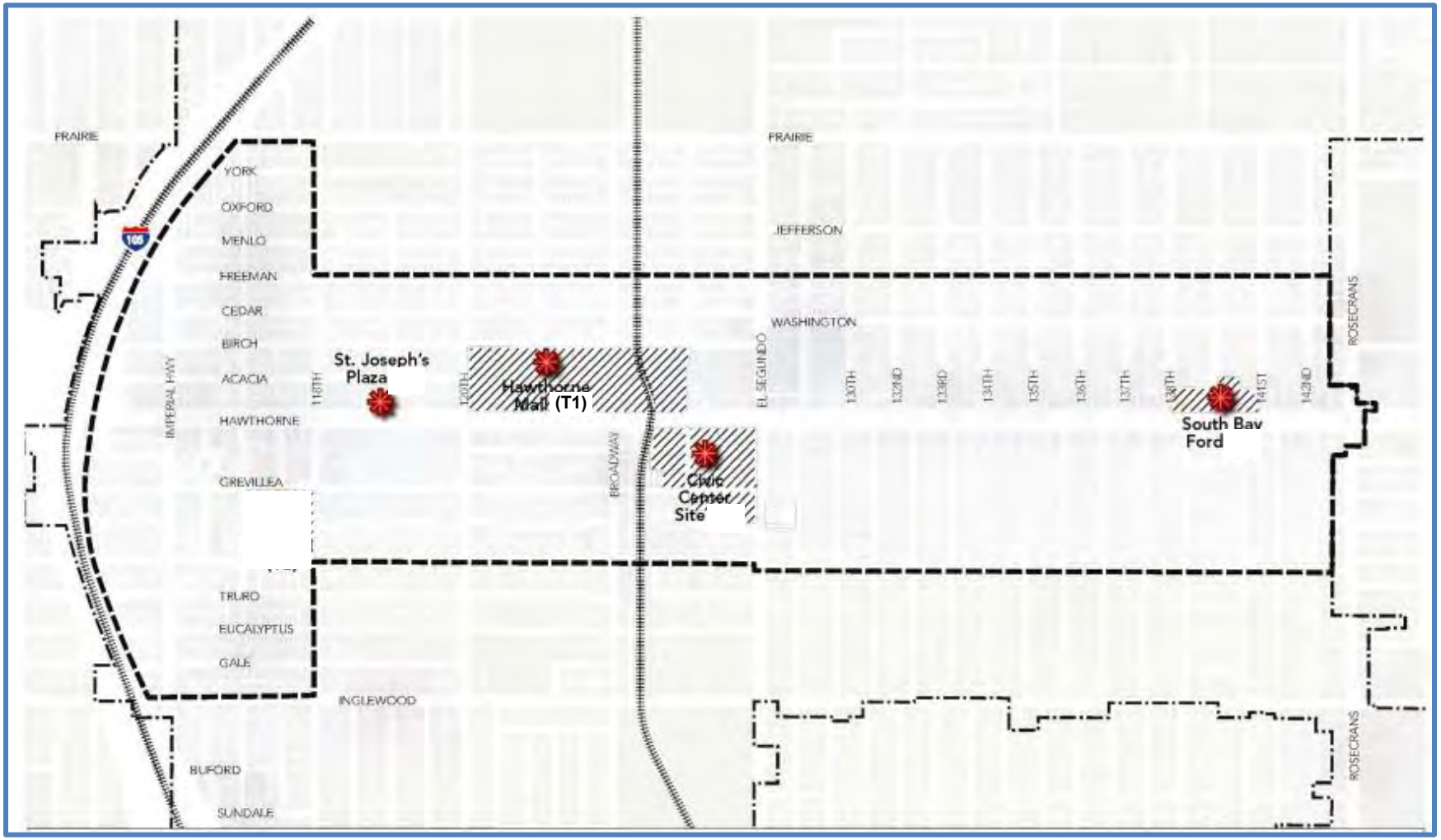

T4 St. Joseph's Plaza

The land use strategy for this one-half acre site is to develop it as a landmark public neighborhood plaza or park that serves as a community focal point and helps frame the historic St. Joseph's Church and Chips restaurant. The site is currently used for a gas station. It is assumed that the 1,800 square feet gas station will be demolished and the land converted to a public park/open spaces area.

Table 6 shows estimated trip generation from 4 Transformative Projects within DHSP area. The estimates are based on trip generation rates and guidelines provided in Institute of Transportation Engineers (ITE) publication "Trip Generation", 9th edition. It is estimated that these 4 transformative projects will generate a total of 33,466 trips per day (16,733 trips inbound and 16,733 trips outbound) of which 1,550 trips will be generated during the AM peak hour (934 inbound and 616 outbound), and 2,639 trips will be generated during the PM peak hour (1,290 inbound and 1,349 outbound).

Figure 7 shows regional trip distribution percentages of new trips from the 4 transformative projects. The distribution percentages are based on existing traffic characteristics in the region, location of residential and commercial land uses, and employment and other activity centers in the vicinity.

Figure 8 shows distributed traffic volumes from the 4 Transformative Projects at the study intersections. The Technical Appendix contains a spreadsheet showing details of calculations for projected traffic volumes at the study intersections from each of these 4 Transformative Projects.

The future 2020 cumulative traffic volumes with ambient traffic growth and traffic from DHSP projects at the study intersections are shown in **Figure 9**.

Level of service analysis was conducted for the 22 key intersections with projected future traffic volumes with DHSP transformative projects. The results are shown in **Table 7**.

The results indicate that 7 of the 22 study intersections would be operating at an unacceptable LOS E during either AM or PM or both peak hours. These intersections are:

- Prairie Av and 120th St
- Hawthorne Bl and Imperial Hwy
- Inglewood Av and Imperial Hwy
- Inglewood Av and El Segundo Bl
- Inglewood Av and Rosecrans Av
- Prairie Av and El Segundo Bl
- Prairie Av and Imperial Hwy

TABLE 6: TRIP GENERATION BY DHSP TRANSFORMATIVE PROJECTS

Building Development Potential 2020 Scenario

No.	ITE Land Use Code	Land Use	Unit	Trip Generation Rates							Amount of Unit	Estimated Trip Generation						
				Daily	AM Total	AM In	AM Out	PM Total	PM In	PM Out		Daily	AM Total	AM In	AM Out	PM Total	PM In	PM Out
Transformative Project: T1 - Hawthorne Mall																		
1	230	Residential (Condo/Townhouse)	DU	5.81	0.44	17%	83%	0.52	67%	33%	304	1,766	134	23	111	158	106	52
	252	Sen Adult Housing	DU	3.48	0.08	45%	55%	0.11	61%	39%	304	1,058	24	11	13	33	20	13
	820	Retail (Shop Center)	KSF	42.94	1.00	61%	39%	3.73	49%	51%	173.000	7,429	173	106	67	645	316	329
	820	Retail/Flex (Shopping Center)	KSF	42.94	1.00	61%	39%	3.73	49%	51%	230.000	9,876	230	140	90	858	420	438
		Less Pass-by (20%)										3,461	81	49	31	301	147	153
	760	Flex Space (R&D)	KSF	8.11	1.24	83%	17%	1.08	15%	85%	455.000	3,690	564	468	96	491	74	418
	730	Govt. Office Building	KSF	68.93	5.88	84%	16%	1.21	31%	69%	90.000	6,204	529	445	85	109	34	75
	710	General Office	KSF	11.03	1.56	88%	12%	1.49	17%	83%	90.000	994	140	124	17	134	23	111
	730	Less Exist. Government Office	KSF	68.93	5.88	84%	16%	1.21	31%	69%	-90.000	6,204	529	445	85	109	34	75
	710	Less Exist. Office	KSF	11.03	1.56	88%	12%	1.49	17%	83%	-90.000	994	140	124	17	134	23	111
	Total											20,358	1,045	699	346	1,885	789	1,096
	Less Internal Capture (20%)											4,072	209	140	69	377	158	219
	Net Total											16,286	836	559	277	1,508	631	877
Transformative Project: T2 - Civic Center																		
2	820	Retail/Shopping Ctr (128,500sf)	KSF	42.94	1.00	61%	39%	3.73	49%	51%	128.500	5,518	129	78	50	479	235	244
	820	Less Exist Retail /Shop (49,500sf)	KSF	42.94	1.00	61%	39%	3.73	49%	51%	49.500	2,126	50	30	19	185	90	94
		Less Pass-by (20%)										678	16	10	6	59	29	30
	710	Office (128,500sf)	KSF	11.03	1.56	88%	12%	1.49	17%	83%	128.500	1,417	200	176	24	191	33	159

(Continued to Next Page…)

TABLE 6: TRIP GENERATION BY DHSP TRANSFORMATIVE PROJECTS (Contd..)

Building Development Potential 2020 Scenario

No.	ITE Land Use Code	Land Use	Unit	Trip Generation Rates							Amount of Unit Daily	Estimated Trip Generation						
				Daily	AM Total	AM In	AM Out	PM Total	PM In	PM Out		AM Total	AM Total	AM In	AM Out	PM Total	PM In	PM Out
Transformative Project: T2 - Civic Center (Continued)																		
2	710	Less Exist Office (58,700 sf)	KSF	11.03	1.56	88%	12%	1.49	17%	83%	58.700	647	92	81	11	87	15	73
	310	Hotel (120,000 sf)	Rm	8.17	0.56	61%	39%	0.56	53%	47%	300	2,451	168	102	66	168	89	79
	730	Govt Ofc (77,000 sf)	KSF	68.93	5.88	84%	16%	1.21	31%	69%	77.000	5,308	453	380	72	93	29	64
	730	Less Exist Govt Ofc	KSF	68.93	5.88	84%	16%	1.21	31%	69%	77.000	5,308	453	380	72	93	29	64
	210	Less Exist S. Family	DU	9.57	0.75	25%	75%	1.01	63%	37%	8	77	6	2	5	8	5	3
	Total											5,858	334	235	99	500	217	283
	Less Internal Capture (20%)											1,172	67	47	20	100	43	57
	Net Total											4,687	267	188	79	400	174	226
Transformative Project: T3 - South Bay Ford																		
3	220	Apartment	DU	6.65	0.51	20%	80%	0.62	65%	35%	55	366	28	6	22	34	22	12
	814	Specialty Retail	KSF	44.34	6.84	48%	52%	2.71	44%	56%	9.900	439	68	33	35	27	12	15
		Less Pass-by (20%)										88	14	7	7	5	2	3
	710	Office	KSF	11.03	1.56	88%	12%	1.49	17%	83%	9.900	109	15	14	2	15	3	12
	Total											826	98	45	52	70	34	36
Transformative Project: T4 - St. Joseph's Plaza																		
4	814	Specialty Retail	KSF	44.34	6.84	48%	52%	2.71	44%	56%	-1.800	-80	-12	-6	-6	-5	-2	-3
		Less Pass-by (20%)										-16	-2	-1	-1	-1	0	-1
	411	Park/Open Space	Acre	50.00	4.50	50%	50%	6.50	50%	50%	0.457	23	2	1	1	3	1	1
	Total											-41	-8	-4	-4	-1	0	-1
TOTAL TRIP GENERATION:												21,758	1,193	789	404	1,977	839	1,138

FIGURE 7: REGIONAL TRIP DISTRIBUTION PERCENTAGES OF DHSP TRANSFORMATIVE PROJECTS

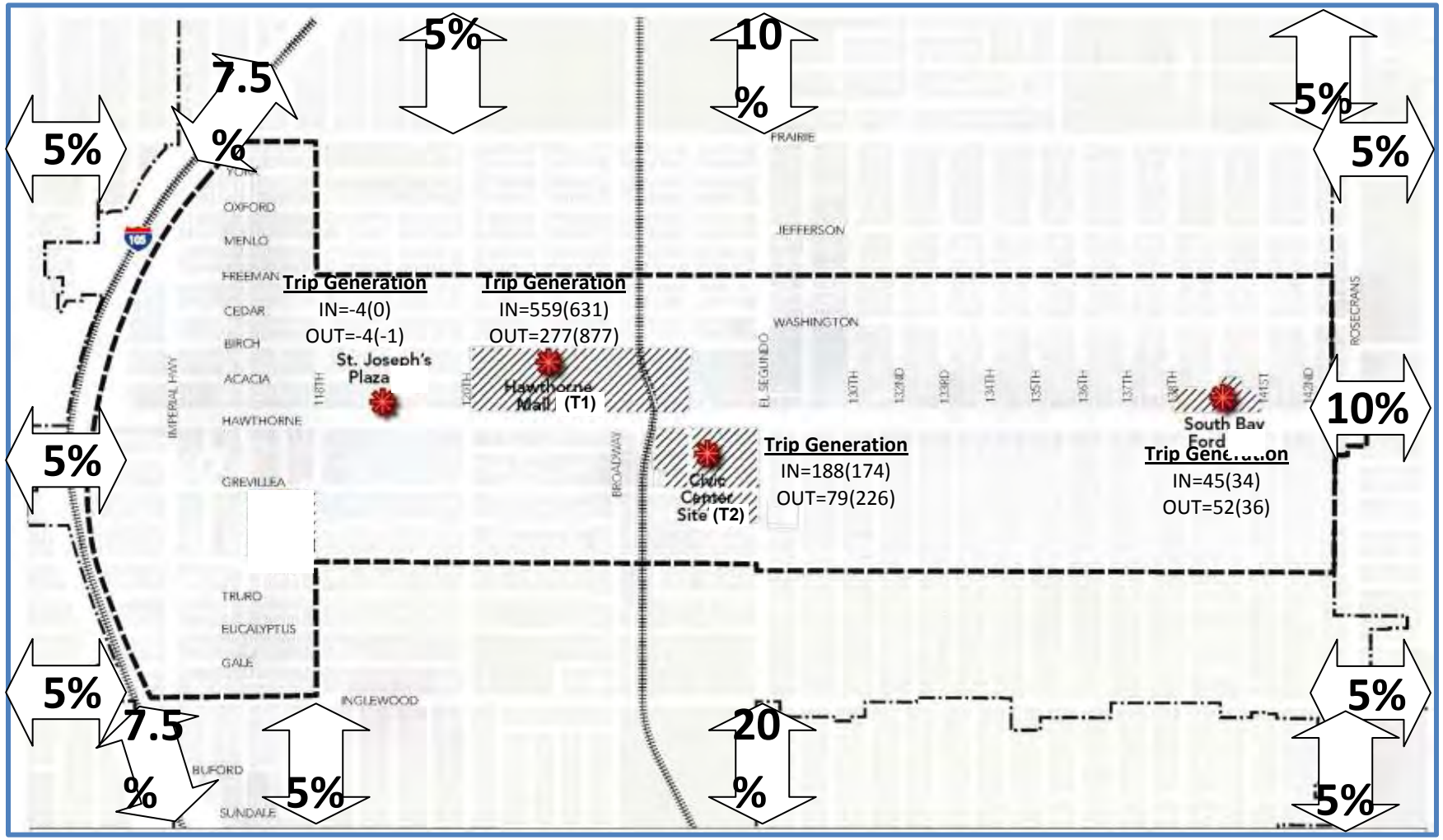

LEGEND:

5% = % of trips in indicated direction

459(708) = AM(PM) peak hour trip generation

N

FIGURE 8: TRIP DISTRIBUTION OF DHSP TRANSFORMATIVE PROJECTS

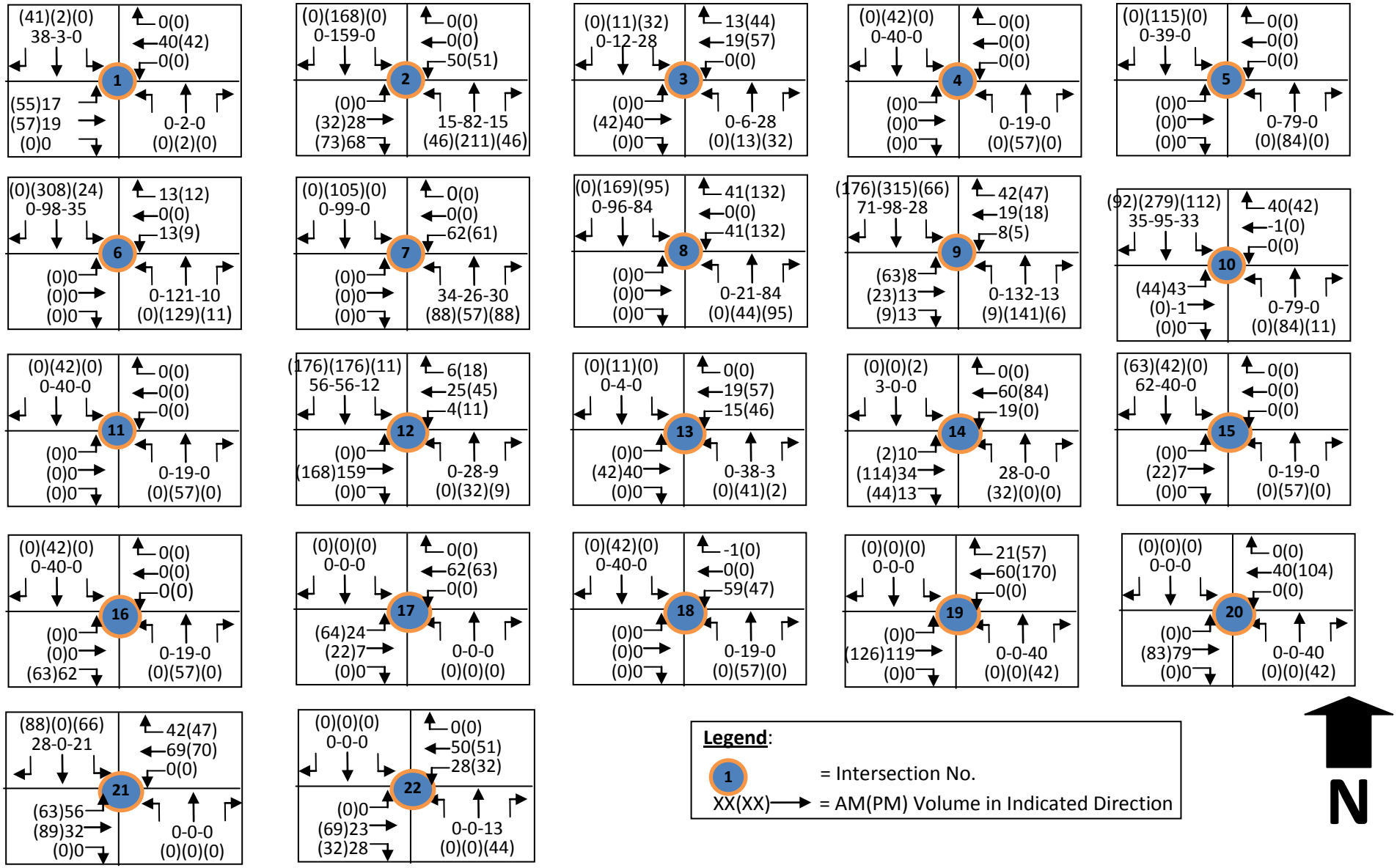

FIGURE 9: FUTURE 2020 AM AND PM PEAK HOUR VOLUME AT STUDY INTERSECTIONS WITH DHSP

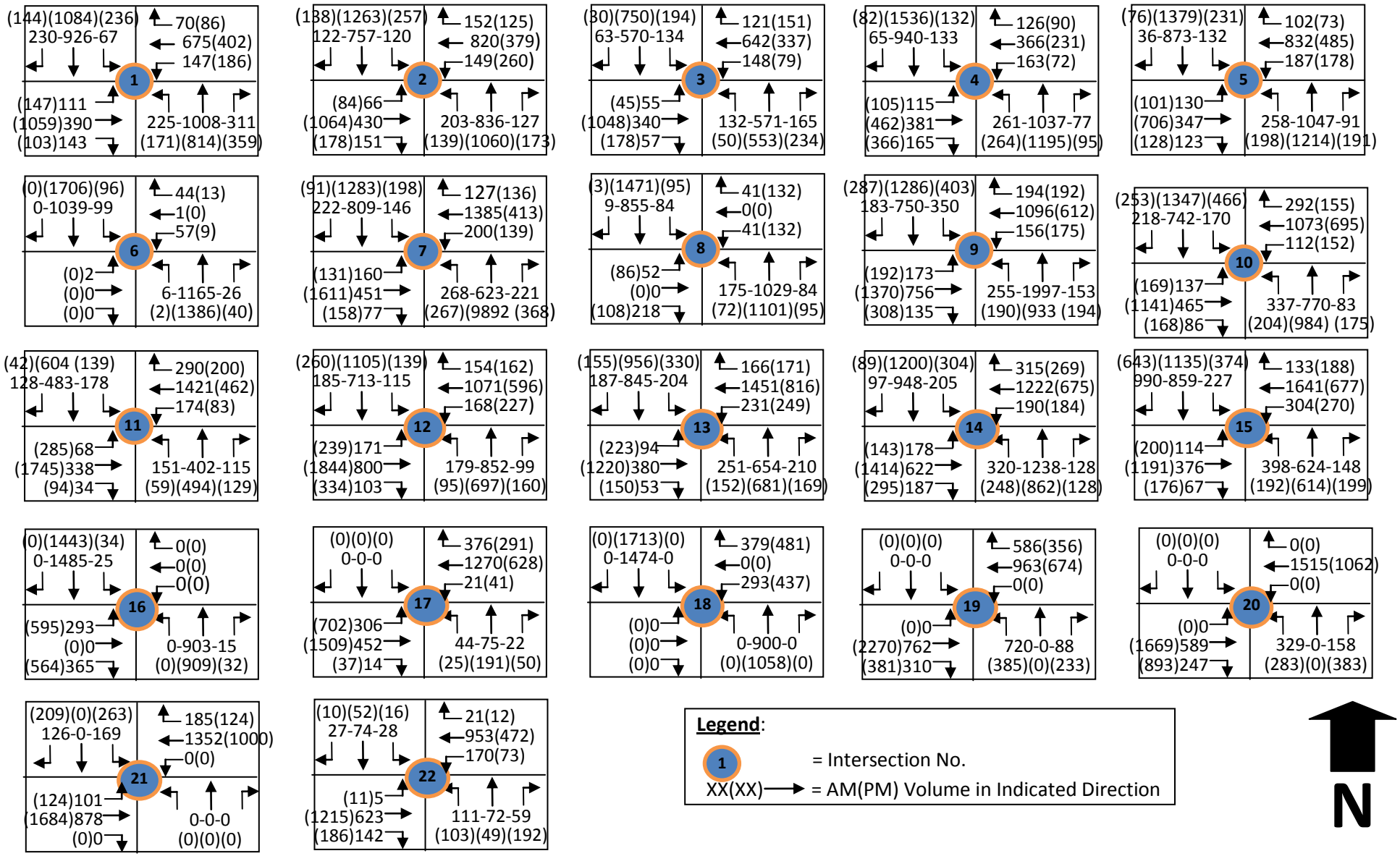

TABLE 7: FUTURE 2020 INTERSECTION LEVEL OF SERVICE WITH DHSP

INTERSECTION	PEAK HOUR	FUTURE 2020 CONDITIONS WITH DHSP	
		V/C	LOS
1. Prairie Av and 120th St	AM	0.778	C
	PM	0.972	E
2. Hawthorne Bl and 120th St	AM	0.655	B
	PM	0.890	D
3. Inglewood Av and 120th St	AM	0.686	B
	PM	0.900	D
4. Hawthorne Bl and Lennox Bl	AM	0.721	C
	PM	0.822	D
5. Hawthorne Bl and Marine Av	AM	0.720	C
	PM	0.845	D
6. Hawthorne Bl and 139th St	AM	0.475	A
	PM	0.471	A
7. Hawthorne Bl and Imperial Hwy	AM	0.823	D
	PM	0.935	E
8. Hawthorne Bl and Broadway	AM	0.528	A
	PM	0.520	A
9. Hawthorne Bl and El Segundo Bl	AM	0.790	C
	PM	0.885	D
10. Hawthorne Bl and Rosecrans Av	AM	0.704	B
	PM	0.791	C
11. Inglewood Av and Imperial Hwy	AM	0.862	D
	PM	0.930	E
12. Inglewood Av and El Segundo Bl	AM	0.855	D
	PM	1.110	F
13. Inglewood Av and Rosecrans Av	AM	0.882	D
	PM	0.981	E
14. Prairie Av and El Segundo Bl	AM	0.900	D
	PM	0.943	E
15. Prairie Av and Imperial Hwy	AM	1.226	F
	PM	0.898	D
16. Prairie Av and I-105 EB Off-ramp	AM	0.637	B
	PM	0.753	C
17. Imperial Hwy and I-105 EB On-ramp	AM	0.644	B
	PM	0.887	D
18. Hawthorne Bl and I-105 WB Off-ramp	AM	0.514	D
	PM	0.641	B
19. El Segundo Bl and I-405 NB On-off-ramp	AM	0.716	C
	PM	0.719	C
20. El Segundo Bl and I-405 SB On-off-ramp	AM	0.530	A
	PM	0.809	D
21. Birch Av and El Segundo Bl	AM	0.589	A
	PM	0.791	C
22. Birch Av and 120th St	AM	0.526	A
	PM	0.691	B

Project Impact Analysis:

A project's traffic impact on the circulation system is determined by comparing the level of service (LOS) and V/C ratios at key intersections under the future pre-project conditions and future post-project conditions. A LOS level D or better is acceptable for urban area intersections. A level of service worse than D (i.e., LOS E or F) is unacceptable.

The LOS, V/C ratio (or ICU) for the study intersections under 2020 cumulative conditions (with project as well as without project) are summarized in **Table 8**. As the results indicate, 7 of the 22 study intersections are expected to operate at an unacceptable LOS (i.e. LOS E or F) during either the AM or PM peak hours (or both peak hours) under 2020 cumulative traffic conditions (with project). The increase in the V/C ratio at these intersections would exceed the threshold of significant impacts.

These intersections are:

- Prairie Av and 120th St
- Hawthorne Bl and Imperial Hwy
- Inglewood Av and Imperial Hwy
- Inglewood Av and El Segundo Bl
- Inglewood Av and Rosecrans Av
- Prairie Av and El Segundo Bl
- Prairie Av and Imperial Hwy

Since the project will significantly impact traffic conditions at these intersections, appropriate off-site traffic mitigation measures will be necessary for the development of the transformative projects to reduce impacts to a level of insignificance.

TABLE 8: FUTURE 2020 INTERSECTION LOS WITH AND WITHOUT DHSP

INTERSECTION	PEAK HOUR	FUTURE 2020 TRAFFIC CONDITIONS				+/- V/C by DHSP Projects
		WITHOUT DHSP		WITH DHSP		
		V/C	LOS	V/C	LOS	
1. Prairie Av and 120th St	AM	0.747	C	0.778	C	0.031
	PM	0.953	E	0.972	E	***0.019***
2. Hawthorne Bl and 120th St	AM	0.610	B	0.655	B	0.045
	PM	0.788	C	0.890	D	0.102
3. Inglewood Av and 120th St	AM	0.648	B	0.686	B	0.038
	PM	0.853	D	0.900	D	0.047
4. Hawthorne Bl and Lennox Bl	AM	0.715	C	0.721	C	0.006
	PM	0.815	D	0.822	D	0.007
5. Hawthorne Bl and Marine Av	AM	0.708	C	0.720	C	0.012
	PM	0.827	D	0.845	D	0.018
6. Hawthorne Bl and 139th St	AM	0.410	A	0.475	A	0.065
	PM	0.414	A	0.471	A	0.057
7. Hawthorne Bl and Imperial Hwy	AM	0.790	C	0.823	D	0.033
	PM	0.844	D	0.935	E	***0.091***
8. Hawthorne Bl and Broadway	AM	0.506	A	0.528	A	0.022
	PM	0.485	A	0.520	A	0.035
9. Hawthorne Bl and El Segundo Bl	AM	0.718	C	0.790	C	0.072
	PM	0.823	D	0.885	D	0.062
10. Hawthorne Bl and Rosecrans Av	AM	0.661	B	0.704	B	0.043
	PM	0.735	C	0.791	C	0.056
11. Inglewood Av and Imperial Hwy	AM	0.850	D	0.862	D	0.012
	PM	0.895	D	0.930	E	***0.035***
12. Inglewood Av and El Segundo Bl	AM	0.814	C	0.855	D	0.041
	PM	0.958	E	1.110	F	***0.152***
13. Inglewood Av and Rosecrans Av	AM	0.877	D	0.882	D	0.005
	PM	0.931	E	0.981	E	***0.050***
14. Prairie Av and El Segundo Bl	AM	0.879	D	0.900	D	0.021
	PM	0.891	D	0.943	E	***0.052***
15. Prairie Av and Imperial Hwy	AM	1.188	F	1.226	F	***0.038***
	PM	0.854	D	0.898	D	***0.044***
16. Prairie Av and I-105 EB Off-ramp	AM	0.590	A	0.637	B	0.047
	PM	0.705	C	0.753	C	0.074
17. Imperial Hwy and I-105 EB On-ramp	AM	0.616	B	0.644	B	0.028
	PM	0.847	D	0.887	D	0.040
18. Hawthorne Bl and I-105 WB Off-ramp	AM	0.470	A	0.514	D	0.044
	PM	0.605	B	0.641	B	0.036
19. El Segundo Bl and I-405 NB On-off-ramp	AM	0.703	B	0.716	C	0.013
	PM	0.680	B	0.719	C	0.039
20. El Segundo Bl and I-405 SB On-off-ramp	AM	0.522	A	0.530	A	0.008
	PM	0.782	C	0.809	D	0.027
21. Birch Av and El Segundo Bl	AM	0.518	A	0.589	A	0.013
	PM	0.722	C	0.791	C	0.039
22. Birch Av and 120th St	AM	0.493	A	0.526	A	0.008
	PM	0.626	B	0.691	B	0.027

Note: *Italic* and **Bold** fonts indicate significant impact due to DHSP projects

Congestion Management Program Analysis:

The Los Angeles County CMP requires analysis of all CMP arterial monitoring intersections in the project vicinity, including monitored freeway on-ramps or off-ramps, where the proposed project will add 50 or more trips during either the AM or PM weekday peak hours. Where project definition is insufficient for meaningful intersection level of service analysis, CMP arterial segment analysis may substitute for intersection analysis. If CMP arterial segments are being analyzed rather than intersections, the study area must include all segments where the proposed project will add 50 or more peak hour trips (total of both directions). Within the study area, the TIA must analyze at least one segment between monitored CMP intersections.

The CMP also requires an analysis of nearby mainline freeway monitoring locations where the project will add 150 or more trips, in either direction, during either the AM or PM weekday peak hours.

For purposes of the CMP, a significant impact occurs when the proposed project increases traffic demand on a CMP facility by 2% of capacity (V/C ≥.0.02), causing LOS F (V/C > 1.00); if the facility is already at LOS F, a significant impact occurs when the proposed project increases traffic demand on a CMP facility by 2% of capacity (V/C ≥ 0.02).

Although there are no CMP arterial monitoring intersection within the City of Hawthorne, a total of 5 freeway on-ramp and off-ramp intersections of I-105 and I-405 in vicinity of DHSP project area were analyzed using project related traffic volumes distributed on to these freeway on- and off-ramps. These are:

- I-105 Freeway EB Off-ramp at Prairie Ave
- I-105 Freeway EB On-ramp at Imperial Highway
- I-105 Freeway WB Off-ramp at Hawthorne Bl
- I-405 Freeway NB On-off-ramps at El Segundo Bl
- I-405 Freeway SB On-off-ramps at El Segundo Bl

The project traffic distribution indicates there will be a maximum of 67 trips on I-105 Freeway during the peak hours in any direction on the east and west of Hawthorne Boulevard. Also, there will be a maximum of 61 trips on I-405 Freeway during the peak hours in any direction on the north and south of El Segundo Boulevard. These project traffic volumes are less than 150 trips threshold of freeway monitoring location analysis requirement per Metropolitan Transportation Authority's Congestion Management Program (CMP) guidelines. Therefore, no freeway monitoring location needs to be analyzed in this TIA.

Freeway Facilities Analysis:

California State Department of Transportation (Caltrans) requires a freeway/State Highway impact analysis, utilizing Caltrans' "Guide for the Preparation of Traffic Impact Studies", for land use proposals that meet any of the following criteria:

- The project's peak hour trips would result in a 1-percent or more increase to the capacity of a freeway mainline segment operating at LOS E or F, based on an assumed capacity of 2,000 vehicles per hour per lane); or
- The project's peak hour trips would result in a 2-percent or more increase to the capacity of a freeway mainline segment operating at LOS D (based on an assumed capacity of 2,000 vehicles per hour per lane); or
- The project's peak hour trips would result in a 1-percent or more increase to the capacity of a freeway off-ramp operating at LOS E or F, based on an assumed ramp capacity of 1,500 vehicles per hour per lane); or
- The project's peak hour trips would result in a 2-percent or more increase to the capacity of a freeway off-ramp operating at LOS D, based on an assumed ramp capacity of 1,500 vehicles per hour per lane).

<u>Freeway Segment Analysis</u>

A freeway segment evaluation was conducted using Caltrans procedures to determine if freeway segment impact analysis is required for the project. A total of 4 mainline freeway segments of I-105 and I-405 in vicinity of DHSP project area were evaluated using project related traffic volumes distributed on to these freeway segments. These are:

- I-105 Freeway E/O Hawthorne Bl (both Eastbound and Westbound directions)
- I-105 Freeway W/O Hawthorne Bl (both Eastbound and Westbound directions)
- I-405 Freeway N/O El Segundo Bl (both Northbound and Southbound directions)
- I-405 Freeway S/O El Segundo Bl (both Northbound and Southbound directions)

The following table shows the results of this determination for freeway segment:

Location	Peak Hour	Project Trips		Freeway Mainline Capacity		Caltrans 1% Criteria for Impact Analysis		Freeway Impact Analysis Required?
		WB/NB	EB/SB	WB/NB	EB/SB	WB/NB	EB/SB	
I-105 Freeway E/O Hawthorne Bl	AM	59	24	8,000	8,000	80	80	No
	PM	47	64	8,000	8,000	80	80	No
I-105 Freeway W/O Hawthorne Bl	AM	24	62	8,000	8,000	80	80	No
	PM	64	63	8,000	8,000	80	80	No
I-405 Freeway N/O El Segundo Bl	AM	21	40	10,000	10,000	100	100	No
	PM	57	42	10,000	10,000	100	100	No
I-405 Freeway S/O El Segundo Bl	AM	40	20	10,000	10,000	100	100	No
	PM	42	66	10,000	10,000	100	100	No

The number of lanes on I-105 Freeway is 4 per direction on the east as well as west of the Hawthorne Boulevard. The capacity of a freeway lane is 2,000 vehicles per hour; therefore, the capacity of these freeway segments is 8,000 vehicles per hour for both directions. The number of lanes on I-405 Freeway is 5 per direction on the north as well as south of the El Segundo Boulevard. The capacity of these freeway segments is 10,000 vehicles per hour for both directions.

The existing I-105 Freeway as well as I-405 Freeway segments in the study area are operating at LOS F under the worst case scenario. The criteria for impact analysis of a freeway segment are defined as increase in trips due to a project by 1% or more of capacity (i. e. 80 trips for I-105 and 100 trips for I-405 segments) at LOS E or F. As shown in the table, the project will add a maximum of 64 trips to I-105 Freeway traffic volume which are less than 80 trips during the peak hours. Similarly, the project will add a maximum of 66 trips to I-405 Freeway traffic volume which are less than 100 trips during the peak hours. Therefore, the freeway segment impact analysis per Caltrans methodology is not required. In other words, the project traffic would not have a significant impact on the I-105 or I-405 Freeway segments in the study area.

Freeway Off-ramp Analysis

A freeway off-ramp evaluation was conducted using Caltrans procedures to determine if freeway off-ramp impact analysis is required for the project. A total of 4 freeway off-ramps of I-105 ad I-405 in vicinity of DHSP project area were evaluated using project related traffic volumes distributed on to these freeway off-ramps. These are:

- I-105 Freeway EB Off-ramp at Prairie Ave
- I-105 Freeway WB Off-ramp at Hawthorne Bl
- I-405 Freeway NB Off-ramp at El Segundo Bl
- I-405 Freeway SB Off-ramp at El Segundo Bl

The number of lanes on I-105 Freeway Eastbound Off-ramp at Prairie Avenue as well as that on I-105 Freeway Westbound Off-ramp at Hawthorne Boulevard is 3. The capacity of a freeway off-ramp lane is 1,500 vehicles per hour; therefore, the capacity of these freeway off-ramps is 4,500 vehicles per hour.

Similarly, the number of lanes on I-405 Freeway Northbound Off-ramp at El Segundo and that on I-405 Freeway Southbound Off-ramp at El Segundo Boulevard is 3 and 2, respectively. Therefore, the capacity of these freeway off-ramps are 4,500 and 3,000 vehicles per hour, respectively.

The following table shows the results of this determination for freeway off-ramps:

Location	Peak Hour	Project Trips	Freeway Off-ramp Capacity	Caltrans 1% Criteria for Impact Analysis	Caltrans 2% Criteria for Impact Analysis	Further Off-ramp Analysis Required?
I-105 Freeway EB Off-ramp at Prairie Ave	AM	62	4,500	45	90	No
	PM	63	4,500	45	90	No
I-105 Freeway WB Off-ramp at Hawthorne Bl	AM	59	4,500	45	90	No
	PM	47	4,500	45	90	No
I-405 Freeway NB Off-ramp at El Segundo Bl	AM	40	4,500	45	90	No
	PM	42	4,500	45	90	No
I-405 Freeway SB Off-ramp at El Segundo Bl	AM	40	3,000	30	60	No
	PM	42	3,000	30	60	No

The criteria for impact analysis of a freeway off-ramp are defined as increase in peak hour trips due to project by 1% or more of off-ramp capacity at LOS E or F, and 2% or more of capacity at LOS D. The I-105 Freeway off-ramps at Prairie Avenue as well as at Hawthorne Boulevard are operating at LOS A. Similarly, The I-405 Freeway off-ramps at El Segundo Boulevard are operating at LOS A. The LOS of these off-ramps under 2020 traffic conditions with DHSP projects are shown in the following:

Off-ramp	Peak Hour	Existing 2015 Volume	2020 W/ Growth	DHSP Added Volume	2020 W/ DHSP	DHSP % in 2020	Off-Ramp Capacity	2020 V/C Ratio	2020 LOS
I-105 EB Off-Ramp at Prairie Ave	AM	588	596	62	658	7.70%	4,500	0.14	A
	PM	1082	1096	63	1159	5.75%	4,500	0.26	A
I-105 WB Off-Ramp at Hawthorne Bl	AM	606	614	58	673	6.97%	4,500	0.15	A
	PM	860	871	47	918	5.39%	4,500	0.20	A
I-405 NB Off-Ramp at El Segundo Bl	AM	758	768	40	808	4.01%	4,500	0.18	A
	PM	568	575	42	618	7.31%	4,500	0.14	A
I-405 SB Off-Ramp at El Segundo Bl	AM	441	447	40	479	6.70%	3,000	0.16	A
	PM	615	623	42	668	6.79%	3,000	0.22	A

The impact thresholds are 90 trips at 2% of ramp capacity for the off-ramps of I-105 freeway at Prairie Avenue and at Hawthorne Boulevard as well as for the off-ramps of I-405 freeway at El Segundo Boulevard. The project will add a maximum of 63 trips during the peak hours to these off-ramps of I-105 and I-405 Freeways. Similarly, the impact thresholds are 60 trips at 2% of ramp capacity for the southbound off-ramp of I-405 freeway at El Segundo Boulevard. The project will add a maximum of 42 trips during the peak hours to this off-ramp of I-405 Freeway. These off-ramp volumes from the project does not exceed the criteria for further off-ramp analysis. Therefore, the freeway off-ramp impact analysis per Caltrans methodology is not required. In other words, the project traffic would not have a significant impact on the I-105 and I-405 Freeway off-ramps in the study area.

Cumulative 2035 Conditions and Level of Service:

Cumulative Project Trip Generation

It is assumed that all development of the Transformative Project sites are completed by 2020, with no changes through 2035. The net development potential of the remaining DHSP area is projected to decrease by 338 residential units from the existing housing stock of 7,116 units, and increase by approximately 1.344 million square feet of non-residential building space (from existing 3.56 million square feet) by 2035.

Figure 10 shows land use/zoning and location of future potential housing and non-residential developments of the remaining areas within DHSP.

Table 9 shows traffic generation for these additional development potential in the remaining DHSP area by 2035. The table also shows estimated trip generation by existing uses. For both existing and cumulative developments, it was assumed that non-residential uses are 50% commercial retail and 50% commercial uses. Also, for residential uses, the trip generation rates for condominium uses were used for a worst-case scenario. Finally, the cumulative trip generation estimates are shown as percentages of existing trip generation estimates for daily and peak hour volumes. As shown, these additional developments will increase the AM peak hour volumes by 19.6% and PM peak hour volumes by 24.4% between existing 2015 and future 2035.

For trip distribution purposes, the percentage increases of existing trips due to cumulative developments were applied to existing peak hour volumes at each study intersection. The results provided traffic volumes at each study intersection under 2035 cumulative traffic scenario. The traffic volumes to be generated by 4 Transformative Projects were added to these volumes to develop 2035 cumulative traffic volumes with DHSP projects.

The future 2035 cumulative traffic volumes and traffic from DHSP projects at the study intersections are shown in **Figure 11**.

Cumulative Levels of Service

Level of service analysis was conducted for the 22 key intersections with projected future traffic volumes with and without DHSP transformative projects. The results are shown in **Table 10**.

FIGURE 10: LAND USE/ZONING WITHIN DHSP AREA

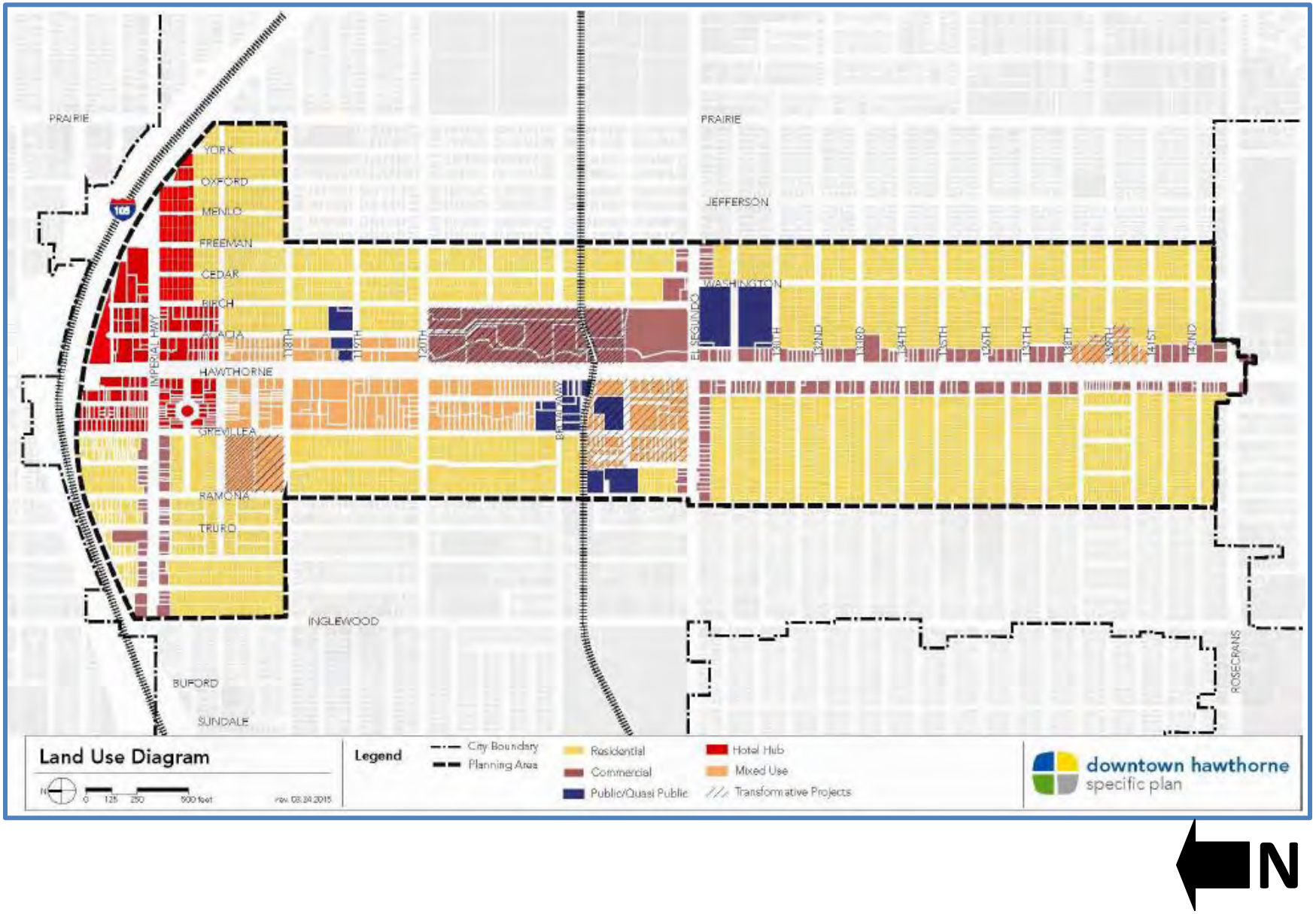

TABLE 9: TRIP GENERATION BY PROJECTED DEVELOPMENTS IN REMAINING DHSP AREA

Building Development Potential 2035 Scenario

ITE Land Use Code	Land Use	Unit	Trip Generation Rates							Amount of Unit	Estimated Trip Generation						
			Daily	AM Total	AM In	AM Out	PM Total	PM In	PM Out		Daily	AM Total	AM In	AM Out	PM Total	PM In	PM Out
Existing Residential and Commercial Uses																	
230	Residential Condominium	DU	5.81	0.44	17%	83%	0.51	67%	33%	7,116	41,344	3,131	532	2,599	3,629	2,432	1,198
820	Shopping Center	KSF	42.94	1.00	61%	39%	3.73	49%	51%	1,780.000	76,433	1,780	1,086	694	6,639	3,253	3,386
	Less Pass-by Trips (20%)										22,930	534	326	208	1,992	976	1,016
710	Office	KSF	11.03	1.56	88%	12%	1.49	17%	83%	1,780.000	19,633	2,777	2,444	333	2,652	451	2,201
Total											114,481	7,154	3,736	3,418	10,929	5,160	5,769
Internal Capture (20%)											22,896	1,431	747	684	2,186	1,032	1,154
Net Total											91,584	5,723	2,989	2,734	8,743	4,128	4,615
Additional Cumulative Developments by 2035:																	
230	Residential Condominium	DU	5.81	0.44	17%	83%	0.51	67%	33%	-338	-1,964	-149	-25	-123	-172	-115	-57
820	Shopping Center)	KSF	42.94	1.00	61%	39%	3.73	49%	51%	672.000	28,856	672	410	262	2,507	1,228	1,278
	Less Pass-by Trips (20%)										8,309	194	118	75	722	354	368
710	Office	KSF	11.03	1.56	88%	12%	1.49	17%	83%	672.000	7,412	1,048	923	126	1,001	170	831
Total											26,223	1,437	1,157	279	2,621	972	1,648
Internal Capture (20%)											5,245	287	231	56	524	194	330
Net Total											20,978	1,149	926	223	2,097	778	1,319
% INCREASE OF EXISTING TRAFFIC DUE TO CUMULATIVE DEVELOPMENT:											23.4%	19.6%	31.9%	6.1%	24.4%	18.9%	29.4%

FIGURE 11: FUTURE 2035 AM AND PM PEAK HOUR VOLUME AT STUDY INTERSECTIONS WITH DHSP

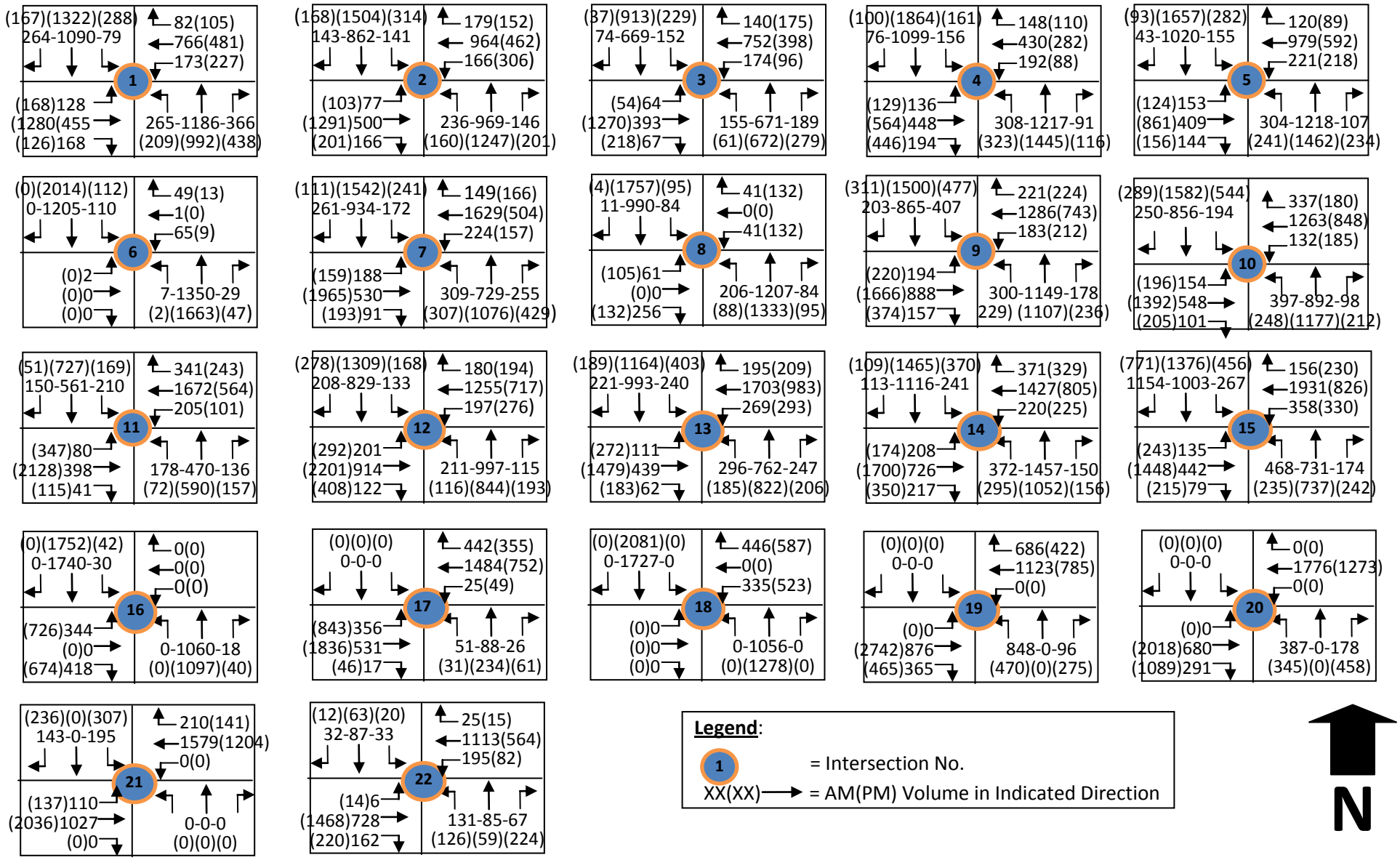

TABLE 10: FUTURE 2035 INTERSECTION LOS WITH AND WITHOUT DHSP

INTERSECTION	PEAK HOUR	FUTURE 2035 TRAFFIC CONDITIONS				+/- V/C by DHSP Projects
		WITHOUT DHSP		WITH DHSP		
		V/C	LOS	V/C	LOS	
1. Prairie Av and 120th St	AM	0.861	D	0.893	D	0.032
	PM	1.141	F	1.159	F	***0.018***
2. Hawthorne Bl and 120th St	AM	0.707	C	0.746	C	0.039
	PM	0.940	E	1.041	F	***0.101***
3. Inglewood Av and 120th St	AM	0.744	C	0.783	C	0.039
	PM	1.019	F	1.066	F	***0.047***
4. Hawthorne Bl and Lennox Bl	AM	0.823	D	0.830	D	0.007
	PM	0.972	E	0.979	E	***0.007***
5. Hawthorne Bl and Marine Av	AM	0.815	D	0.826	D	0.011
	PM	0.987	E	1.005	F	***0.018***
6. Hawthorne Bl and 139th St	AM	0.464	A	0.530	A	0.066
	PM	0.483	A	0.540	A	0.057
7. Hawthorne Bl and Imperial Hwy	AM	0.912	E	0.945	E	***0.033***
	PM	1.008	F	1.099	F	***0.091***
8. Hawthorne Bl and Broadway	AM	0.578	A	0.597	A	0.019
	PM	0.569	A	0.604	A	0.035
9. Hawthorne Bl and El Segundo Bl	AM	0.827	D	0.899	D	***0.072***
	PM	0.982	E	1.044	F	0.***062***
10. Hawthorne Bl and Rosecrans Av	AM	0.760	C	0.803	C	0.043
	PM	0.874	D	0.931	E	***0.057***
11. Inglewood Av and Imperial Hwy	AM	0.982	E	0.994	E	***0.012***
	PM	1.069	F	1.105	F	***0.036***
12. Inglewood Av and El Segundo Bl	AM	0.940	E	0.981	E	***0.041***
	PM	1.147	F	1.299	F	***0.152***
13. Inglewood Av and Rosecrans Av	AM	1.014	F	1.019	F	0.005
	PM	1.113	F	1.164	F	0.***051***
14. Prairie Av and El Segundo Bl	AM	1.016	F	1.035	F	***0.019***
	PM	1.065	F	1.117	F	***0.052***
15. Prairie Av and Imperial Hwy	AM	1.380	F	1.419	F	***0.039***
	PM	1.020	F	1.064	F	***0.044***
16. Prairie Av and I-105 EB Off-ramp	AM	0.677	B	0.724	C	0.047
	PM	0.839	E	0.886	D	0.047
17. Imperial Hwy and I-105 EB On-ramp	AM	0.708	C	0.735	C	0.027
	PM	1.012	F	1.052	F	***0.040***
18. Hawthorne Bl and I-105 WB Off-ramp	AM	0.536	A	0.579	A	0.043
	PM	0.716	C	0.752	C	0.036
19. El Segundo Bl and I-405 NB On-off-ramp	AM	0.810	D	0.823	D	0.013
	PM	0.808	D	0.843	D	0.035
20. El Segundo Bl and I-405 SB On-off-ramp	AM	0.596	A	0.604	A	0.008
	PM	0.932	E	0.959	E	***0.027***
21. Birch Av and El Segundo Bl	AM	0.592	A	0.686	B	0.032
	PM	0.859	D	0.925	E	***0.018***
22. Birch Av and 120th St	AM	0.562	A	0.607	B	0.032
	PM	0.742	C	0.801	C	0.018

Note: *Italic* and **Bold** fonts indicate significant impact due to DHSP projects

The results indicate that 16 of the 22 study intersections would be operating at an unacceptable LOS E or F during either AM or PM or both peak hours. These intersections are:

- Prairie Av and 120th St
- Hawthorne Bl and 120th St
- Inglewood Av and 120th St
- Hawthorne Bl and Lennox Bl
- Hawthorne Bl and Marine Av
- Hawthorne Bl and Imperial Hwy
- Hawthorne Bl and El Segundo Bl
- Hawthorne Bl and Rosecrans Av
- Inglewood Av and Imperial Hwy
- Inglewood Av and El Segundo Bl
- Inglewood Av and Rosecrans Av
- Prairie Av and El Segundo Bl
- Prairie Av and Imperial Hwy
- Imperial Hwy and I-105 EB On-ramp
- El Segundo Bl and I-405 SB On-off-ramp
- Birch Av and El Segundo Bl

A comparison between 2035 with DHSP projects and without DHSP projects indicates that except for the intersection of Hawthorne Boulevard and Lennox Boulevard, the remaining 15 intersections show project related impacts (i.e., increase in V/C ratio due to transformative projects is more than 0.01) in 2035.

Mitigation Measures:

Site-specific Mitigation Measures

Mitigation Measures for 2020 Cumulative Conditions with DHSP:

The following 7 intersections show impacts, i.e., intersection performance will deteriorate to a level of service (LOS) worse than D, as a result of 2020 cumulative traffic with 4 proposed transformative projects. These intersections are:

- Prairie Av and 120th St
- Hawthorne Bl and Imperial Hwy
- Inglewood Av and Imperial Hwy
- Inglewood Av and El Segundo Bl
- Inglewood Av and Rosecrans Av
- Prairie Av and El Segundo Bl
- Prairie Av and Imperial Hwy

The following mitigation measures are identified to improve these intersections to perform at LOS to D or better:

Prairie Av and 120th St

Provide 1 through lane on the eastbound approach if right-of-way is available or acquiring additional right-of-way is feasible. This will improve the intersection LOS from C (V/C ratio = 0.778) to LOS C (V/C ratio = 0.778) during the AM peak hour, and from LOS E (V/C ratio = 0.972) to LOS D (V/C ratio = 0.850) during the PM peak hour.

Hawthorne Bl and Imperial Hwy

Provide 1 through lane on the eastbound approach if right-of-way is available or acquiring additional right-of-way is feasible. This will improve the intersection LOS from D (V/C ratio = 0.823) to LOS D (V/C ratio = 0.823) during the AM peak hour, and from LOS E (V/C ratio = 0.935) to LOS D (V/C ratio = 0.843) during the PM peak hour.

Inglewood Av and Imperial Hwy

Provide 1 through lane on the eastbound approach if right-of-way is available or acquiring additional right-of-way is feasible. This will improve the intersection LOS from D (V/C ratio = 0.862) to LOS D (V/C ratio = 0.862) during the AM peak hour, and from LOS E (V/C ratio = 0.930) to LOS D (V/C ratio = 0.835) during the PM peak hour.

Inglewood Av and El Segundo Bl.

Provide 1 through lane and 1 right-turn lane on the southbound approach and 1 through lane on the eastbound approach if right-of-way is available or acquiring additional right-of-way is feasible. This will improve the intersection LOS from D (V/C ratio = 0.855) to LOS D (V/C ratio = 0.831) during the AM peak hour, and from LOS F (V/C ratio = 1.110) to LOS D (V/C ratio = 0.883) during the PM peak hour.

Inglewood Av and Rosecrans Av

Provide 1 through lane on the northbound approach and 1 through lane on the eastbound approach if right-of-way is available or acquiring additional right-of-way is feasible. This will improve the intersection LOS from D (V/C ratio = 0.882) to LOS D (V/C ratio = 0.882) during the AM peak hour, and from LOS E (V/C ratio = 0.981) to LOS D (V/C ratio = 0.840) during the PM peak hour.

Prairie Av and El Segundo Bl

Provide 1 right-turn lane on the eastbound approach and 1 right-turn lane on the westbound approach if right-of-way is available or acquiring additional right-of-way is feasible. This will improve the intersection LOS from D (V/C ratio = 0.900) to LOS D (V/C ratio = 0.834) during the AM peak hour, and from LOS E (V/C ratio = 0.943) to LOS D (V/C ratio = 0.882) during the PM peak hour.

Prairie Av and Imperial Hwy

Provide 1 right-turn lane on the southbound approach if right-of-way is available or acquiring additional right-of-way is feasible. This will improve the intersection LOS from F (V/C ratio = 1.226) to LOS D (V/C ratio = 0.858) during the AM peak hour, and from LOS D (V/C ratio = 0.898) to LOS D (V/C ratio = 0.857) during the PM peak hour.

Mitigation Measures for 2035 Cumulative Conditions with DHSP:

The following 16 intersections show impacts, i.e., intersection performance will deteriorate to a level of service (LOS) worse than D, as a result of 2035 cumulative traffic with 4 proposed transformative projects. These intersections are:

- Prairie Av and 120th St
- Hawthorne Bl and 120th St
- Inglewood Av and 120th St
- Hawthorne Bl and Lennox Bl
- Hawthorne Bl and Marine Av
- Hawthorne Bl and Imperial Hwy
- Hawthorne Bl and El Segundo Bl
- Hawthorne Bl and Rosecrans Av
- Inglewood Av and Imperial Hwy
- Inglewood Av and El Segundo Bl
- Inglewood Av and Rosecrans Av
- Prairie Av and El Segundo Bl
- Prairie Av and Imperial Hwy
- Imperial Hwy and I-105 EB On-ramp
- El Segundo Bl and I-405 SB On-off-ramp
- Birch Av and El Segundo Bl

The following mitigation measures are identified to improve these intersections to perform at LOS to D or better:

Prairie Av and 120th St

Provide 1 right-turn lane on the northbound approach, 1 right-turn lane on the southbound approach, 1 through lane and 1 right-turn lane on the eastbound approach, and 1 left-turn lane on the westbound approach if right-of-way is available or acquiring additional right-of-way is feasible. This will improve the intersection LOS from D (V/C ratio = 0.893) to LOS D (V/C ratio = 0.837) during the AM peak hour, and from LOS F (V/C ratio = 1.159) to LOS D (V/C ratio = 0.852) during the PM peak hour.

Hawthorne Bl and 120th St

Provide 1 through lane on the southbound approach and 1 through lane on the eastbound approach if right-of-way is available or acquiring additional right-of-way is feasible. This will improve the intersection LOS from C (V/C ratio = 0.745) to LOS C (V/C ratio = 0.707) during the AM peak hour, and from LOS F (V/C ratio = 1.041) to LOS D (V/C ratio = 0.852) during the PM peak hour.

Inglewood Av and 120th St

Provide 1 through lane and 1 right-turn lane on the eastbound approach if right-of-way is available or acquiring additional right-of-way is feasible. This will improve the intersection LOS from C (V/C ratio = 0.783) to LOS C (V/C ratio = 0.783) during the AM peak hour, and from LOS F (V/C ratio = 1.066) to LOS D (V/C ratio = 0.865) during the PM peak hour.

Hawthorne Bl and Lennox Bl

Provide 1 right-turn lane on the eastbound approach if right-of-way is available or acquiring additional right-of-way is feasible. This will improve the intersection LOS from D (V/C ratio = 0.830) to LOS D (V/C ratio = 0.830) during the AM peak hour, and from LOS E (V/C ratio = 0.979) to LOS D (V/C ratio = 0.865) during the PM peak hour.

Hawthorne Bl and Marine Av

Provide 1 through lane on the eastbound approach and 1 left-turn lane on the westbound approach if right-of-way is available or acquiring additional right-of-way is feasible. This will improve the intersection LOS from D (V/C ratio = 0.826) to LOS D (V/C ratio = 0.826) during the AM peak hour, and from LOS F (V/C ratio = 1.005) to LOS D (V/C ratio = 0.839) during the PM peak hour.

Hawthorne Bl and Imperial Hwy

Provide 1 through lane on the southbound approach, 1 through lane on the eastbound approach, and 1 left turn lane on the westbound approach if right-of-way is available or acquiring additional right-of-way is feasible. This will improve the intersection LOS from E (V/C ratio = 0.945) to LOS D (V/C ratio = 0.882) during the AM peak hour, and from LOS F (V/C ratio = 1.099) to LOS D (V/C ratio = 0.866) during the PM peak hour.

Hawthorne Bl and El Segundo Bl

Provide 1 right-turn lane on the northbound approach and 1 through lane and 1 right-turn lane on the eastbound approach if right-of-way is available or acquiring additional right-of-way is feasible. This will improve the intersection LOS from D (V/C ratio = 0.899) to LOS D (V/C ratio = 0.862) during the AM peak hour, and from LOS E (V/C ratio = 1.044) to LOS D (V/C ratio = 0.830) during the PM peak hour.

Hawthorne Bl and Rosecrans Av

Provide 1 through lane on the eastbound approach if right-of-way is available or acquiring additional right-of-way is feasible. This will improve the intersection LOS from C (V/C ratio = 0.803) to LOS C (V/C ratio = 0.803) during the AM peak hour, and from LOS E (V/C ratio = 0.931) to LOS D (V/C ratio = 0.848) during the PM peak hour.

Inglewood Av and Imperial Hwy

Provide 1 through lane on the northbound approach, 1 through lane on the eastbound approach, and 1 right-turn lane on the westbound approach if right-of-way is available or acquiring additional right-of-way is feasible. This will improve the intersection LOS from E (V/C ratio = 0.994) to LOS D (V/C ratio = 0.832) during the AM peak hour, and from LOS F (V/C ratio = 1.105) to LOS D (V/C ratio = 0.804) during the PM peak hour.

Inglewood Av and El Segundo Bl

Provide 1 through lane on the northbound approach, 2 through lanes and 1 right-turn lane on the southbound approach, 1 through lane on the eastbound approach, and 1 left-turn lane on the westbound approach if right-of-way is available or acquiring additional right-of-way is feasible. This will improve the intersection LOS from E (V/C ratio = 0.981) to LOS D (V/C ratio = 0.840) during the AM peak hour, and from LOS F (V/C ratio = 1.299) to LOS D (V/C ratio = 0.860) during the PM peak hour.

Inglewood Av and Rosecrans Av

Provide 1 through lane on the northbound approach, 1 through lane on the southbound approach, 1 through lane on the eastbound approach, and 1 left-turn lane and 1 through lane on the westbound approach if right-of-way is available or acquiring additional right-of-way is feasible. This will improve the intersection LOS from F (V/C ratio = 1.019) to LOS D (V/C ratio = 0.858) during the AM peak hour, and from F (V/C ratio = 1.164) to LOS D (V/C ratio = 0.879) during the PM peak hour.

Prairie Av and El Segundo Bl

Provide 1 left-turn lane and 1 right-turn lane on the northbound approach, 1 left-turn lane and 1 through lane on the southbound approach, 1 right-turn lane on the eastbound approach, and 1 right-turn lane on the westbound approach if right-of-way is available or acquiring additional right-of-way is feasible. This will improve the intersection LOS from F (V/C ratio = 1.035) to LOS D (V/C ratio = 0.857) during the AM

peak hour, and from F (V/C ratio = 1.117) to LOS D (V/C ratio = 0.880) during the PM peak hour.

Prairie Av and Imperial Hwy

Provide 1 right-turn lane on the southbound approach, 1 through lane on the eastbound approach, and 1 left-turn lane and 1 through lane on the westbound approach if right-of-way is available or acquiring additional right-of-way is feasible. This will improve the intersection LOS from F (V/C ratio = 1.419) to LOS D (V/C ratio = 0.882) during the AM peak hour, and from F (V/C ratio = 1.064) to LOS D (V/C ratio = 0.843) during the PM peak hour.

Imperial Hwy and I-105 EB On-ramp

Provide 1 left-turn lane on the eastbound approach if right-of-way is available or acquiring additional right-of-way is feasible. This will improve the intersection LOS from C (V/C ratio = 0.735) to LOS B (V/C ratio = 0.636) during the AM peak hour, and from LOS F (V/C ratio = 1.052) to LOS D (V/C ratio = 0.818) during the PM peak hour.

El Segundo Bl and I-405 SB On-off-ramp

Provide 1 right-turn lane on the eastbound approach if right-of-way is available or acquiring additional right-of-way is feasible. This will improve the intersection LOS from A (V/C ratio = 0.604) to LOS A (V/C ratio = 0.604) during the AM peak hour, and from LOS E (V/C ratio = 0.959) to LOS D (V/C ratio = 0.806) during the PM peak hour.

Birch Ave and El Segundo Bl

Provide 1 left-turn only lane and 1 right-turn lane on the southbound approach if right-of-way is available or acquiring additional right-of-way is feasible. This will improve the intersection LOS from B (V/C ratio = 0.686) to LOS B (V/C ratio = 0.631) during the AM peak hour, and from E (V/C ratio = 0.925) to LOS D (V/C ratio = 0.838) during the PM peak hour.

Proposed City-wide Mitigation Measures

In order to mitigate traffic impacts at the identified intersections if right-of-way is not available or acquiring additional right-of-way is not feasible for implementing site-specific mitigation measures identified above, and to further improve area-wide circulation system, a number of transportation improvement measure should be considered for implementation. The following is a list of mitigation measures that can be implemented in phases through 2035 as the DHSP transformative projects are developed:

- Signal Synchronization and Signal Timing

  All the traffic signals along major arterials can be interconnected so that a coordinated signal timing plan can be implemented so that vehicle stopped delay and traffic congestion are minimized. Most of the major arterials in Los Angeles County are already under County's Traffic Signal Synchronization System

(TSSP) and others are in the process of implementation by the County. This strategy will greatly enhance area-wide mobility and efficiency in traffic circulation through arterial intersections when fully completed.

- Automated Traffic Surveillance and Control (ATSAC) and Adaptive Traffic Control (ATC)

  ATSAC and ATC systems are based on a comprehensive monitoring of traffic and circulation of area streets and intersections from a centralized location, usually a Transportation Management Center (TMC) at the City Hall, using video cameras and sensors located at various key locations. The ATSAC system allows City's traffic engineers to observe and adjust signal timing at the intersections based on real-time traffic demands at various approaches for various movements. The ATC system provides real-time advisories and guidance to motorists through various changeable message signs (CMS) located at key arterial locations upstream of congested intersections. These systems are extensively in use in the City of Los Angeles and have been considered as effective mitigation of traffic impacts, reducing intersection V/C ratio by 0.07 with ATSAC system and by 0.03 with ATC system. When used in combination, these mitigation measures can reduce V/C ratio by a total of 0.10, thereby significantly improving circulation conditions.

- Single or Dual Left-turn and/or Right-turn lanes at Intersection Approaches

  Many of the major intersections currently provide single of dual left-turn and/or right-turn lane(s) at major street approaches. These intersections as well as other intersections can be further evaluated to determine if any additional turn movement lanes need to be added. If needed, additional lanes can be restriped within existing pavement widths by reducing through lane width to as low as 10 feet or 11 feet.

- Carpooling/Rideshare Programs

  The Metropolitan Transportation Authority (MTA) and other transportation agencies in the region offer rideshare services to area employers. Metro Commute Services, funded and implemented by MTA, has offered rideshare services to area employers since 2002. Metro Commute Services provides carpool/vanpool match lists, and additional survey data services to calculate employer work site average vehicle ridership for rideshare option.

  Employers who are committed to promoting ridesharing at their work sites and provide rideshare incentives to employees through Metro Commute Services programs are eligible to participate in Metro Rewards and the Guaranteed Ride Home Program. Metro Rewards, which was initiated under the name Rideshare 2000 in the year 2000 before being renamed in 2002, provides a nominal financial reward for employees that commit to rideshare. The Guaranteed Ride Home Program, initiated in 2006, provides a taxi ride or rental car to ridesharing employees in emergency situations, such as unexpected illnesses or unscheduled overtime.

Various vanpool programs have been undertaken in recent years by several agencies. The Metro Vanpool Program, administered by MTA, is a special incentive program designed to introduce commuters to vanpooling. Eligible commuters receive a vanpool lease subsidy of up to $400 per month, not to exceed 50% of the monthly lease costs for commuter vanpools of 7-15 passengers in return for reporting vanpool operating data and making the vanpool open to the public.

- Shuttle Service to and from Peripheral Parking Lots

  Large employers and shopping center operators can provide their employees, visitors or patrons free shuttle service to and from peripheral parking lots, metro green line stations and other transit stops in order to reduce vehicular trips in and around adjacent circulation system and help mitigate traffic impacts and congestion. Hotels can also provide similar service for their guests to and from Los Angeles International Airport (LAX) and other regional airports,

- Incentives to Increase Transit Ridership

  The Los Angeles County Metropolitan Transportation Authority (MTA) or Metro provides an extensive bus service through Hawthorne and adjacent areas connecting commuters and visitors to area-wide employment, shopping, residential, entertainment commercial and other attraction centers, Hawthorne Boulevard is served by Line Nos. 40, and 740, while Line Nos. 215, 211, 126 serve Inglewood Avenue, Prairie Avenue and Yukon Avenue, respectively. Line Nos. 120 and 125 serve Imperial Highway and Rosecrans Avenue, respectively. Municipal bus operators, Gardena Municipal Bus Service and Torrance Transit lines run along El Segundo Boulevard. Metro Green Line Rail service, running along I-105 Freeway connecting cities on the west and east serves Hawthorne businesses and residents through its Hawthorne/Lennox Station located at Hawthorne Boulevard.

  Encouraging ridership on transit is an important strategy for reducing vehicular trips on circulation system. The following services are particularly useful because they increase the potential for commuters to ride transit:

  a) EZ Transit Pass: The EZ transit pass encourages greater transit ridership by providing the ability for transit patrons to use different transit services with only one pass. It allows riders to transfer from one transit system to another without worrying about transfer payments or fare differentials.

  b) Transit Access Pass (TAP): The EZ transit pass and all other paper passes have been transitioning to a universal fare system known as TAP. TAP is a plastic “smart card” that can be used month after month to pay fares. Users simply tap their cards on the bus/rail farebox and a “beep” message verifies that the cards are valid. Like the EZ transit pass, TAP is used for transfers among different transit systems.

c) Employer-based transit fare subsidies: employers and transit agencies encourage transit use throughout the county with pre-paid fare media. Employers have a choice among several programs that are part of Metro Commute Services. Two of these programs include MTA Annual Transit Access Pass (A-TAP) and Metro Business Transit Access Pass (B-TAP). A-TAP allows employers to buy and distribute annual transit passes to employees who take transit. B-TAP allows employers to purchase annual transit passes at a discounted group rate for all worksite employees. Another program for employers is Metro Mail. Through Metro Mail employers can encourage transit use by ordering monthly passes for employees. Employers also have the option of requesting a weekly pass for newly hired employees. In addition to directly encouraging transit use, participating in any of these programs also makes employers eligible to participate in Metro Rewards and the Regional Guaranteed Ride Home.

d) Group College Pass Program: MTA provides transit passes at discounted group rates for colleges in Los Angeles County to distribute at a discounted price to students.

e) Commuter Benefits: Federal IRS tax code 132 (f), has tax breaks available for subsidizing transit and vanpooling for employees. Participating employers can offer pre-tax dollars to employees who ride transit or join a vanpool. Once a year MTA holds a workshop with employers to encourage and help them implement this program. The Commuter Benefits program was recently expanded to include benefits for employees that bicycle to work

- Bicycle Facilities and Other Non-motorized Transportation

The City of Hawthorne's Bicycle Transportation Plan shows existing and proposed bike ways along major arterials and corridors within and around DHSP area. The City has recently installed a Class II Bike Lane to segments of Hawthorne Blvd.

The City has worked closely with Los Angeles County to coordinate with the Los Angeles County Bicycle Master Plan. Most recently, the City has designed bicycle corridors and facilities as part of two new major capital improvement projects.
These include a Class II Bike Lane to Hawthorne Blvd. between El Segundo Blvd. and Rosecrans Avenue, and a Class III Bike route between Imperial Hwy. and El Segundo Blvd. An additional stretch of Class III bike lane will be extended along Imperial Highway from Hawthorne Blvd. to the City's western boundary at Inglewood Ave. This will result in a bike corridor that stretches the entire north-south axis of the City of Hawthorne.

The second bicycle corridor improvement will be along El Segundo Blvd, from Crenshaw Blvd. to Hawthorne Blvd. and then to the City's western boundary at El Segundo Blvd and the I-405 Freeway. This will connect with the Hawthorne Blvd. Bike Lane to create a network of over four miles of bicycle corridors throughout Hawthorne. These corridors will allow total bicycle access through the City of

Hawthorne in all four cardinal directions. These projects will increase bicycle ridership and are an essential component of the City's efforts to increase overall multi-modal transportation opportunities.

The City can use many other types of lanes, roadway markings, and intersection treatments to make the bicycle network more safe, comfortable, and convenient. Some of these bicycle facilities are described below:

a) Bicycle Path:

Bicycle paths are off-street paved bikeways. They are separated from vehicle traffic, but may be shared with pedestrians.

b) Bicycle Lane:

Bicycle lanes are marked on-street lanes for bicycle travel. Those riding in a bike lane should always be aware of driveways, mixing zones, car doors and vehicles such as taxis or paratransit that may temporarily occupy the lane.

c) Separated Bikeway:

Separated bikeways are bicycle facilities that are separated from traffic by parked cars, safe-hit posts, or painted buffer zones. Always be considerate of slower-moving bicyclists.

d) Shared Lane:

Shared lanes are typically wide travel lanes shared by bicyclists and vehicles. They are commonly marked with sharrows and signs. Those riding a bike should make sure to stay out of car's door zone.

e) Green Bike lane:

Enhanced green bike lanes and other green road treatments are meant to guide bicyclists, increase visibility, and alert motorists of bicycle facilities.

f) Sharrows:

Sharrows, or Shared Roadway Bicycle Markings, are placed outside the door zone in shared lanes to show both bicyclists and motorists where bicyclists should ride and assist with wayfinding.

g) Greenback Sharrows:

Greenback sharrows are there to guide bicyclists through intersections. Those riding bikes should follow them carefully across turning lanes or through mixing zones.

h) Dashed Green Bicycle Lanes:

Dashed green bicycle lanes indicate areas where cars and bicycles merge. Those driving cars and riding a bike should go slow, watch out and share the road.

- Wayfinding Signage to Transit Stations, Bus Stops and Parking Facilities

  An integrated system of wayfinding signage along major streets in the downtown areas for transit stations, bus stops, parking facilities, shopping centers, civic centers, community centers, public parks and libraries, other attraction facilities can help commuters and area visitors who are less familiar with the surroundings find their destinations easily without additional travel needs along adjacent streets. This can greatly reduce traffic congestion and delays through major intersections.

- Outlet Mall Shuttle Service to and from Metro Green Line Station

  The City of Hawthorne is located along major regional bus routes as well as is adjacent to the Metro Green Line along I-105 Freeway. A Metro Green Line station is located at Hawthorne Blvd. A well-managed shuttle service will provide commuters options for multi-modal transportation to avoid use of personal automobiles.

- Transportation Demand Management (TDM) at large Non-residential Developments

  The County of Los Angeles' 2010 Congestion Management Program (CMP) Transportation Demand Management (TDM) ordinance (adopted by all 88 cities in the County, including the City of Hawthorne) requires all new non-residential developments in excess of 25,000 square feet to implement on-site programs to reduce drive-alone trips and encourage alternate modes of transportation. The measures required for projects exceeding 25,000 square feet but less than 50,000 square feet include providing an on-site transportation information area. Therefore, the project will be required to implement TDM measures in the form of a transportation information area as a part of project development. The information area should be located where the greatest number of employees are likely to see it, and it should include: a bulletin board, display case or kiosk displaying transportation information, e.g.

  a) Current maps, routes and schedule for public transit routes serving the site

  b) Telephone numbers of referrals on transportation information, including numbers for the regional ridesharing agency and local transit operators

  c) Ridesharing promotional material supplied by commuter-oriented organizations

  d) Bicycle route and facility information, including regional/local bicycle maps and bicycle safety information

  e) A listing of facilities available for carpoolers, vanpoolers, bicyclists, transit riders and pedestrians at the site.

Measures required for projects exceeding 50,000 square feet but less than 100,000 square feet include providing an on-site transportation information area, and the following:

a) Preferential Carpool/Vanpool Parking

b) Parking Designed to Admit Vanpools, and

c) Bicycle Parking

Measures required for projects exceeding 100,000 square feet include providing an on-site transportation information area, preferential carpool/vanpool parking, parking designed to admit vanpools, bicycle parking, and the following:

a) Carpool/Vanpool Loading Zones

b) Efficient Pedestrian Access

c) Bus Stop Improvements, and

d) Safe Bike Access from Street to Bicycle Parking

Additionally, all residential and non-residential projects subject to EIR are required to conduct a transit review for the site in order to encourage residents and patrons to take full advantage of available transit services.

(Reference: 2010 Congestion Management Program for Los Angeles County, published by Metropolitan Transportation Authority, Chapter 4 – Transportation Demand Management Element)

TECHNICAL APPENDIX

EXISTING INTERSECTION CONFIGURATION AND TRAFFIC COUNTS

TECHNICAL APPENDIX

EXISTING TRAFFIC COUNTS

EXISTING INTERSECTION CONFIGURATION AND PEAK PERIOD TRAFFIC COUNTS

PRAIRIE AVENUE AND 120TH STREET

CITY TRAFFIC COUNTERS

626.991.7522

www.ctcounters.com

File Name : 120_Prairie_Wed
Site Code : 00000000
Start Date : 2/18/2015
Page No : 1

Groups Printed- Unshifted

	Prairie Ave Southbound			120th St Westbound			Prairie Ave Northbound			120th St Eastbound			
Start Time	Left	Thru	Right	Left	Thru	Right	Left	Thru	Right	Left	Thru	Right	Int. Total
07:00 AM	11	128	14	21	89	16	38	215	91	17	71	14	725
07:15 AM	10	161	31	26	118	17	35	238	88	19	87	17	847
07:30 AM	12	199	42	24	160	18	54	252	82	20	76	32	971
07:45 AM	15	249	58	40	145	18	53	261	68	21	110	36	1074
Total	48	737	145	111	512	69	180	966	329	77	344	99	3617
08:00 AM	18	240	44	36	146	22	64	235	81	28	99	49	1062
08:15 AM	21	224	46	45	158	11	51	245	76	24	81	24	1006
08:30 AM	16	174	35	21	103	17	60	248	70	20	107	24	895
08:45 AM	12	170	34	27	95	20	35	210	63	36	81	29	812
Total	67	808	159	129	502	70	210	938	290	108	368	126	3775
04:00 PM	51	193	20	39	69	12	43	199	86	31	233	42	1018
04:15 PM	42	201	24	43	66	15	23	195	73	28	249	41	1000
04:30 PM	47	234	19	39	92	9	31	185	65	19	249	43	1032
04:45 PM	60	239	20	51	77	16	34	172	96	27	259	32	1083
Total	200	867	83	172	304	52	131	751	320	105	990	158	4133
05:00 PM	58	246	26	54	77	30	38	189	83	22	233	25	1081
05:15 PM	55	275	35	38	109	18	38	221	106	22	255	21	1193
05:30 PM	56	289	25	43	82	13	45	185	73	19	267	22	1119
05:45 PM	64	258	16	49	87	24	48	206	92	28	234	34	1140
Total	233	1068	102	184	355	85	169	801	354	91	989	102	4533
Grand Total	548	3480	489	596	1673	276	690	3456	1293	381	2691	485	16058
Apprch %	12.1	77	10.8	23.4	65.7	10.8	12.7	63.5	23.8	10.7	75.7	13.6	
Total %	3.4	21.7	3	3.7	10.4	1.7	4.3	21.5	8.1	2.4	16.8	3	

CITY TRAFFIC COUNTERS
626.991.7522
www.ctcounters.com

File Name : 120_Prairie_Wed
Site Code : 00000000
Start Date : 2/18/2015
Page No : 2

	Prairie Ave Southbound				120th St Westbound				Prairie Ave Northbound				120th St Eastbound				
Start Time	Left	Thru	Right	App. Total	Left	Thru	Right	App. Total	Left	Thru	Right	App. Total	Left	Thru	Right	App. Total	Int. Total
Peak Hour Analysis From 07:00 AM to 11:45 AM - Peak 1 of 1																	
Peak Hour for Entire Intersection Begins at 07:30 AM																	
07:30 AM	12	199	42	253	24	**160**	18	202	54	252	**82**	**388**	20	76	32	128	971
07:45 AM	15	**249**	**58**	**322**	40	145	18	203	53	**261**	68	382	21	**110**	36	167	**1074**
08:00 AM	18	240	44	302	36	146	**22**	204	**64**	235	81	380	**28**	99	**49**	**176**	1062
08:15 AM	**21**	224	46	291	**45**	158	11	**214**	51	245	76	372	24	81	24	129	1006
Total Volume	66	912	190	1168	145	609	69	823	222	993	307	1522	93	366	141	600	4113
% App. Total	5.7	78.1	16.3		17.6	74	8.4		14.6	65.2	20.2		15.5	61	23.5		
PHF	.786	.916	.819	.907	.806	.952	.784	.961	.867	.951	.936	.981	.830	.832	.719	.852	.957

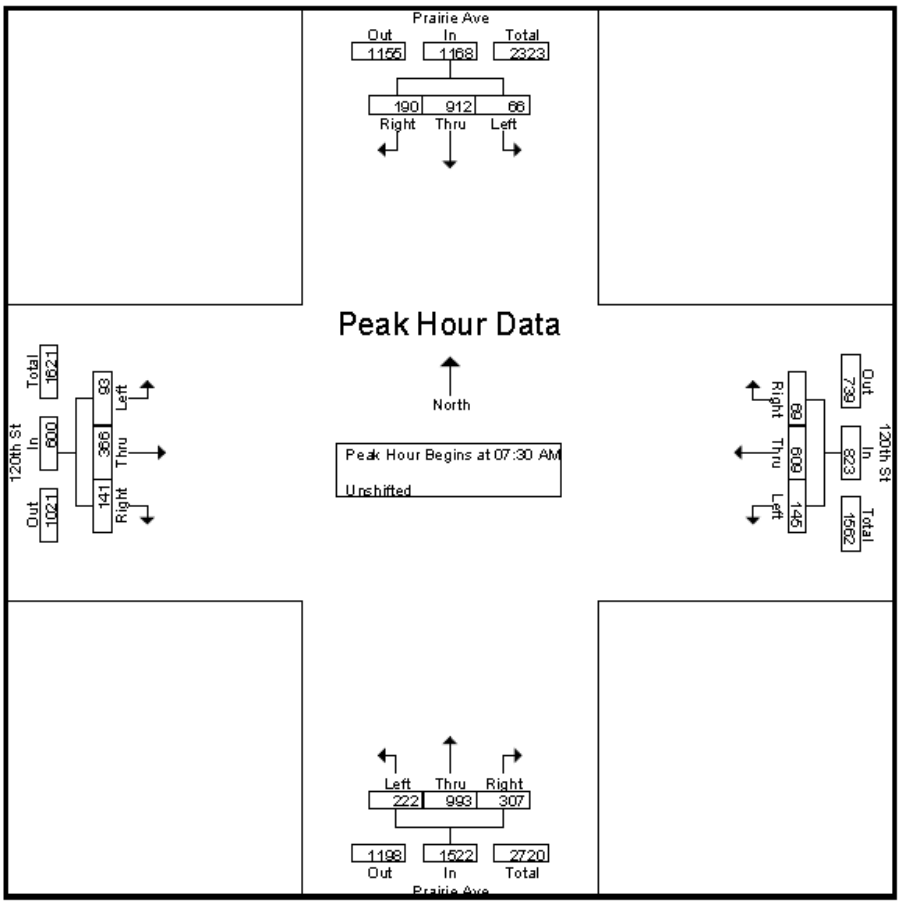

CITY TRAFFIC COUNTERS
626.991.7522
www.ctcounters.com

File Name : 120_Prairie_Wed
Site Code : 00000000
Start Date : 2/18/2015
Page No : 3

	Prairie Ave Southbound				120th St Westbound				Prairie Ave Northbound				120th St Eastbound				
Start Time	Left	Thru	Right	App. Total	Left	Thru	Right	App. Total	Left	Thru	Right	App. Total	Left	Thru	Right	App. Total	Int. Total
Peak Hour Analysis From 12:00 PM to 05:45 PM - Peak 1 of 1																	
Peak Hour for Entire Intersection Begins at 05:00 PM																	
05:00 PM	58	246	26	330	**54**	77	**30**	161	38	189	83	310	22	233	25	280	1081
05:15 PM	55	275	**35**	365	38	**109**	18	**165**	38	**221**	**106**	**365**	22	255	21	298	**1193**
05:30 PM	56	**289**	25	**370**	43	82	13	138	45	185	73	303	19	**267**	22	**308**	1119
05:45 PM	**64**	258	16	338	49	87	24	160	**48**	206	92	346	**28**	234	**34**	296	1140
Total Volume	233	1068	102	1403	184	355	85	624	169	801	354	1324	91	989	102	1182	4533
% App. Total	16.6	76.1	7.3		29.5	56.9	13.6		12.8	60.5	26.7		7.7	83.7	8.6		
PHF	.910	.924	.729	.948	.852	.814	.708	.945	.880	.906	.835	.907	.813	.926	.750	.959	.950

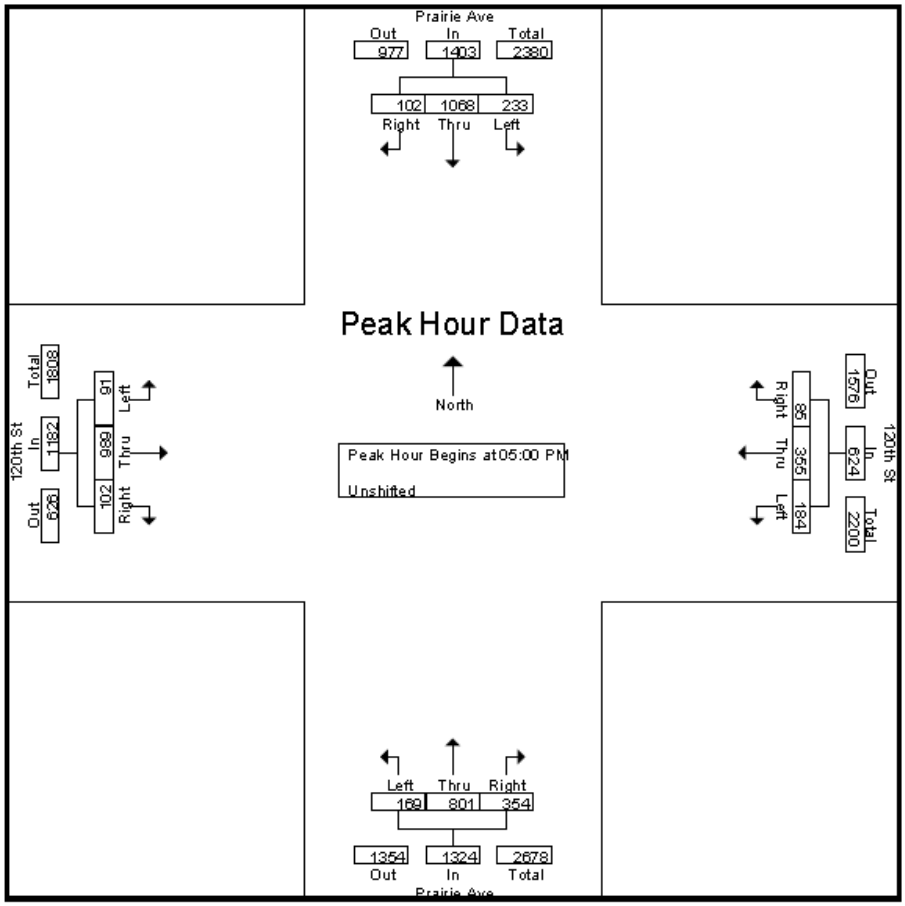

CITY TRAFFIC COUNTERS
626.991.7522
www.ctcounters.com

File Name : 120_Prairie
Site Code : 00000000
Start Date : 2/14/2015
Page No : 1

Groups Printed- Unshifted

	Prairie Ave Southbound			120th St Westbound			Prairie Ave Northbound			120th St Eastbound			
Start Time	Left	Thru	Right	Left	Thru	Right	Left	Thru	Right	Left	Thru	Right	Int. Total
11:00 AM	13	179	31	33	58	17	26	190	71	27	88	18	751
11:15 AM	19	189	17	33	70	19	28	177	65	27	90	18	752
11:30 AM	20	200	23	38	63	16	20	208	63	41	75	25	792
11:45 AM	12	205	20	37	53	11	29	217	67	18	99	16	784
Total	64	773	91	141	244	63	103	792	266	113	352	77	3079
12:00 PM	21	210	22	38	54	18	20	219	54	27	80	20	783
12:15 PM	23	221	22	54	68	21	21	223	59	17	108	25	862
12:30 PM	29	198	21	45	83	16	23	212	71	25	89	17	829
12:45 PM	21	159	23	42	62	10	33	193	61	19	107	19	749
Total	94	788	88	179	267	65	97	847	245	88	384	81	3223
Grand Total	158	1561	179	320	511	128	200	1639	511	201	736	158	6302
Apprch %	8.3	82.2	9.4	33.4	53.3	13.3	8.5	69.7	21.7	18.4	67.2	14.4	
Total %	2.5	24.8	2.8	5.1	8.1	2	3.2	26	8.1	3.2	11.7	2.5	

CITY TRAFFIC COUNTERS

626.991.7522

www.ctcounters.com

File Name : 120_Prairie
Site Code : 00000000
Start Date : 2/14/2015
Page No : 2

	Prairie Ave Southbound				120th St Westbound				Prairie Ave Northbound				120th St Eastbound				
Start Time	Left	Thru	Right	App. Total	Left	Thru	Right	App. Total	Left	Thru	Right	App. Total	Left	Thru	Right	App. Total	Int. Total
Peak Hour Analysis From 11:00 AM to 12:45 PM - Peak 1 of 1																	
Peak Hour for Entire Intersection Begins at 11:45 AM																	
11:45 AM	12	205	20	237	37	53	11	101	**29**	217	67	**313**	18	99	16	133	784
12:00 PM	21	210	**22**	253	38	54	18	110	20	219	54	293	**27**	80	20	127	783
12:15 PM	23	**221**	22	**266**	**54**	68	**21**	143	21	**223**	59	303	17	**108**	**25**	**150**	**862**
12:30 PM	**29**	198	21	248	45	**83**	16	**144**	23	212	**71**	306	25	89	17	131	829
Total Volume	85	834	85	1004	174	258	66	498	93	871	251	1215	87	376	78	541	3258
% App. Total	8.5	83.1	8.5		34.9	51.8	13.3		7.7	71.7	20.7		16.1	69.5	14.4		
PHF	.733	.943	.966	.944	.806	.777	.786	.865	.802	.976	.884	.970	.806	.870	.780	.902	.945

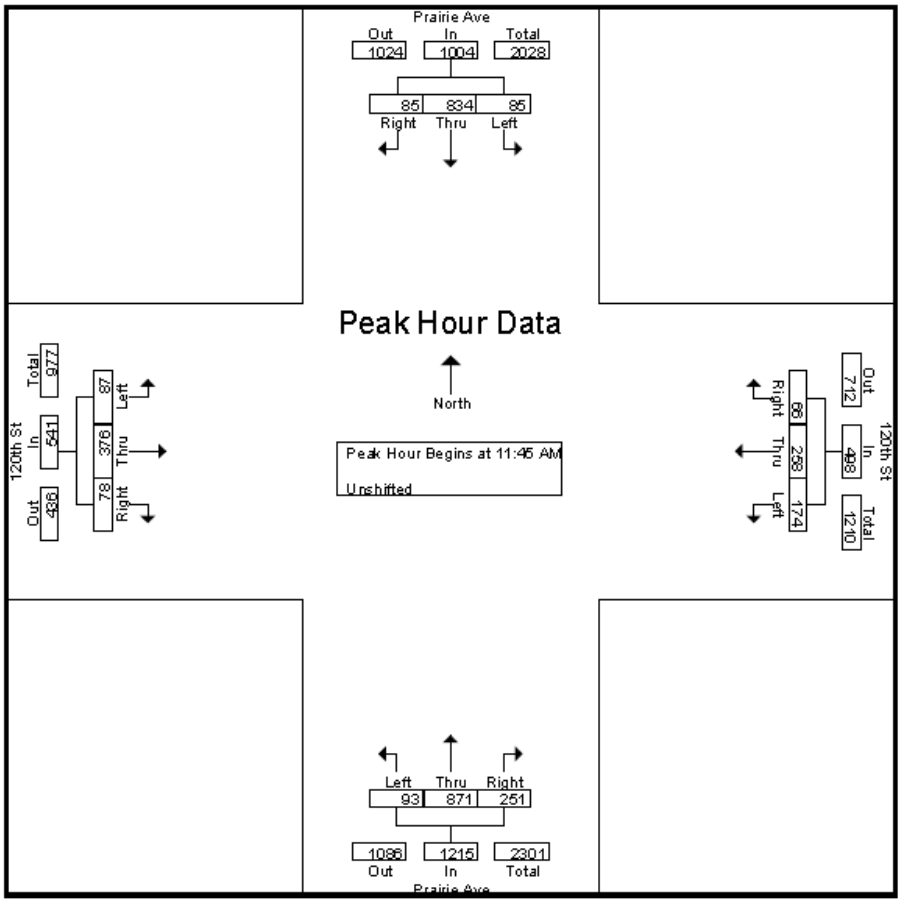

HAWTHORNE BOULEVARD AND 120TH STREET

CITY TRAFFIC COUNTERS

626.991.7522

www.ctcounters.com

File Name : 120th_Hawthorne
Site Code : 00000000
Start Date : 2/18/2015
Page No : 1

Groups Printed- Unshifted

	Hawthorne Blvd Southbound			120th St Westbound			Hawthorne Blvd Northbound			120th St Eastbound			
Start Time	Left	Thru	Right	Left	Thru	Right	Left	Thru	Right	Left	Thru	Right	Int. Total
07:00 AM	14	69	20	13	86	21	14	114	19	11	62	11	454
07:15 AM	17	98	25	16	150	24	15	146	14	12	67	11	595
07:30 AM	28	108	33	19	175	38	22	177	23	17	85	18	743
07:45 AM	18	144	30	26	244	35	42	190	28	12	109	5	883
Total	77	419	108	74	655	118	93	627	84	52	323	45	2675
08:00 AM	37	157	29	21	206	39	44	180	39	10	85	26	873
08:15 AM	35	134	34	23	215	42	53	174	16	19	92	34	871
08:30 AM	28	155	27	28	144	34	46	200	27	24	109	17	839
08:45 AM	25	168	26	33	120	44	22	149	18	11	80	14	710
Total	125	614	116	105	685	159	165	703	100	64	366	91	3293
04:00 PM	57	213	45	36	83	45	25	219	24	16	211	26	1000
04:15 PM	51	251	25	23	72	31	18	206	28	12	249	25	991
04:30 PM	57	246	32	35	82	59	19	184	26	19	243	31	1033
04:45 PM	55	257	26	20	90	45	16	225	39	26	222	28	1049
Total	220	967	128	114	327	180	78	834	117	73	925	110	4073
05:00 PM	67	282	43	27	105	64	26	195	39	18	253	38	1157
05:15 PM	76	291	27	25	77	51	17	223	26	24	241	19	1097
05:30 PM	48	248	30	33	101	45	23	203	32	21	289	19	1092
05:45 PM	63	260	36	38	91	45	26	217	28	20	236	27	1087
Total	254	1081	136	123	374	205	92	838	125	83	1019	103	4433
Grand Total	676	3081	488	416	2041	662	428	3002	426	272	2633	349	14474
Apprch %	15.9	72.6	11.5	13.3	65.4	21.2	11.1	77.9	11	8.4	80.9	10.7	
Total %	4.7	21.3	3.4	2.9	14.1	4.6	3	20.7	2.9	1.9	18.2	2.4	

CITY TRAFFIC COUNTERS
626.991.7522
www.ctcounters.com

File Name : 120th_Hawthorne
Site Code : 00000000
Start Date : 2/18/2015
Page No : 2

	Hawthorne Blvd Southbound				120th St Westbound				Hawthorne Blvd Northbound				120th St Eastbound				
Start Time	Left	Thru	Right	App. Total	Left	Thru	Right	App. Total	Left	Thru	Right	App. Total	Left	Thru	Right	App. Total	Int. Total
Peak Hour Analysis From 07:00 AM to 11:45 AM - Peak 1 of 1																	
Peak Hour for Entire Intersection Begins at 07:45 AM																	
07:45 AM	18	144	30	192	26	**244**	35	**305**	42	190	28	260	12	**109**	5	126	**883**
08:00 AM	**37**	**157**	29	**223**	21	206	39	266	44	180	**39**	263	10	85	26	121	873
08:15 AM	35	134	**34**	203	23	215	**42**	280	**53**	174	16	243	19	92	**34**	145	871
08:30 AM	28	155	27	210	**28**	144	34	206	46	**200**	27	**273**	**24**	109	17	**150**	839
Total Volume	118	590	120	828	98	809	150	1057	185	744	110	1039	65	395	82	542	3466
% App. Total	14.3	71.3	14.5		9.3	76.5	14.2		17.8	71.6	10.6		12	72.9	15.1		
PHF	.797	.939	.882	.928	.875	.829	.893	.866	.873	.930	.705	.951	.677	.906	.603	.903	.981

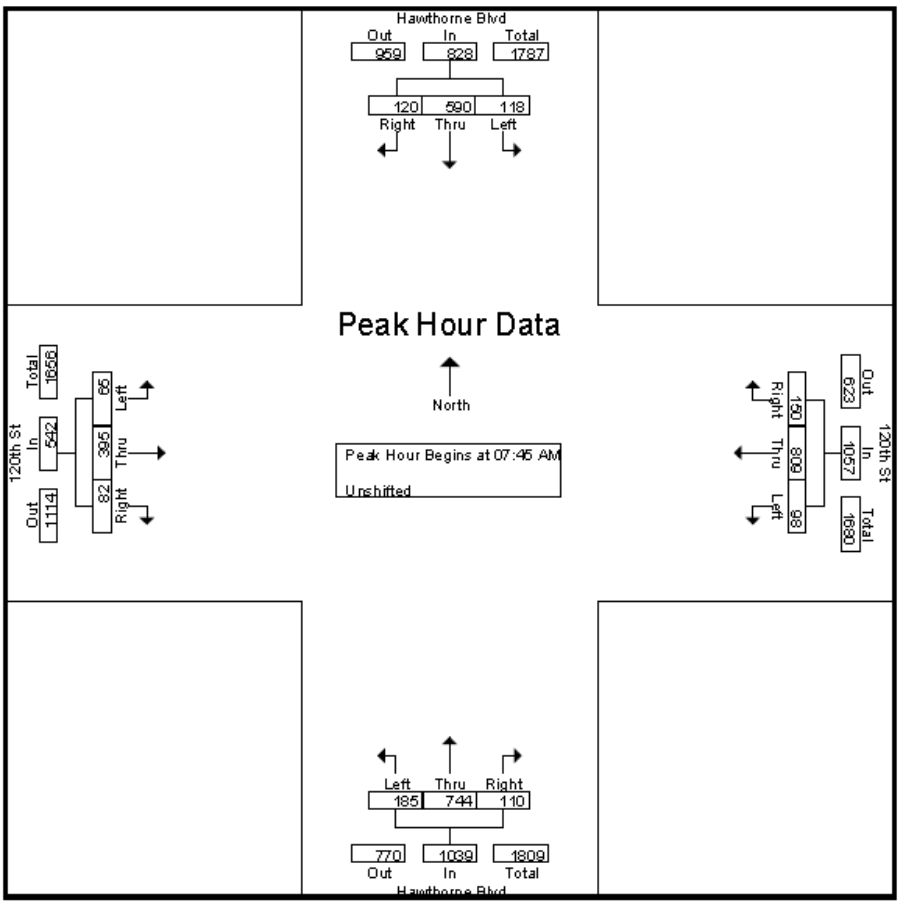

CITY TRAFFIC COUNTERS
626.991.7522
www.ctcounters.com

File Name : 120th_Hawthorne
Site Code : 00000000
Start Date : 2/18/2015
Page No : 3

	Hawthorne Blvd Southbound				120th St Westbound				Hawthorne Blvd Northbound				120th St Eastbound				
Start Time	Left	Thru	Right	App. Total	Left	Thru	Right	App. Total	Left	Thru	Right	App. Total	Left	Thru	Right	App. Total	Int. Total
Peak Hour Analysis From 12:00 PM to 05:45 PM - Peak 1 of 1																	
Peak Hour for Entire Intersection Begins at 05:00 PM																	
05:00 PM	67	282	**43**	392	27	**105**	**64**	**196**	**26**	195	**39**	260	18	253	**38**	309	**1157**
05:15 PM	**76**	**291**	27	**394**	25	77	51	153	17	**223**	26	266	**24**	241	19	284	1097
05:30 PM	48	248	30	326	33	101	45	179	23	203	32	258	21	**289**	19	**329**	1092
05:45 PM	63	260	36	359	**38**	91	45	174	26	217	28	**271**	20	236	27	283	1087
Total Volume	254	1081	136	1471	123	374	205	702	92	838	125	1055	83	1019	103	1205	4433
% App. Total	17.3	73.5	9.2		17.5	53.3	29.2		8.7	79.4	11.8		6.9	84.6	8.5		
PHF	.836	.929	.791	.933	.809	.890	.801	.895	.885	.939	.801	.973	.865	.881	.678	.916	.958

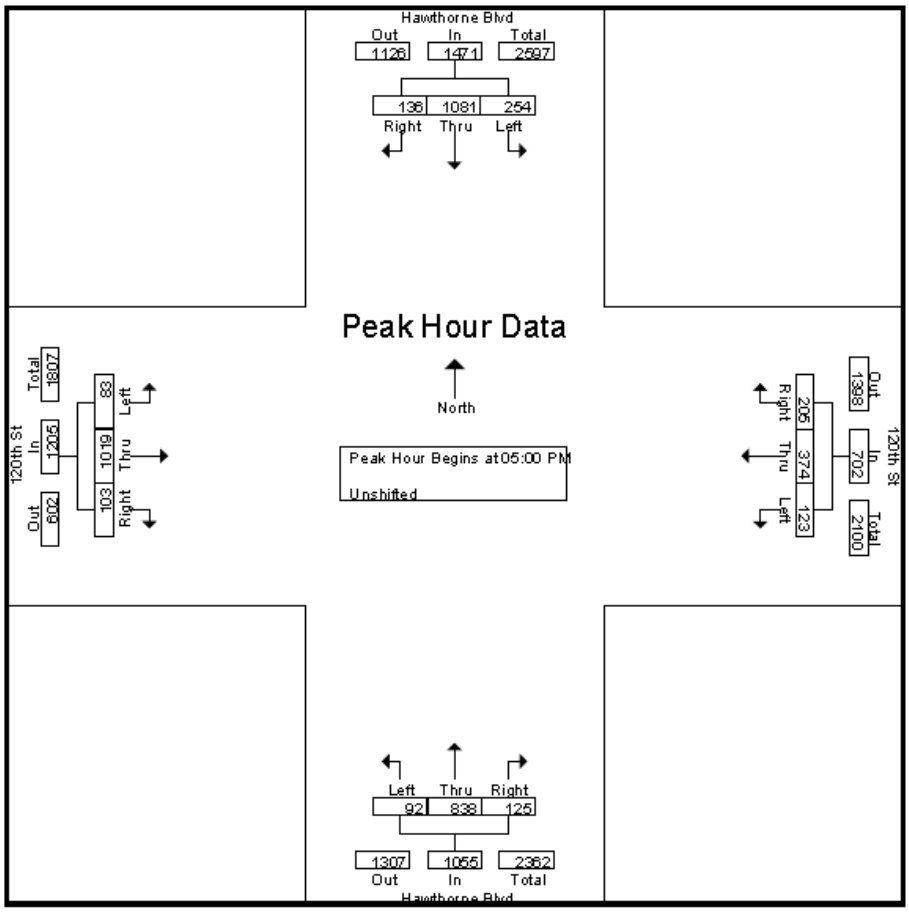

CITY TRAFFIC COUNTERS

626.991.7522

www.ctcounters.com

File Name : 120_Hawthorne
Site Code : 00000000
Start Date : 2/14/2015
Page No : 1

Groups Printed- Unshifted

	Hawthorne Blvd Southbound			120th St Westbound			Hawthorne Blvd Northbound			120th St Eastbound			
Start Time	Left	Thru	Right	Left	Thru	Right	Left	Thru	Right	Left	Thru	Right	Int. Total
11:00 AM	25	216	20	42	46	24	27	178	33	25	73	31	740
11:15 AM	35	249	21	18	59	27	22	233	28	24	72	25	813
11:30 AM	35	208	16	41	56	32	36	241	38	27	79	28	837
11:45 AM	38	219	24	19	44	27	32	261	38	23	50	18	793
Total	133	892	81	120	205	110	117	913	137	99	274	102	3183
12:00 PM	22	205	25	36	59	20	34	259	36	27	70	22	815
12:15 PM	37	212	21	35	43	26	37	253	28	27	69	22	810
12:30 PM	22	233	23	41	65	28	28	251	31	37	80	29	868
12:45 PM	50	221	32	33	71	24	36	238	41	20	74	21	861
Total	131	871	101	145	238	98	135	1001	136	111	293	94	3354
Grand Total	264	1763	182	265	443	208	252	1914	273	210	567	196	6537
Apprch %	12	79.8	8.2	28.9	48.4	22.7	10.3	78.5	11.2	21.6	58.3	20.1	
Total %	4	27	2.8	4.1	6.8	3.2	3.9	29.3	4.2	3.2	8.7	3	

CITY TRAFFIC COUNTERS

626.991.7522

www.ctcounters.com

File Name : 120_Hawthorne
Site Code : 00000000
Start Date : 2/14/2015
Page No : 2

	Hawthorne Blvd Southbound				120th St Westbound				Hawthorne Blvd Northbound				120th St Eastbound				
Start Time	Left	Thru	Right	App. Total	Left	Thru	Right	App. Total	Left	Thru	Right	App. Total	Left	Thru	Right	App. Total	Int. Total
Peak Hour Analysis From 11:00 AM to 12:45 PM - Peak 1 of 1																	
Peak Hour for Entire Intersection Begins at 12:00 PM																	
12:00 PM	22	205	25	252	36	59	20	115	34	**259**	36	**329**	27	70	22	119	815
12:15 PM	37	212	21	270	35	43	26	104	**37**	253	28	318	27	69	22	118	810
12:30 PM	22	**233**	23	278	**41**	65	**28**	**134**	28	251	31	310	**37**	**80**	**29**	**146**	**868**
12:45 PM	**50**	221	**32**	**303**	33	**71**	24	128	36	238	**41**	315	20	74	21	115	861
Total Volume	131	871	101	1103	145	238	98	481	135	1001	136	1272	111	293	94	498	3354
% App. Total	11.9	79	9.2		30.1	49.5	20.4		10.6	78.7	10.7		22.3	58.8	18.9		
PHF	.655	.935	.789	.910	.884	.838	.875	.897	.912	.966	.829	.967	.750	.916	.810	.853	.966

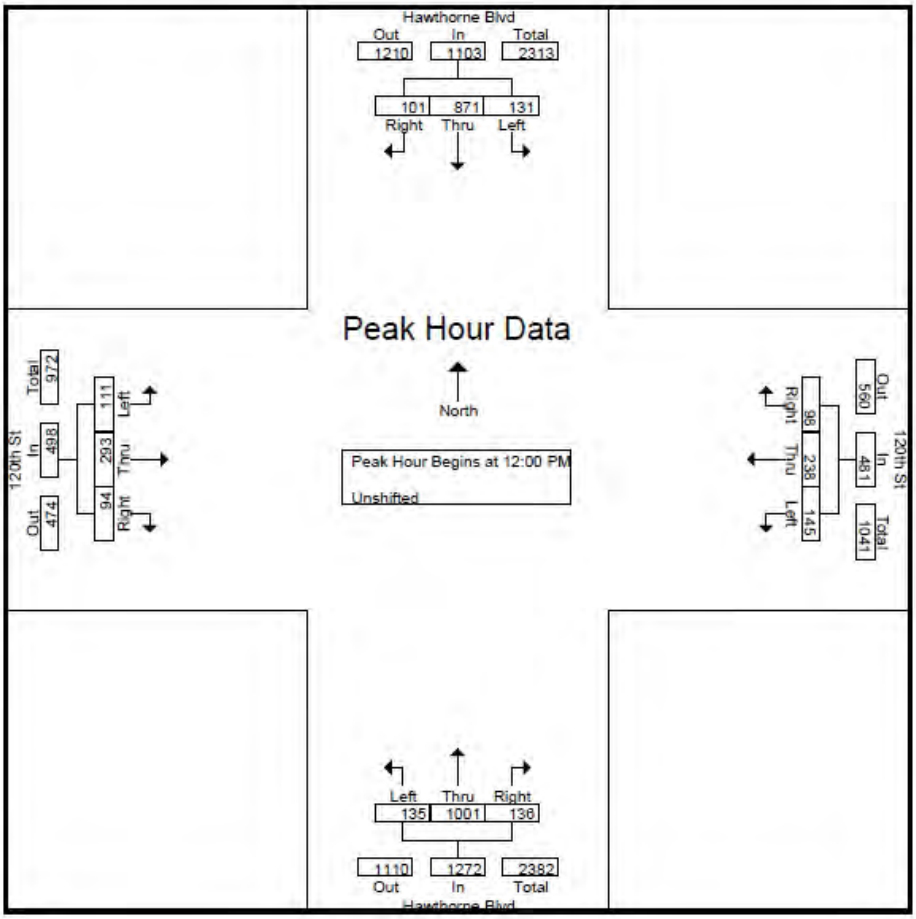

INGLEWOOD AVENUE AND 120TH STREET

CITY TRAFFIC COUNTERS

626.991.7522

www.ctcounters.com

File Name : 120th_Inglewood_Wed
Site Code : 00000000
Start Date : 2/18/2015
Page No : 1

Groups Printed- Unshifted

	Inglewood Ave Southbound			120th St Westbound			Inglewood Ave Northbound			120th St Eastbound			
Start Time	Left	Thru	Right	Left	Thru	Right	Left	Thru	Right	Left	Thru	Right	Int. Total
07:00 AM	8	68	7	33	92	20	22	88	18	8	43	14	421
07:15 AM	12	91	15	32	117	32	29	107	12	3	34	7	491
07:30 AM	14	138	15	46	155	23	19	116	25	12	47	14	624
07:45 AM	29	141	16	29	177	18	29	111	35	8	67	11	671
Total	63	438	53	140	541	93	99	422	90	31	191	46	2207
08:00 AM	33	156	18	32	156	25	28	148	23	13	82	13	727
08:15 AM	28	139	17	35	145	37	38	148	34	15	76	15	727
08:30 AM	14	115	11	50	137	26	35	151	43	18	71	17	688
08:45 AM	6	154	16	39	104	22	35	137	32	7	69	13	634
Total	81	564	62	156	542	110	136	584	132	53	298	58	2776
04:00 PM	23	143	8	22	54	29	7	104	46	14	257	38	745
04:15 PM	20	149	3	16	45	20	3	106	47	14	266	54	743
04:30 PM	15	148	4	20	45	21	9	143	44	7	247	75	778
04:45 PM	30	147	7	18	45	16	11	132	45	9	235	58	753
Total	88	587	22	76	189	86	30	485	182	44	1005	225	3019
05:00 PM	32	173	9	22	69	32	17	125	45	14	277	35	850
05:15 PM	50	172	7	18	63	25	10	149	58	11	234	39	836
05:30 PM	35	178	11	20	75	23	11	138	43	9	274	47	864
05:45 PM	43	207	3	18	69	25	11	121	54	10	208	55	824
Total	160	730	30	78	276	105	49	533	200	44	993	176	3374
Grand Total	392	2319	167	450	1548	394	314	2024	604	172	2487	505	11376
Apprch %	13.6	80.6	5.8	18.8	64.7	16.5	10.7	68.8	20.5	5.4	78.6	16	
Total %	3.4	20.4	1.5	4	13.6	3.5	2.8	17.8	5.3	1.5	21.9	4.4	

CITY TRAFFIC COUNTERS
626.991.7522
www.ctcounters.com

File Name : 120th_Inglewood_Wed
Site Code : 00000000
Start Date : 2/18/2015
Page No : 2

	Inglewood Ave Southbound				120th St Westbound				Inglewood Ave Northbound				120th St Eastbound				
Start Time	Left	Thru	Right	App. Total	Left	Thru	Right	App. Total	Left	Thru	Right	App. Total	Left	Thru	Right	App. Total	Int. Total
Peak Hour Analysis From 07:00 AM to 11:45 AM - Peak 1 of 1																	
Peak Hour for Entire Intersection Begins at 07:45 AM																	
07:45 AM	29	141	16	186	29	**177**	18	**224**	29	111	35	175	8	67	11	86	671
08:00 AM	**33**	**156**	**18**	**207**	32	156	25	213	28	148	23	199	13	**82**	13	**108**	**727**
08:15 AM	28	139	17	184	35	145	**37**	217	**38**	148	34	220	15	76	15	106	727
08:30 AM	14	115	11	140	**50**	137	26	213	35	**151**	**43**	**229**	**18**	71	**17**	106	688
Total Volume	104	551	62	717	146	615	106	867	130	558	135	823	54	296	56	406	2813
% App. Total	14.5	76.8	8.6		16.8	70.9	12.2		15.8	67.8	16.4		13.3	72.9	13.8		
PHF	.788	.883	.861	.866	.730	.869	.716	.968	.855	.924	.785	.898	.750	.902	.824	.940	.967

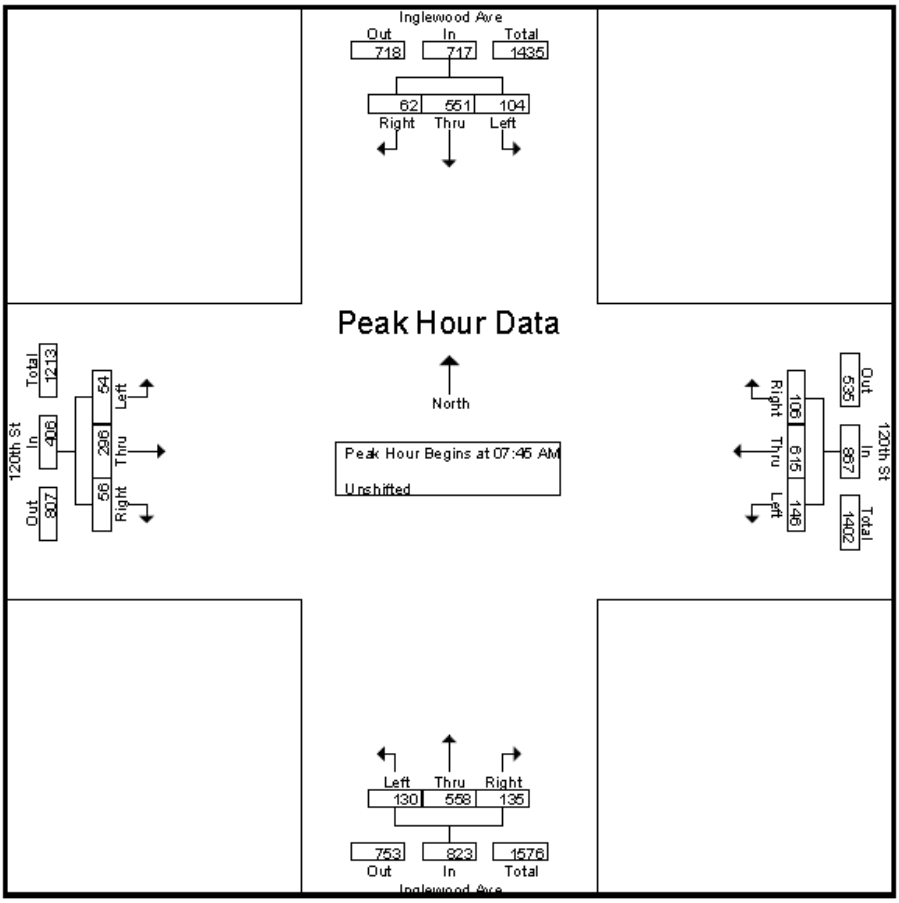

CITY TRAFFIC COUNTERS
626.991.7522
www.ctcounters.com

File Name : 120th_Inglewood_Wed
Site Code : 00000000
Start Date : 2/18/2015
Page No : 3

	Inglewood Ave Southbound				120th St Westbound				Inglewood Ave Northbound				120th St Eastbound				
Start Time	Left	Thru	Right	App. Total	Left	Thru	Right	App. Total	Left	Thru	Right	App. Total	Left	Thru	Right	App. Total	Int. Total
Peak Hour Analysis From 12:00 PM to 05:45 PM - Peak 1 of 1																	
Peak Hour for Entire Intersection Begins at 05:00 PM																	
05:00 PM	32	173	9	214	**22**	69	**32**	**123**	**17**	125	45	187	**14**	**277**	35	326	850
05:15 PM	**50**	172	7	229	18	63	25	106	10	**149**	**58**	**217**	11	234	39	284	836
05:30 PM	35	178	**11**	224	20	**75**	23	118	11	138	43	192	9	274	47	**330**	**864**
05:45 PM	43	**207**	3	**253**	18	69	25	112	11	121	54	186	10	208	**55**	273	824
Total Volume	160	730	30	920	78	276	105	459	49	533	200	782	44	993	176	1213	3374
% App. Total	17.4	79.3	3.3		17	60.1	22.9		6.3	68.2	25.6		3.6	81.9	14.5		
PHF	.800	.882	.682	.909	.886	.920	.820	.933	.721	.894	.862	.901	.786	.896	.800	.919	.976

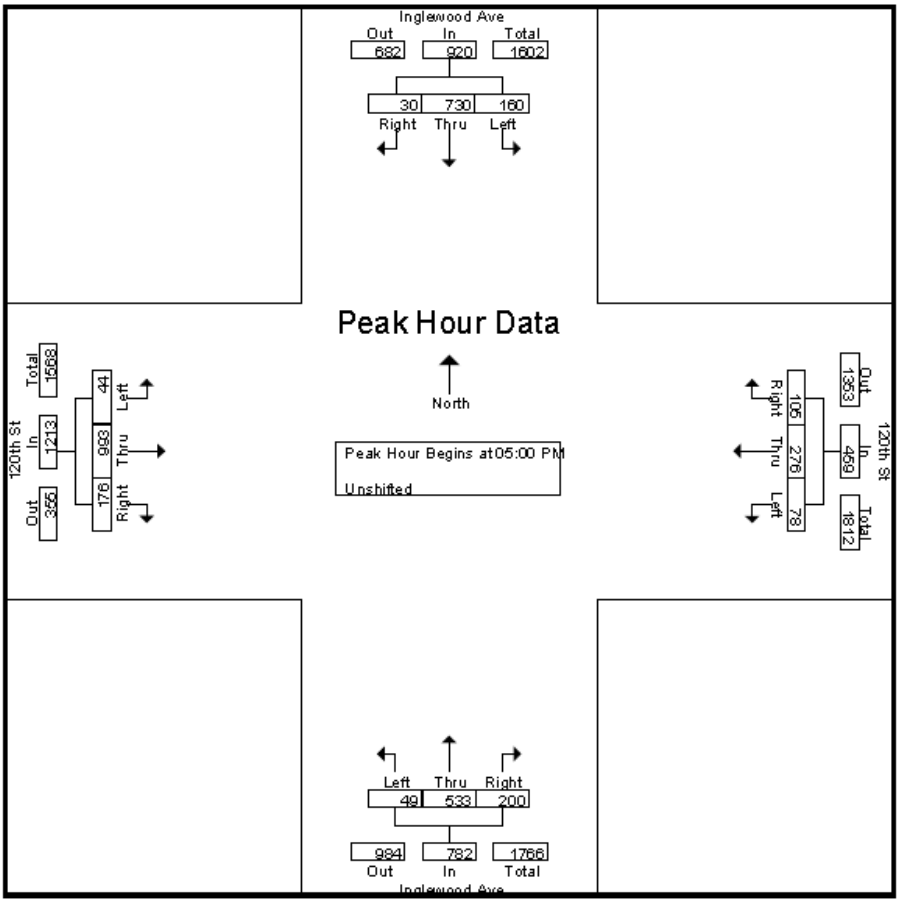

CITY TRAFFIC COUNTERS

626.991.7522

www.ctcounters.com

File Name : 120_Inglewood
Site Code : 00000000
Start Date : 2/14/2015
Page No : 1

Groups Printed- Unshifted

	Inglewood Ave Southbound			120th St Westbound			Inglewood Ave Northbound			120th St Eastbound			
Start Time	Left	Thru	Right	Left	Thru	Right	Left	Thru	Right	Left	Thru	Right	Int. Total
10:00 AM	15	97	7	41	37	10	7	138	18	7	42	9	428
10:15 AM	16	108	5	32	48	17	16	157	20	7	55	13	494
10:30 AM	29	87	10	25	45	20	18	191	23	8	49	11	516
10:45 AM	15	119	9	31	37	20	11	208	26	10	51	8	545
Total	75	411	31	129	167	67	52	694	87	32	197	41	1983
11:00 AM	26	122	10	33	38	32	16	195	31	14	53	14	584
11:15 AM	20	111	14	34	56	18	7	184	25	9	42	20	540
11:30 AM	16	132	4	49	43	20	10	167	21	9	70	7	548
11:45 AM	19	141	8	34	53	27	10	142	23	9	78	17	561
Total	81	506	36	150	190	97	43	688	100	41	243	58	2233
Grand Total	156	917	67	279	357	164	95	1382	187	73	440	99	4216
Apprch %	13.7	80.4	5.9	34.9	44.6	20.5	5.7	83.1	11.2	11.9	71.9	16.2	
Total %	3.7	21.8	1.6	6.6	8.5	3.9	2.3	32.8	4.4	1.7	10.4	2.3	

CITY TRAFFIC COUNTERS

626.991.7522

www.ctcounters.com

File Name : 120_Inglewood
Site Code : 00000000
Start Date : 2/14/2015
Page No : 2

	Inglewood Ave Southbound				120th St Westbound				Inglewood Ave Northbound				120th St Eastbound				
Start Time	Left	Thru	Right	App. Total	Left	Thru	Right	App. Total	Left	Thru	Right	App. Total	Left	Thru	Right	App. Total	Int. Total
Peak Hour Analysis From 10:00 AM to 11:45 AM - Peak 1 of 1																	
Peak Hour for Entire Intersection Begins at 11:00 AM																	
11:00 AM	**26**	122	10	158	33	38	**32**	103	**16**	**195**	**31**	**242**	**14**	53	14	81	**584**
11:15 AM	20	111	**14**	145	34	**56**	18	108	7	184	25	216	9	42	**20**	71	540
11:30 AM	16	132	4	152	**49**	43	20	112	10	167	21	198	9	70	7	86	548
11:45 AM	19	**141**	8	**168**	34	53	27	**114**	10	142	23	175	9	**78**	17	**104**	561
Total Volume	81	506	36	623	150	190	97	437	43	688	100	831	41	243	58	342	2233
% App. Total	13	81.2	5.8		34.3	43.5	22.2		5.2	82.8	12		12	71.1	17		
PHF	.779	.897	.643	.927	.765	.848	.758	.958	.672	.882	.806	.858	.732	.779	.725	.822	.956

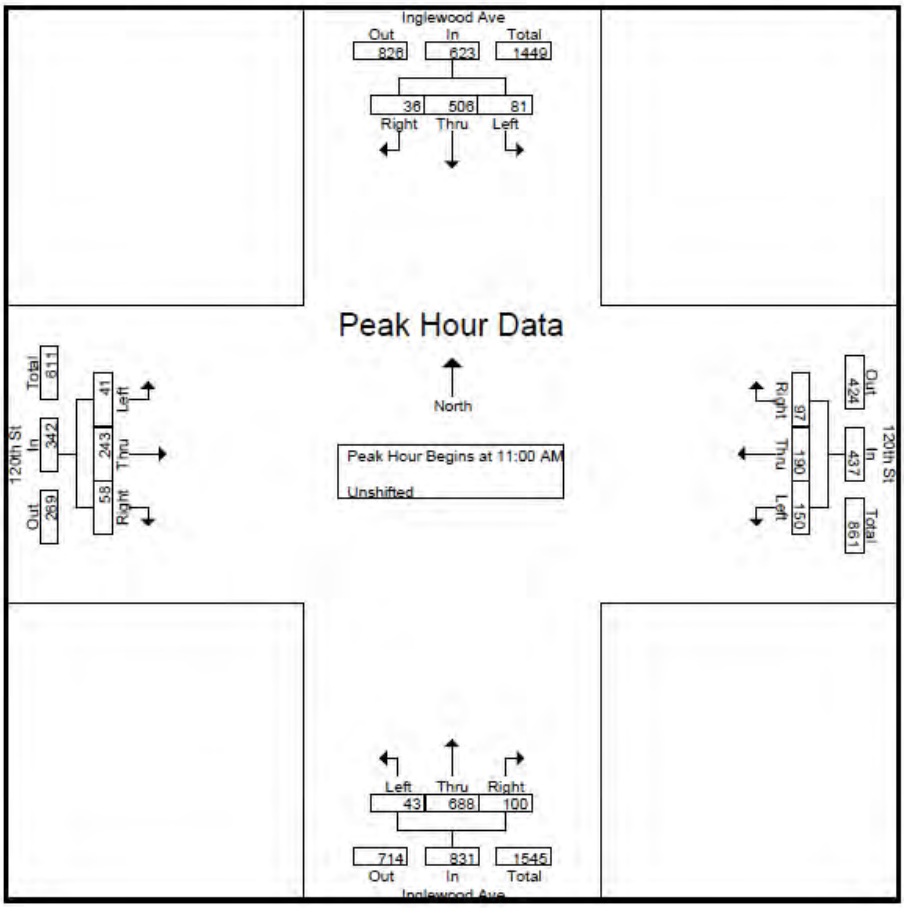

HAWTHORNE BOULEVARD AND LENNOX BOULEVARD

CITY TRAFFIC COUNTERS

626.991.7522

www.ctcounters.com

File Name : Hawthorne_Lennox
Site Code : 00000000
Start Date : 2/18/2015
Page No : 1

Groups Printed- Unshifted

	Hawthorne Blvd Southbound			Lennox Blvd Westbound			Hawthorne Blvd Northbound			Lennox Blvd Eastbound			
Start Time	Left	Thru	Right	Left	Thru	Right	Left	Thru	Right	Left	Thru	Right	Int. Total
07:00 AM	13	123	9	18	53	16	35	125	11	11	32	28	474
07:15 AM	9	182	16	25	61	25	27	198	10	13	33	35	634
07:30 AM	22	177	16	42	100	25	67	237	22	33	63	31	835
07:45 AM	43	261	20	38	99	40	73	269	21	29	103	48	1044
Total	87	743	61	123	313	106	202	829	64	86	231	142	2987
08:00 AM	30	232	15	41	85	35	62	250	13	21	112	53	949
08:15 AM	36	218	13	40	67	24	56	249	20	31	97	31	882
08:30 AM	19	177	14	15	49	20	50	203	7	19	35	25	633
08:45 AM	15	212	19	22	42	13	37	223	11	20	43	21	678
Total	100	839	61	118	243	92	205	925	51	91	287	130	3142
04:00 PM	46	308	26	28	49	16	54	234	24	16	73	83	957
04:15 PM	36	237	12	11	41	22	76	247	26	28	96	77	909
04:30 PM	32	314	13	16	47	23	61	232	22	15	83	96	954
04:45 PM	32	349	20	15	42	12	51	259	20	24	112	89	1025
Total	146	1208	71	70	179	73	242	972	92	83	364	345	3845
05:00 PM	27	384	17	24	62	21	60	294	24	34	122	61	1130
05:15 PM	29	359	25	19	40	25	61	283	29	21	125	96	1112
05:30 PM	38	381	22	23	63	13	67	236	19	20	104	112	1098
05:45 PM	36	350	17	23	63	12	73	310	22	29	104	92	1131
Total	130	1474	81	89	228	71	261	1123	94	104	455	361	4471
Grand Total	463	4264	274	400	963	342	910	3849	301	364	1337	978	14445
Apprch %	9.3	85.3	5.5	23.5	56.5	20.1	18	76.1	5.9	13.6	49.9	36.5	
Total %	3.2	29.5	1.9	2.8	6.7	2.4	6.3	26.6	2.1	2.5	9.3	6.8	

CITY TRAFFIC COUNTERS

626.991.7522

www.ctcounters.com

File Name : Hawthorne_Lennox
Site Code : 00000000
Start Date : 2/18/2015
Page No : 2

	Hawthorne Blvd Southbound				Lennox Blvd Westbound				Hawthorne Blvd Northbound				Lennox Blvd Eastbound				
Start Time	Left	Thru	Right	App. Total	Left	Thru	Right	App. Total	Left	Thru	Right	App. Total	Left	Thru	Right	App. Total	Int. Total
Peak Hour Analysis From 07:00 AM to 11:45 AM - Peak 1 of 1																	
Peak Hour for Entire Intersection Begins at 07:30 AM																	
07:30 AM	22	177	16	215	**42**	**100**	25	167	67	237	**22**	326	**33**	63	31	127	835
07:45 AM	**43**	**261**	**20**	**324**	38	99	**40**	**177**	**73**	**269**	21	**363**	29	103	48	180	**1044**
08:00 AM	30	232	15	277	41	85	35	161	62	250	13	325	21	**112**	**53**	**186**	949
08:15 AM	36	218	13	267	40	67	24	131	56	249	20	325	31	97	31	159	882
Total Volume	131	888	64	1083	161	351	124	636	258	1005	76	1339	114	375	163	652	3710
% App. Total	12.1	82	5.9		25.3	55.2	19.5		19.3	75.1	5.7		17.5	57.5	25		
PHF	.762	.851	.800	.836	.958	.878	.775	.898	.884	.934	.864	.922	.864	.837	.769	.876	.888

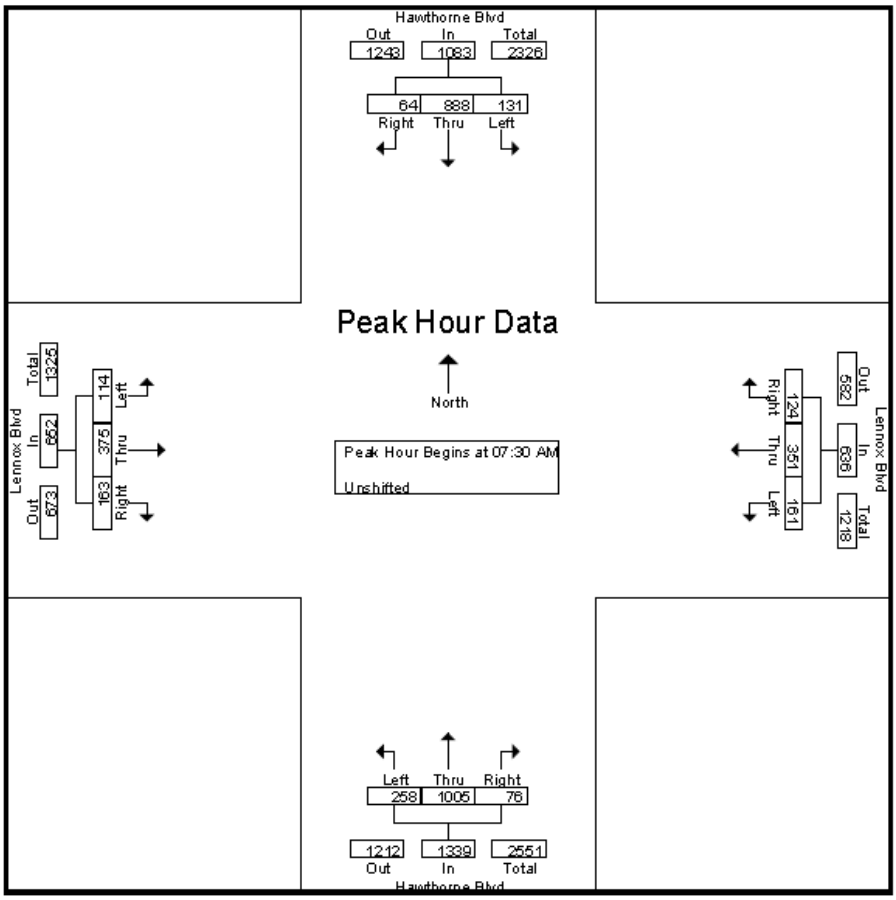

CITY TRAFFIC COUNTERS
626.991.7522
www.ctcounters.com

File Name : Hawthorne_Lennox
Site Code : 00000000
Start Date : 2/18/2015
Page No : 3

	Hawthorne Blvd Southbound				Lennox Blvd Westbound				Hawthorne Blvd Northbound				Lennox Blvd Eastbound				
Start Time	Left	Thru	Right	App. Total	Left	Thru	Right	App. Total	Left	Thru	Right	App. Total	Left	Thru	Right	App. Total	Int. Total
Peak Hour Analysis From 12:00 PM to 05:45 PM - Peak 1 of 1																	
Peak Hour for Entire Intersection Begins at 05:00 PM																	
05:00 PM	27	**384**	17	428	**24**	62	21	**107**	60	294	24	378	**34**	122	61	217	1130
05:15 PM	29	359	**25**	413	19	40	**25**	84	61	283	**29**	373	21	**125**	96	**242**	1112
05:30 PM	**38**	381	22	**441**	23	**63**	13	99	67	236	19	322	20	104	**112**	236	1098
05:45 PM	36	350	17	403	23	63	12	98	**73**	**310**	22	**405**	29	104	92	225	**1131**
Total Volume	130	1474	81	1685	89	228	71	388	261	1123	94	1478	104	455	361	920	4471
% App. Total	7.7	87.5	4.8		22.9	58.8	18.3		17.7	76	6.4		11.3	49.5	39.2		
PHF	.855	.960	.810	.955	.927	.905	.710	.907	.894	.906	.810	.912	.765	.910	.806	.950	.988

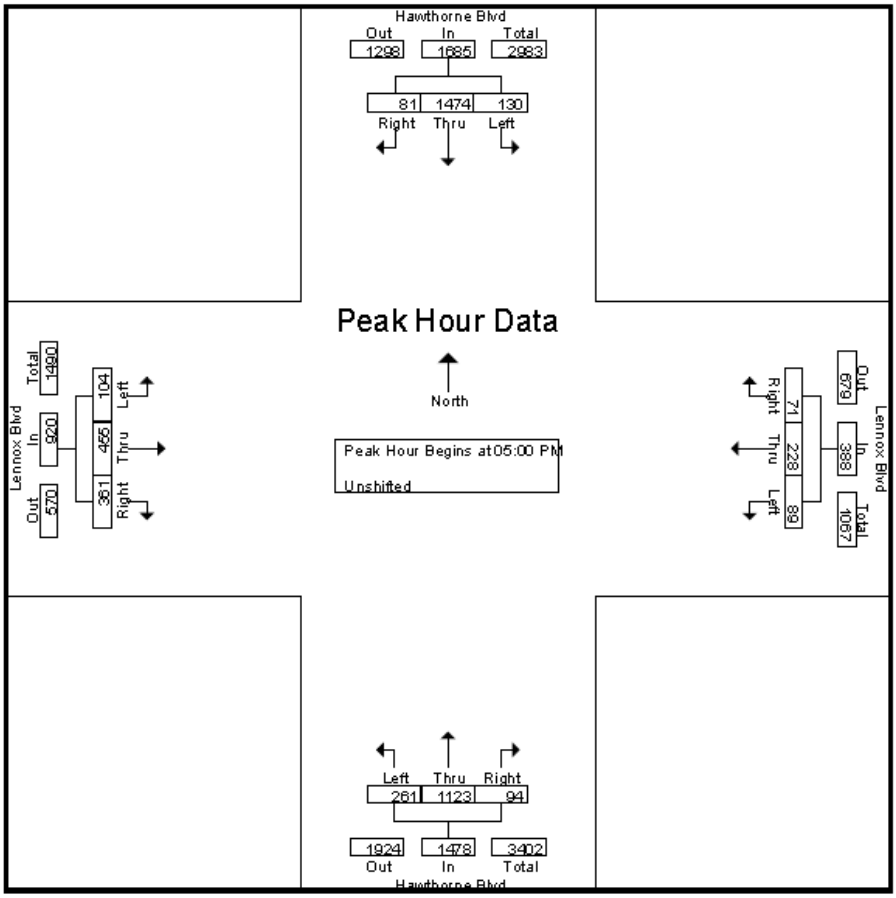

CITY TRAFFIC COUNTERS

626.991.7522

www.ctcounters.com

File Name : Lennox_Hawthorne
Site Code : 00000000
Start Date : 2/14/2015
Page No : 1

Groups Printed- Unshifted

	Hawthorne Blvd Southbound			Lennox Westbound			Hawthorne Blvd Northbound			Lennox Eastbound			
Start Time	Left	Thru	Right	Left	Thru	Right	Left	Thru	Right	Left	Thru	Right	Int. Total
11:00 AM	16	204	17	17	40	21	61	206	28	16	42	38	706
11:15 AM	30	199	20	23	44	19	44	204	22	27	53	30	715
11:30 AM	19	186	26	22	61	16	65	211	24	25	61	34	750
11:45 AM	25	201	13	19	39	30	68	220	23	28	48	23	737
Total	90	790	76	81	184	86	238	841	97	96	204	125	2908
12:00 PM	14	196	24	19	46	16	69	207	18	33	52	43	737
12:15 PM	23	232	25	17	41	28	66	234	25	19	61	46	817
12:30 PM	19	198	16	19	43	13	59	250	44	23	60	39	783
12:45 PM	27	233	11	35	49	19	59	188	29	21	63	42	776
Total	83	859	76	90	179	76	253	879	116	96	236	170	3113
Grand Total	173	1649	152	171	363	162	491	1720	213	192	440	295	6021
Apprch %	8.8	83.5	7.7	24.6	52.2	23.3	20.3	71	8.8	20.7	47.5	31.8	
Total %	2.9	27.4	2.5	2.8	6	2.7	8.2	28.6	3.5	3.2	7.3	4.9	

CITY TRAFFIC COUNTERS

626.991.7522

www.ctcounters.com

File Name : Lennox_Hawthorne
Site Code : 00000000
Start Date : 2/14/2015
Page No : 2

	Hawthorne Blvd Southbound				Lennox Westbound				Hawthorne Blvd Northbound				Lennox Eastbound				
Start Time	Left	Thru	Right	App. Total	Left	Thru	Right	App. Total	Left	Thru	Right	App. Total	Left	Thru	Right	App. Total	Int. Total
'eak Hour Analysis From 11:00 AM to 12:45 PM - Peak 1 of 1																	
'eak Hour for Entire Intersection Begins at 12:00 PM																	
12:00 PM	14	196	24	234	19	46	16	81	69	207	18	294	33	52	43	128	737
12:15 PM	23	232	25	280	17	41	28	86	66	234	25	325	19	61	46	126	817
12:30 PM	19	198	16	233	19	43	13	75	59	250	44	353	23	60	39	122	783
12:45 PM	27	233	11	271	35	49	19	103	59	188	29	276	21	63	42	126	776
Total Volume	83	859	76	1018	90	179	76	345	253	879	116	1248	96	236	170	502	3113
% App. Total	8.2	84.4	7.5		26.1	51.9	22		20.3	70.4	9.3		19.1	47	33.9		
PHF	.769	.922	.760	.909	.643	.913	.679	.837	.917	.879	.659	.884	.727	.937	.924	.980	.953

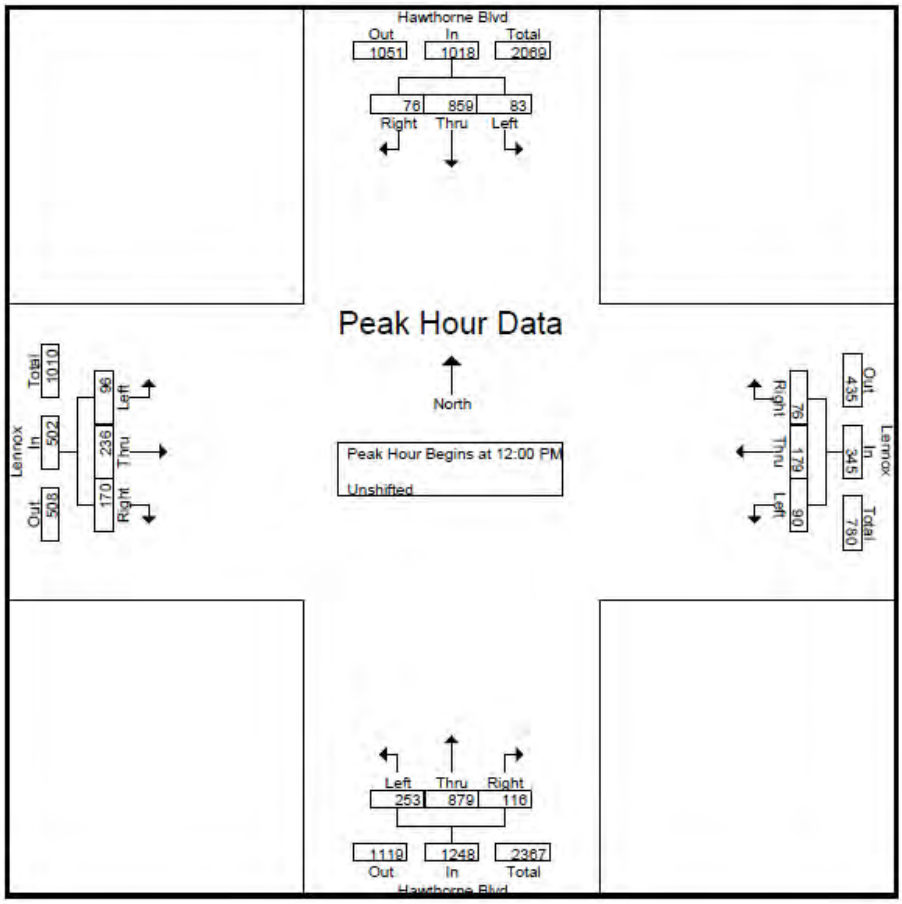

HAWTHORNE BOULEVARD AND MARINE AVENUE

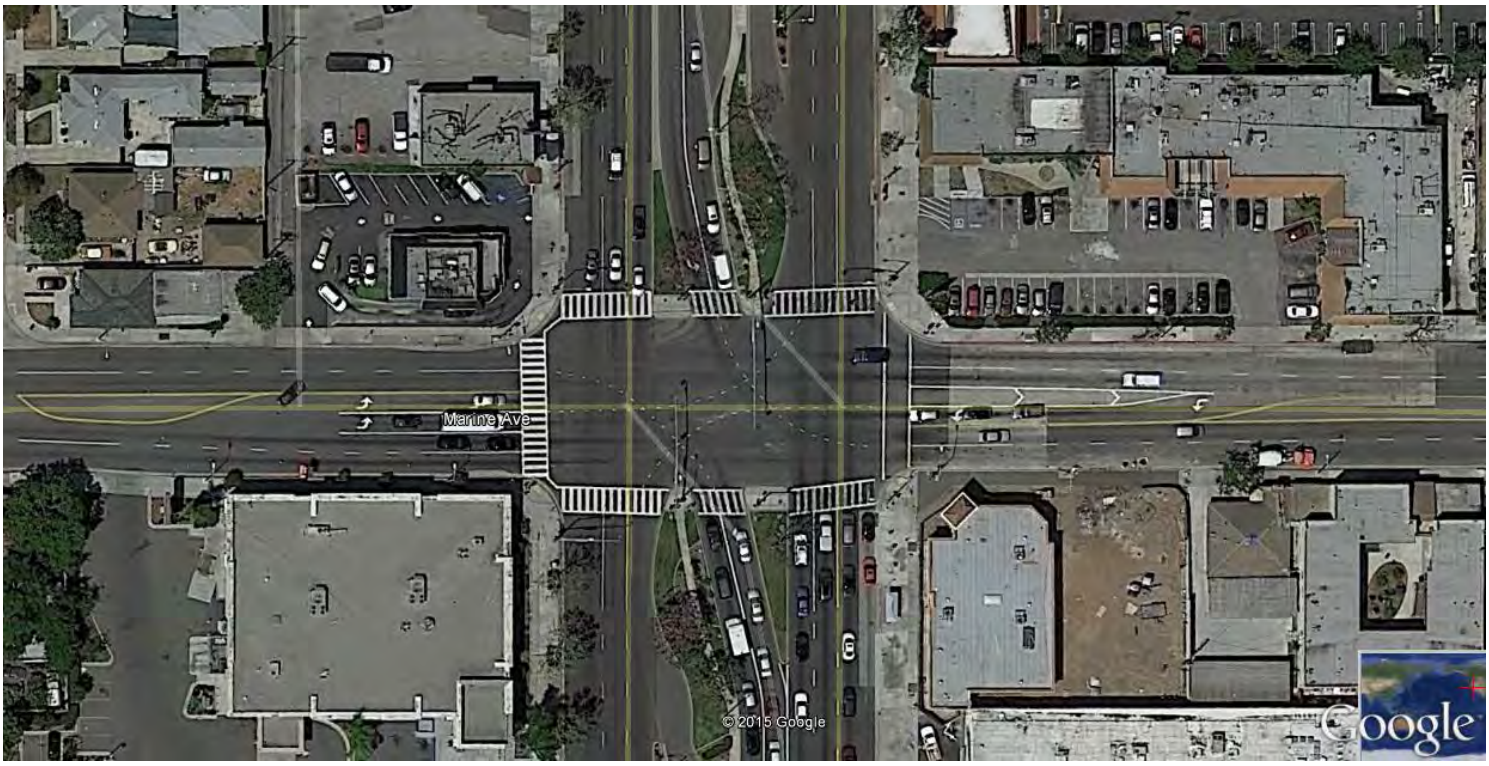

CITY TRAFFIC COUNTERS

626.991.7522

www.ctcounters.com

File Name : Marine_Hawthorne_Thurs
Site Code : 00000000
Start Date : 2/19/2015
Page No : 1

Groups Printed- Unshifted

	Hawthorne Blvd Southbound			Marine Ave Westbound			Hawthorne Blvd Northbound			Marine Ave Eastbound			
Start Time	Left	Thru	Right	Left	Thru	Right	Left	Thru	Right	Left	Thru	Right	Int. Total
07:00 AM	10	152	7	38	198	14	35	141	12	13	31	13	664
07:15 AM	19	172	4	43	209	19	44	166	16	22	43	14	771
07:30 AM	22	197	3	41	243	22	56	238	17	26	81	27	973
07:45 AM	28	222	9	46	214	25	53	230	18	52	124	43	1064
Total	79	743	23	168	864	80	188	775	63	113	279	97	3472
08:00 AM	36	174	6	59	210	26	71	221	27	35	81	20	966
08:15 AM	32	219	10	25	201	23	60	242	20	25	80	36	973
08:30 AM	34	208	11	55	196	27	71	263	25	16	58	22	986
08:45 AM	31	180	14	58	182	32	44	228	22	11	47	19	868
Total	133	781	41	197	789	108	246	954	94	87	266	97	3793
04:00 PM	55	256	13	45	102	26	41	246	46	20	163	27	1040
04:15 PM	64	267	15	31	105	19	46	314	41	26	161	28	1117
04:30 PM	50	223	17	45	109	28	40	270	41	32	182	9	1046
04:45 PM	46	319	26	27	104	32	46	267	44	27	175	35	1148
Total	215	1065	71	148	420	105	173	1097	172	105	681	99	4351
05:00 PM	66	305	21	53	106	19	38	241	36	33	180	29	1127
05:15 PM	52	305	16	40	113	19	51	317	51	21	172	23	1180
05:30 PM	62	316	18	47	138	17	51	254	56	22	183	42	1206
05:45 PM	48	322	20	36	122	17	55	303	46	24	162	31	1186
Total	228	1248	75	176	479	72	195	1115	189	100	697	125	4699
Grand Total	655	3837	210	689	2552	365	802	3941	518	405	1923	418	16315
Apprch %	13.9	81.6	4.5	19.1	70.8	10.1	15.2	74.9	9.8	14.7	70	15.2	
Total %	4	23.5	1.3	4.2	15.6	2.2	4.9	24.2	3.2	2.5	11.8	2.6	

CITY TRAFFIC COUNTERS
626.991.7522
www.ctcounters.com

File Name : Marine_Hawthorne_Thurs
Site Code : 00000000
Start Date : 2/19/2015
Page No : 2

	Hawthorne Blvd Southbound				Marine Ave Westbound				Hawthorne Blvd Northbound				Marine Ave Eastbound				
Start Time	Left	Thru	Right	App. Total	Left	Thru	Right	App. Total	Left	Thru	Right	App. Total	Left	Thru	Right	App. Total	Int. Total
Peak Hour Analysis From 07:00 AM to 11:45 AM - Peak 1 of 1																	
Peak Hour for Entire Intersection Begins at 07:45 AM																	
07:45 AM	28	**222**	9	259	46	**214**	25	285	53	230	18	301	**52**	**124**	**43**	**219**	**1064**
08:00 AM	**36**	174	6	216	**59**	210	26	**295**	**71**	221	**27**	319	35	81	20	136	966
08:15 AM	32	219	10	**261**	25	201	23	249	60	242	20	322	25	80	36	141	973
08:30 AM	34	208	**11**	253	55	196	**27**	278	71	**263**	25	**359**	16	58	22	96	986
Total Volume	130	823	36	989	185	821	101	1107	255	956	90	1301	128	343	121	592	3989
% App. Total	13.1	83.2	3.6		16.7	74.2	9.1		19.6	73.5	6.9		21.6	57.9	20.4		
PHF	.903	.927	.818	.947	.784	.959	.935	.938	.898	.909	.833	.906	.615	.692	.703	.676	.937

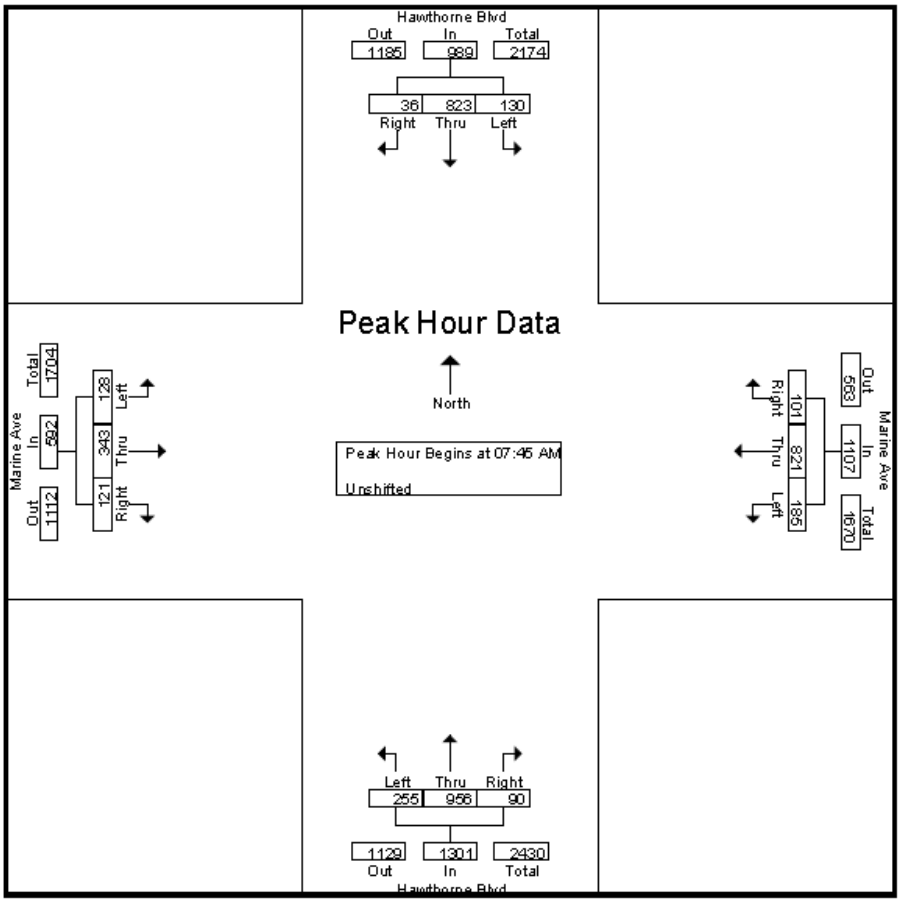

CITY TRAFFIC COUNTERS

626.991.7522

www.ctcounters.com

File Name : Marine_Hawthorne_Thurs
Site Code : 00000000
Start Date : 2/19/2015
Page No : 3

	Hawthorne Blvd Southbound				Marine Ave Westbound				Hawthorne Blvd Northbound				Marine Ave Eastbound				
Start Time	Left	Thru	Right	App. Total	Left	Thru	Right	App. Total	Left	Thru	Right	App. Total	Left	Thru	Right	App. Total	Int. Total
Peak Hour Analysis From 12:00 PM to 05:45 PM - Peak 1 of 1																	
Peak Hour for Entire Intersection Begins at 05:00 PM																	
05:00 PM	**66**	305	**21**	392	**53**	106	**19**	178	38	241	36	315	**33**	180	29	242	1127
05:15 PM	52	305	16	373	40	113	19	172	51	**317**	51	**419**	21	172	23	216	1180
05:30 PM	62	316	18	**396**	47	**138**	17	**202**	51	254	**56**	361	22	**183**	**42**	**247**	**1206**
05:45 PM	48	**322**	20	390	36	122	17	175	**55**	303	46	404	24	162	31	217	1186
Total Volume	228	1248	75	1551	176	479	72	727	195	1115	189	1499	100	697	125	922	4699
% App. Total	14.7	80.5	4.8		24.2	65.9	9.9		13	74.4	12.6		10.8	75.6	13.6		
PHF	.864	.969	.893	.979	.830	.868	.947	.900	.886	.879	.844	.894	.758	.952	.744	.933	.974

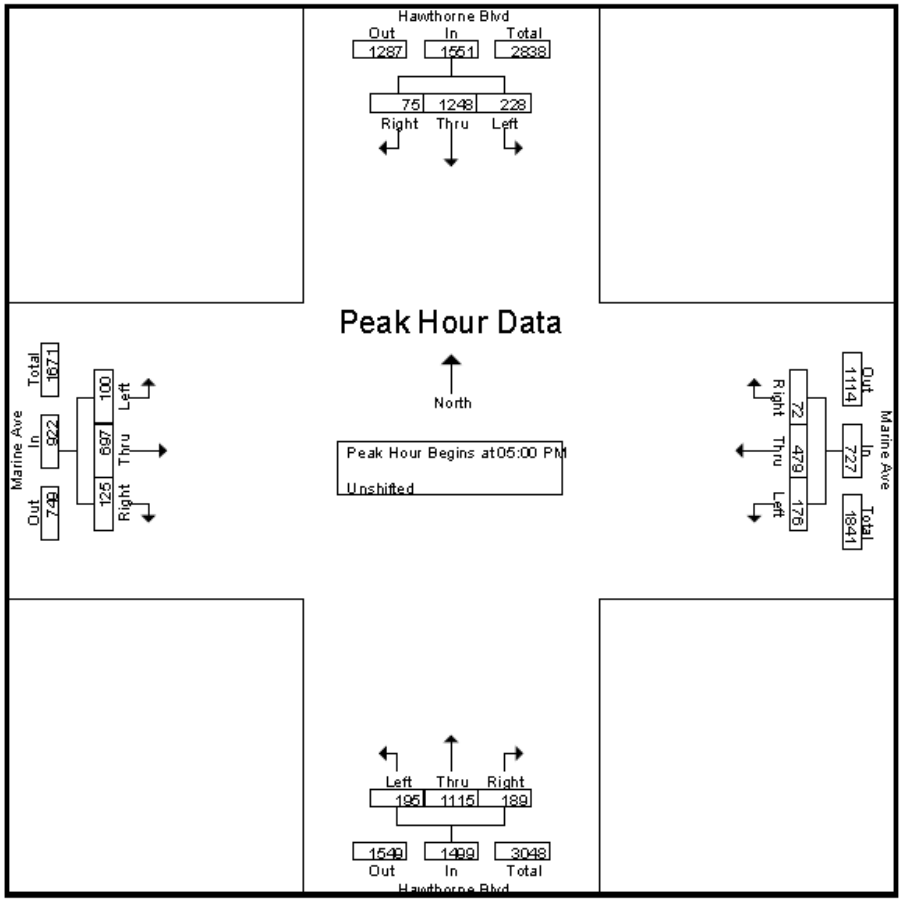

CITY TRAFFIC COUNTERS

626.991.7522

www.ctcounters.com

File Name : Hawthorne_Marine_Sat
Site Code : 00000000
Start Date : 2/21/2015
Page No : 1

Groups Printed- Unshifted

	Hawthorne Blvd Southbound			Marine Ave Westbound			Hawthorne Blvd Northbound			Marine Ave Eastbound			
Start Time	Left	Thru	Right	Left	Thru	Right	Left	Thru	Right	Left	Thru	Right	Int. Total
11:00 AM	29	206	17	57	117	25	34	187	41	18	84	22	837
11:15 AM	26	270	16	26	105	21	45	253	33	27	93	21	936
11:30 AM	31	185	13	40	136	31	45	204	40	31	109	32	897
11:45 AM	22	242	19	45	92	30	43	257	36	28	95	24	933
Total	108	903	65	168	450	107	167	901	150	104	381	99	3603
12:00 PM	32	215	21	47	135	33	45	211	28	25	120	32	944
12:15 PM	30	296	20	39	93	20	41	277	26	33	89	30	994
12:30 PM	46	222	19	48	118	24	46	240	48	37	137	28	1013
12:45 PM	16	272	19	43	130	18	40	281	39	25	114	26	1023
Total	124	1005	79	177	476	95	172	1009	141	120	460	116	3974
Grand Total	232	1908	144	345	926	202	339	1910	291	224	841	215	7577
Apprch %	10.2	83.5	6.3	23.4	62.9	13.7	13.3	75.2	11.5	17.5	65.7	16.8	
Total %	3.1	25.2	1.9	4.6	12.2	2.7	4.5	25.2	3.8	3	11.1	2.8	

CITY TRAFFIC COUNTERS

626.991.7522

www.ctcounters.com

File Name : Hawthorne_Marine_Sat
Site Code : 00000000
Start Date : 2/21/2015
Page No : 2

	Hawthorne Blvd Southbound				Marine Ave Westbound				Hawthorne Blvd Northbound				Marine Ave Eastbound				
Start Time	Left	Thru	Right	App. Total	Left	Thru	Right	App. Total	Left	Thru	Right	App. Total	Left	Thru	Right	App. Total	Int. Total
Peak Hour Analysis From 11:00 AM to 12:45 PM - Peak 1 of 1																	
Peak Hour for Entire Intersection Begins at 12:00 PM																	
12:00 PM	32	215	**21**	268	47	**135**	33	**215**	45	211	28	284	25	120	**32**	177	944
12:15 PM	30	**296**	20	**346**	39	93	20	152	41	277	26	344	33	89	30	152	994
12:30 PM	**46**	222	19	287	**48**	118	24	190	**46**	240	**48**	334	**37**	**137**	28	**202**	1013
12:45 PM	16	272	19	307	43	130	18	191	40	**281**	39	**360**	25	114	26	165	**1023**
Total Volume	124	1005	79	1208	177	476	95	748	172	1009	141	1322	120	460	116	696	3974
% App. Total	10.3	83.2	6.5		23.7	63.6	12.7		13	76.3	10.7		17.2	66.1	16.7		
PHF	.674	.849	.940	.873	.922	.881	.720	.870	.935	.898	.734	.918	.811	.839	.906	.861	.971

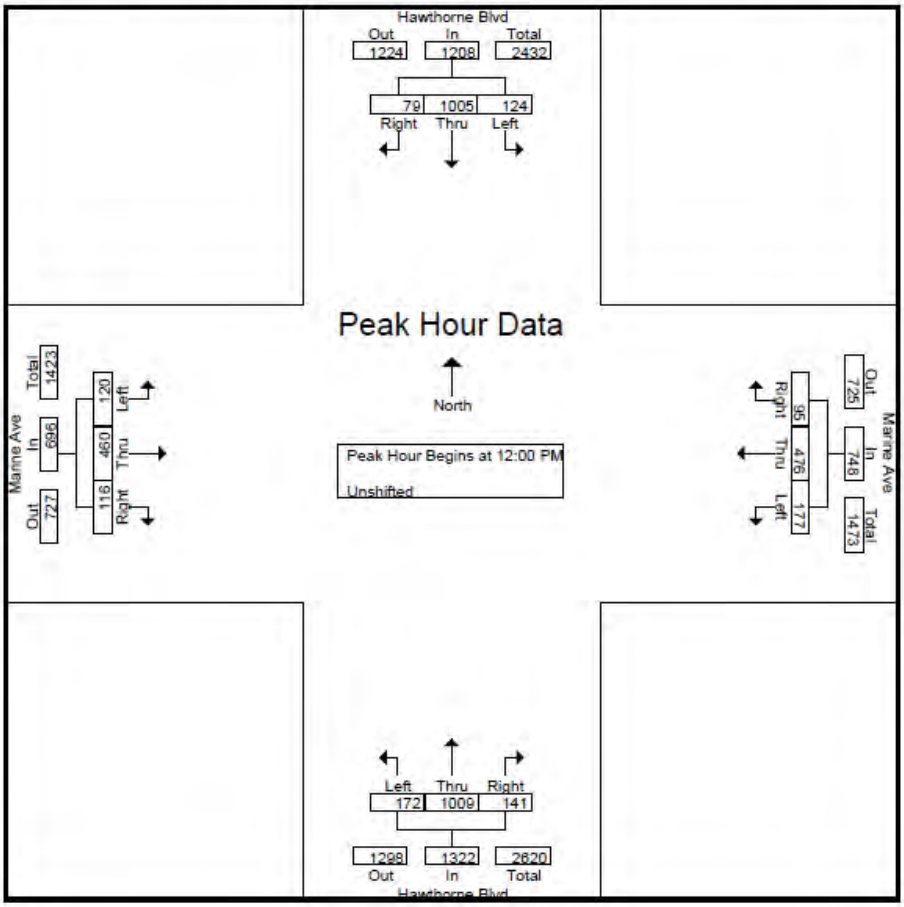

HAWTHORNE BOULEVARD AND 139TH STREET

CITY TRAFFIC COUNTERS

626.991.7522

www.ctcounters.com

File Name : 139th_Hawthorne_Thurs
Site Code : 00000000
Start Date : 2/19/2015
Page No : 1

Groups Printed- Unshifted

	Hawthorne Blvd Southbound			139th St Westbound			Hawthorne Blvd Northbound			139th St Eastbound			
Start Time	Left	Thru	Right	Left	Thru	Right	Left	Thru	Right	Left	Thru	Right	Int. Total
07:00 AM	7	180	0	6	0	5	0	155	4	0	0	0	357
07:15 AM	9	170	0	13	0	9	1	157	4	0	0	1	364
07:30 AM	7	204	0	22	0	6	0	145	5	0	0	0	389
07:45 AM	7	225	0	4	0	3	1	184	7	0	0	0	431
Total	30	779	0	45	0	23	2	641	20	0	0	1	1541
08:00 AM	33	227	0	7	0	7	0	284	4	0	0	0	562
08:15 AM	11	224	0	5	0	15	0	223	1	0	0	0	479
08:30 AM	10	254	0	26	1	6	6	255	3	1	0	0	562
08:45 AM	9	223	0	6	0	2	0	269	8	1	0	0	518
Total	63	928	0	44	1	30	6	1031	16	2	0	0	2121
04:00 PM	17	234	0	8	0	5	2	201	4	0	1	0	472
04:15 PM	25	247	0	3	0	7	2	240	15	0	0	0	539
04:30 PM	17	263	0	6	0	1	2	264	7	0	0	0	560
04:45 PM	15	280	0	4	0	5	1	248	5	0	0	0	558
Total	74	1024	0	21	0	18	7	953	31	0	1	0	2129
05:00 PM	17	333	0	0	0	0	0	281	3	0	0	0	634
05:15 PM	12	346	0	2	0	1	1	336	10	0	0	0	708
05:30 PM	26	336	0	4	0	0	0	308	8	0	0	0	682
05:45 PM	16	365	0	0	0	0	1	316	8	0	0	0	706
Total	71	1380	0	6	0	1	2	1241	29	0	0	0	2730
Grand Total	238	4111	0	116	1	72	17	3866	96	2	1	1	8521
Apprch %	5.5	94.5	0	61.4	0.5	38.1	0.4	97.2	2.4	50	25	25	
Total %	2.8	48.2	0	1.4	0	0.8	0.2	45.4	1.1	0	0	0	

CITY TRAFFIC COUNTERS
626.991.7522
www.ctcounters.com

File Name : 139th_Hawthorne_Thurs
Site Code : 00000000
Start Date : 2/19/2015
Page No : 2

	Hawthorne Blvd Southbound				139th St Westbound				Hawthorne Blvd Northbound				139th St Eastbound				
Start Time	Left	Thru	Right	App. Total	Left	Thru	Right	App. Total	Left	Thru	Right	App. Total	Left	Thru	Right	App. Total	Int. Total
Peak Hour Analysis From 07:00 AM to 11:45 AM - Peak 1 of 1																	
Peak Hour for Entire Intersection Begins at 08:00 AM																	
08:00 AM	**33**	227	0	260	7	0	7	14	0	**284**	4	**288**	0	0	0	0	**562**
08:15 AM	11	224	0	235	5	0	**15**	20	0	223	1	224	0	0	0	0	479
08:30 AM	10	**254**	0	**264**	**26**	**1**	6	**33**	**6**	255	3	264	**1**	0	0	**1**	562
08:45 AM	9	223	0	232	6	0	2	8	0	269	**8**	277	1	0	0	1	518
Total Volume	63	928	0	991	44	1	30	75	6	1031	16	1053	2	0	0	2	2121
% App. Total	6.4	93.6	0		58.7	1.3	40		0.6	97.9	1.5		100	0	0		
PHF	.477	.913	.000	.938	.423	.250	.500	.568	.250	.908	.500	.914	.500	.000	.000	.500	.944

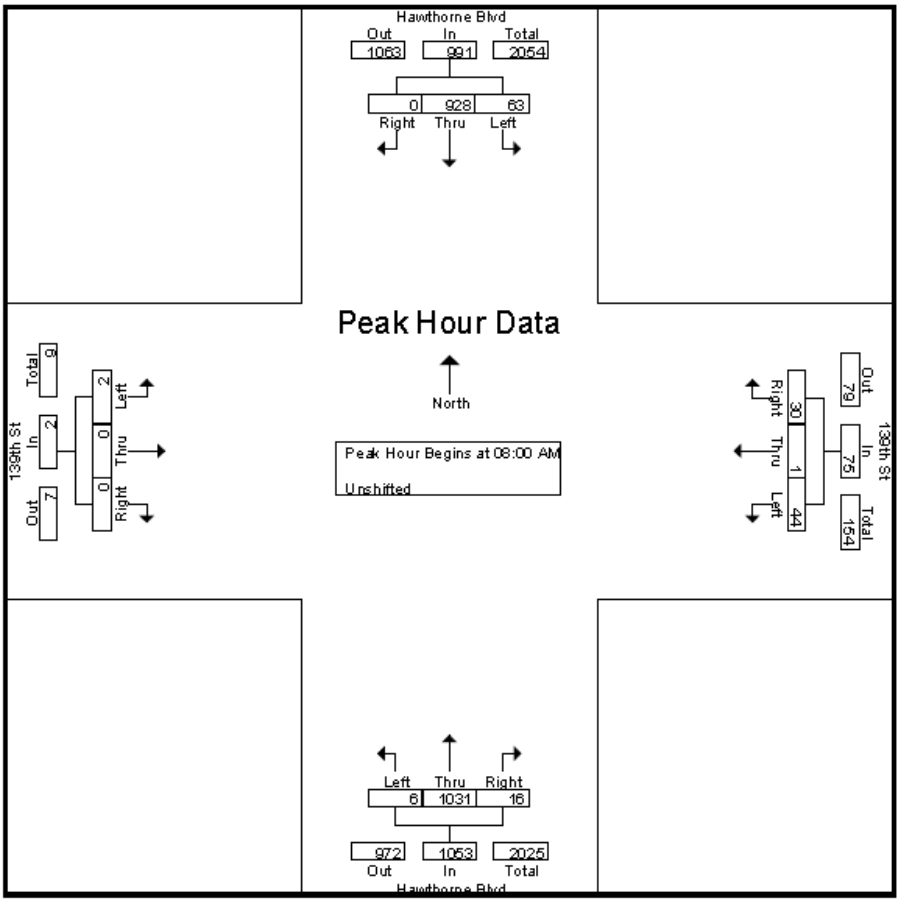

CITY TRAFFIC COUNTERS
626.991.7522
www.ctcounters.com

File Name : 139th_Hawthorne_Thurs
Site Code : 00000000
Start Date : 2/19/2015
Page No : 3

	Hawthorne Blvd Southbound				139th St Westbound				Hawthorne Blvd Northbound				139th St Eastbound				
Start Time	Left	Thru	Right	App. Total	Left	Thru	Right	App. Total	Left	Thru	Right	App. Total	Left	Thru	Right	App. Total	Int. Total
Peak Hour Analysis From 12:00 PM to 05:45 PM - Peak 1 of 1																	
Peak Hour for Entire Intersection Begins at 05:00 PM																	
05:00 PM	17	333	0	350	0	0	0	0	0	281	3	284	0	0	0	0	634
05:15 PM	12	346	0	358	2	0	**1**	3	**1**	**336**	**10**	**347**	0	0	0	0	**708**
05:30 PM	**26**	336	0	362	**4**	0	0	**4**	0	308	8	316	0	0	0	0	682
05:45 PM	16	**365**	0	**381**	0	0	0	0	1	316	8	325	0	0	0	0	706
Total Volume	71	1380	0	1451	6	0	1	7	2	1241	29	1272	0	0	0	0	2730
% App. Total	4.9	95.1	0		85.7	0	14.3		0.2	97.6	2.3		0	0	0		
PHF	.683	.945	.000	.952	.375	.000	.250	.438	.500	.923	.725	.916	.000	.000	.000	.000	.964

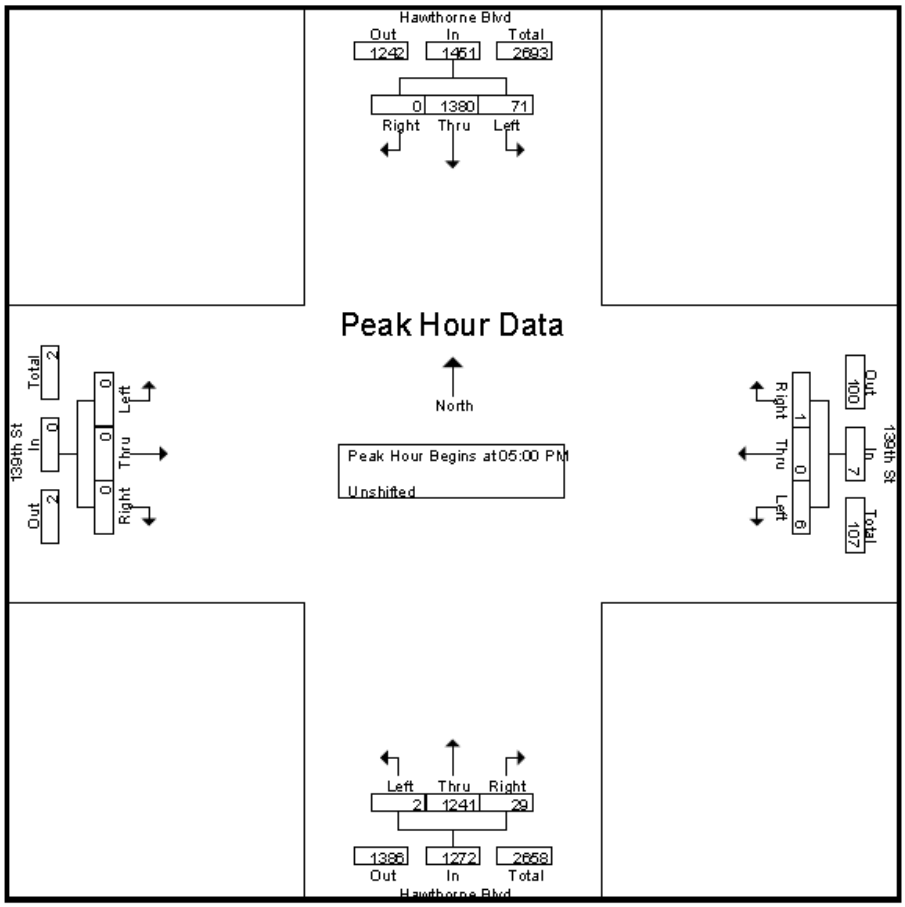

CITY TRAFFIC COUNTERS

626.991.7522

www.ctcounters.com

File Name : 139th_Hawthorne
Site Code : 00000000
Start Date : 2/21/2015
Page No : 1

Groups Printed- Unshifted

	Hawthorne Blvd Southbound			139th St Westbound			Hawthorne Blvd Northbound			139th St Eastbound			
Start Time	Left	Thru	Right	Left	Thru	Right	Left	Thru	Right	Left	Thru	Right	Int. Total
11:00 AM	12	232	0	5	0	3	0	199	4	0	0	0	455
11:15 AM	6	262	0	10	0	4	0	231	3	0	0	0	516
11:30 AM	6	260	0	4	0	6	0	255	3	0	0	0	534
11:45 AM	4	235	0	7	0	2	0	252	5	0	0	0	505
Total	28	989	0	26	0	15	0	937	15	0	0	0	2010
12:00 PM	13	297	0	3	0	6	0	243	5	0	0	0	567
12:15 PM	6	299	0	2	0	3	0	248	4	0	0	0	562
12:30 PM	4	247	0	3	0	8	0	266	2	0	0	0	530
12:45 PM	8	299	0	5	0	7	0	269	5	0	0	0	593
Total	31	1142	0	13	0	24	0	1026	16	0	0	0	2252
Grand Total	59	2131	0	39	0	39	0	1963	31	0	0	0	4262
Apprch %	2.7	97.3	0	50	0	50	0	98.4	1.6	0	0	0	
Total %	1.4	50	0	0.9	0	0.9	0	46.1	0.7	0	0	0	

CITY TRAFFIC COUNTERS

626.991.7522

www.ctcounters.com

File Name : 139th_Hawthorne
Site Code : 00000000
Start Date : 2/21/2015
Page No : 2

	Hawthorne Blvd Southbound				139th St Westbound				Hawthorne Blvd Northbound				139th St Eastbound				
Start Time	Left	Thru	Right	App. Total	Left	Thru	Right	App. Total	Left	Thru	Right	App. Total	Left	Thru	Right	App. Total	Int. Total
Peak Hour Analysis From 11:00 AM to 12:45 PM - Peak 1 of 1																	
Peak Hour for Entire Intersection Begins at 12:00 PM																	
12:00 PM	**13**	297	0	**310**	3	0	6	9	0	243	**5**	248	0	0	0	0	567
12:15 PM	6	**299**	0	305	2	0	3	5	0	248	4	252	0	0	0	0	562
12:30 PM	4	247	0	251	3	0	**8**	11	0	266	2	268	0	0	0	0	530
12:45 PM	8	299	0	307	**5**	0	7	**12**	0	**269**	5	**274**	0	0	0	0	**593**
Total Volume	31	1142	0	1173	13	0	24	37	0	1026	16	1042	0	0	0	0	2252
% App. Total	2.6	97.4	0		35.1	0	64.9		0	98.5	1.5		0	0	0		
PHF	.596	.955	.000	.946	.650	.000	.750	.771	.000	.954	.800	.951	.000	.000	.000	.000	.949

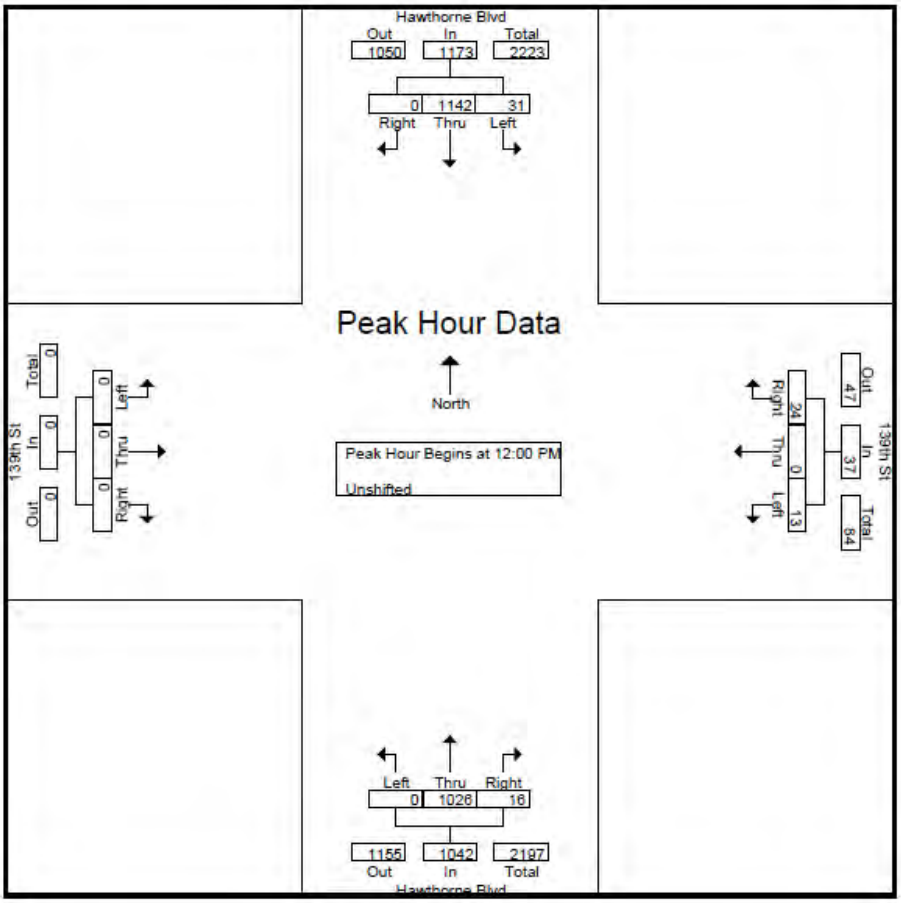

HAWTHORNE BOULEVARD AND IMPERIAL HIGHWAY

CITY TRAFFIC COUNTERS

626.991.7522

www.ctcounters.com

File Name : Imperial_Hawthorne_Wed
Site Code : 00000000
Start Date : 2/18/2015
Page No : 1

Groups Printed- Unshifted

	Hawthorne Blvd Southbound			Imperial Hwy Westbound			Hawthorne Blvd Northbound			Imperial Hwy Eastbound			
Start Time	Left	Thru	Right	Left	Thru	Right	Left	Thru	Right	Left	Thru	Right	Int. Total
07:00 AM	34	114	25	16	208	17	58	166	24	29	111	21	823
07:15 AM	24	155	26	17	306	21	51	118	41	24	89	17	889
07:30 AM	32	179	53	23	371	51	68	138	41	51	110	20	1137
07:45 AM	41	175	77	34	374	31	54	172	42	29	111	18	1158
Total	131	623	181	90	1259	120	231	594	148	133	421	76	4007
08:00 AM	32	178	46	42	348	17	53	137	47	39	117	19	1075
08:15 AM	39	169	43	36	274	26	56	142	59	39	107	19	1009
08:30 AM	20	176	31	35	240	48	33	145	44	34	109	29	944
08:45 AM	18	166	25	42	216	19	48	158	43	24	86	19	864
Total	109	689	145	155	1078	110	190	582	193	136	419	86	3892
04:00 PM	51	240	16	39	78	29	51	193	62	23	409	31	1222
04:15 PM	45	234	16	34	109	14	39	171	50	34	391	33	1170
04:30 PM	52	295	28	28	92	13	51	199	68	30	415	24	1295
04:45 PM	51	267	22	23	98	9	22	179	61	29	397	40	1198
Total	199	1036	82	124	377	65	163	742	241	116	1612	128	4885
05:00 PM	44	299	19	39	107	12	54	243	73	22	415	31	1358
05:15 PM	60	318	25	32	100	26	53	203	74	33	390	39	1353
05:30 PM	42	269	22	32	90	18	32	170	71	28	412	43	1229
05:45 PM	49	277	24	31	111	21	38	208	58	46	373	43	1279
Total	195	1163	90	134	408	77	177	824	276	129	1590	156	5219
Grand Total	634	3511	498	503	3122	372	761	2742	858	514	4042	446	18003
Apprch %	13.7	75.6	10.7	12.6	78.1	9.3	17.5	62.9	19.7	10.3	80.8	8.9	
Total %	3.5	19.5	2.8	2.8	17.3	2.1	4.2	15.2	4.8	2.9	22.5	2.5	

CITY TRAFFIC COUNTERS
626.991.7522
www.ctcounters.com

File Name : Imperial_Hawthorne_Wed
Site Code : 00000000
Start Date : 2/18/2015
Page No : 2

	Hawthorne Blvd Southbound				Imperial Hwy Westbound				Hawthorne Blvd Northbound				Imperial Hwy Eastbound				
Start Time	Left	Thru	Right	App. Total	Left	Thru	Right	App. Total	Left	Thru	Right	App. Total	Left	Thru	Right	App. Total	Int. Total
Peak Hour Analysis From 07:00 AM to 11:45 AM - Peak 1 of 1																	
Peak Hour for Entire Intersection Begins at 07:30 AM																	
07:30 AM	32	**179**	53	264	23	371	**51**	**445**	**68**	138	41	247	**51**	110	**20**	**181**	1137
07:45 AM	**41**	175	**77**	**293**	34	**374**	31	439	54	**172**	42	**268**	29	111	18	158	**1158**
08:00 AM	32	178	46	256	**42**	348	17	407	53	137	47	237	39	**117**	19	175	1075
08:15 AM	39	169	43	251	36	274	26	336	56	142	**59**	257	39	107	19	165	1009
Total Volume	144	701	219	1064	135	1367	125	1627	231	589	189	1009	158	445	76	679	4379
% App. Total	13.5	65.9	20.6		8.3	84	7.7		22.9	58.4	18.7		23.3	65.5	11.2		
PHF	.878	.979	.711	.908	.804	.914	.613	.914	.849	.856	.801	.941	.775	.951	.950	.938	.945

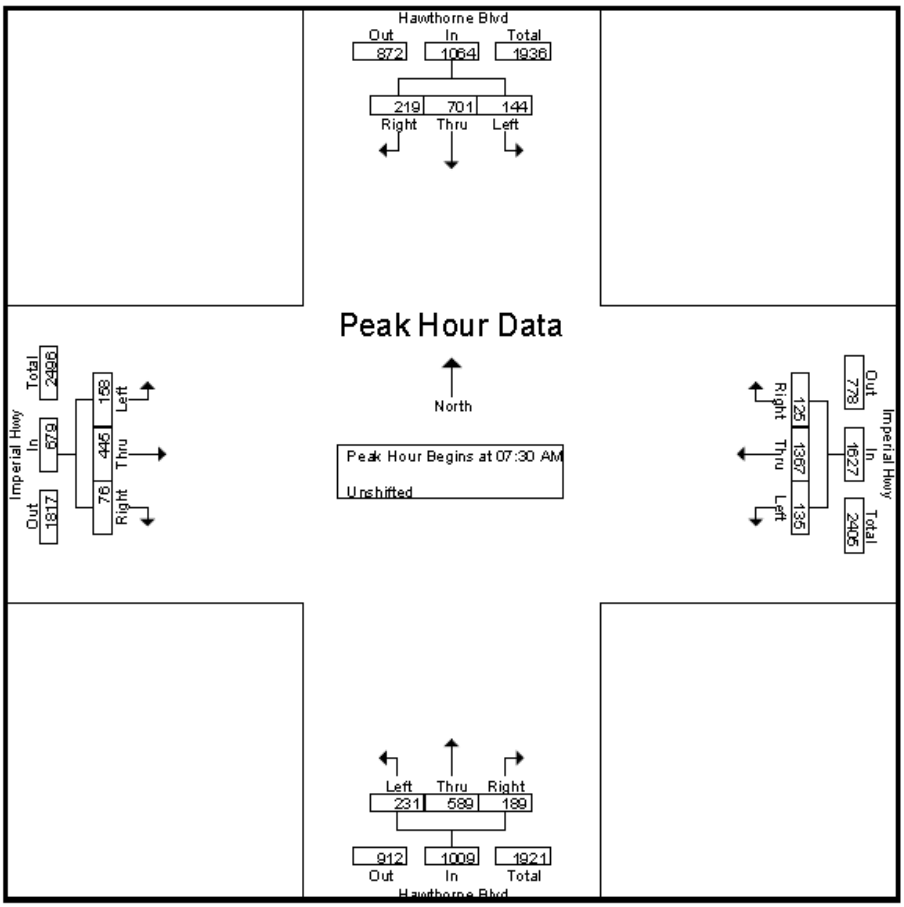

CITY TRAFFIC COUNTERS

626.991.7522

www.ctcounters.com

File Name : Imperial_Hawthorne_Wed
Site Code : 00000000
Start Date : 2/18/2015
Page No : 3

	Hawthorne Blvd Southbound				Imperial Hwy Westbound				Hawthorne Blvd Northbound				Imperial Hwy Eastbound				
Start Time	Left	Thru	Right	App. Total	Left	Thru	Right	App. Total	Left	Thru	Right	App. Total	Left	Thru	Right	App. Total	Int. Total
Peak Hour Analysis From 12:00 PM to 05:45 PM - Peak 1 of 1																	
Peak Hour for Entire Intersection Begins at 05:00 PM																	
05:00 PM	44	299	19	362	**39**	107	12	158	**54**	**243**	73	**370**	22	**415**	31	468	**1358**
05:15 PM	**60**	**318**	**25**	**403**	32	100	**26**	158	53	203	**74**	330	33	390	39	462	1353
05:30 PM	42	269	22	333	32	90	18	140	32	170	71	273	28	412	**43**	**483**	1229
05:45 PM	49	277	24	350	31	**111**	21	**163**	38	208	58	304	**46**	373	43	462	1279
Total Volume	195	1163	90	1448	134	408	77	619	177	824	276	1277	129	1590	156	1875	5219
% App. Total	13.5	80.3	6.2		21.6	65.9	12.4		13.9	64.5	21.6		6.9	84.8	8.3		
PHF	.813	.914	.900	.898	.859	.919	.740	.949	.819	.848	.932	.863	.701	.958	.907	.970	.961

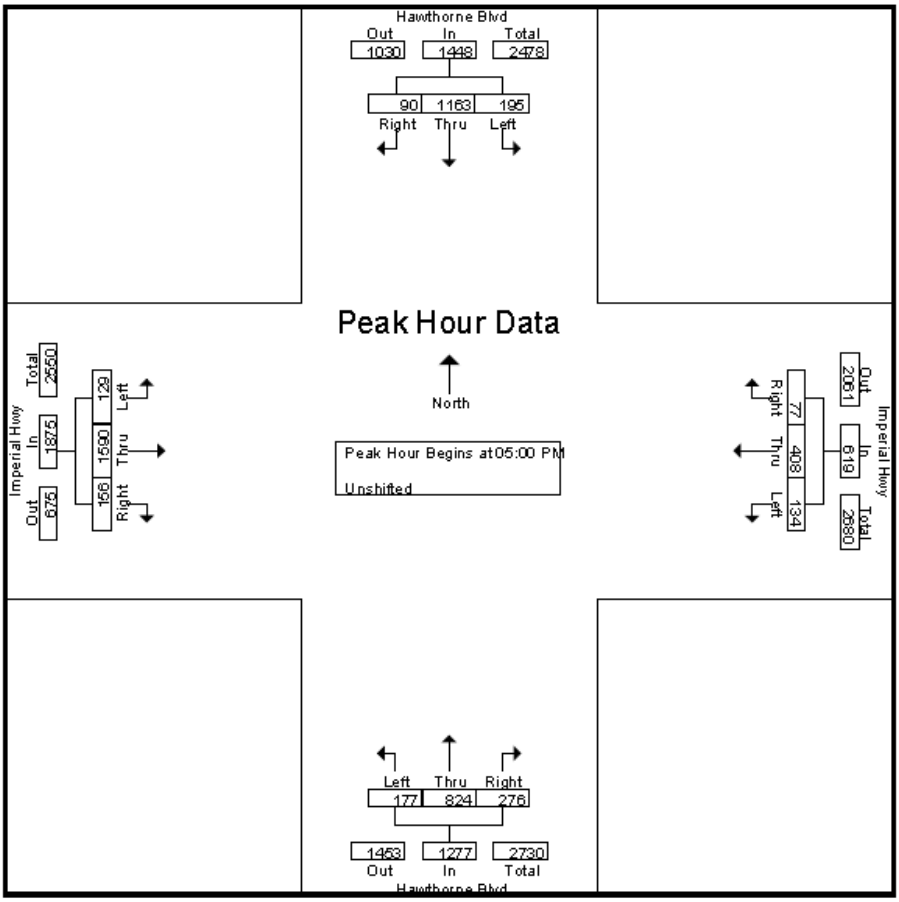

CITY TRAFFIC COUNTERS

626.991.7522

www.ctcounters.com

File Name : Imperial_Hawthorne
Site Code : 00000000
Start Date : 2/14/2015
Page No : 1

Groups Printed- Unshifted

	Hawthorne Blvd Southbound			Imperial Hwy Westbound			Hawthorne Blvd Northbound			Imperial Hwy Eastbound			
Start Time	Left	Thru	Right	Left	Thru	Right	Left	Thru	Right	Left	Thru	Right	Int. Total
11:00 AM	34	256	32	41	70	39	21	157	118	25	103	31	927
11:15 AM	21	227	23	45	88	29	38	179	98	32	100	20	900
11:30 AM	33	202	39	45	96	36	39	185	106	26	89	26	922
11:45 AM	27	214	33	40	75	38	29	175	85	42	126	19	903
Total	115	899	127	171	329	142	127	696	407	125	418	96	3652
12:00 PM	45	212	40	40	83	27	57	199	137	31	112	18	1001
12:15 PM	36	229	33	54	73	24	41	256	101	48	101	20	1016
12:30 PM	47	189	57	41	102	42	44	200	123	54	115	33	1047
12:45 PM	44	226	49	33	81	27	37	194	110	46	107	21	975
Total	172	856	179	168	339	120	179	849	471	179	435	92	4039
Grand Total	287	1755	306	339	668	262	306	1545	878	304	853	188	7691
Apprch %	12.2	74.7	13	26.7	52.6	20.6	11.2	56.6	32.2	22.6	63.4	14	
Total %	3.7	22.8	4	4.4	8.7	3.4	4	20.1	11.4	4	11.1	2.4	

CITY TRAFFIC COUNTERS

626.991.7522

www.ctcounters.com

File Name : Imperial_Hawthorne
Site Code : 00000000
Start Date : 2/14/2015
Page No : 2

	Hawthorne Blvd Southbound				Imperial Hwy Westbound				Hawthorne Blvd Northbound				Imperial Hwy Eastbound				
Start Time	Left	Thru	Right	App. Total	Left	Thru	Right	App. Total	Left	Thru	Right	App. Total	Left	Thru	Right	App. Total	Int. Total
Peak Hour Analysis From 11:00 AM to 12:45 PM - Peak 1 of 1																	
Peak Hour for Entire Intersection Begins at 12:00 PM																	
12:00 PM	45	212	40	297	40	83	27	150	**57**	199	**137**	393	31	112	18	161	1001
12:15 PM	36	**229**	33	298	**54**	73	24	151	41	**256**	101	**398**	48	101	20	169	1016
12:30 PM	**47**	189	**57**	293	41	**102**	**42**	**185**	44	200	123	367	**54**	**115**	**33**	**202**	**1047**
12:45 PM	44	226	49	**319**	33	81	27	141	37	194	110	341	46	107	21	174	975
Total Volume	172	856	179	1207	168	339	120	627	179	849	471	1499	179	435	92	706	4039
% App. Total	14.3	70.9	14.8		26.8	54.1	19.1		11.9	56.6	31.4		25.4	61.6	13		
PHF	.915	.934	.785	.946	.778	.831	.714	.847	.785	.829	.859	.942	.829	.946	.697	.874	.964

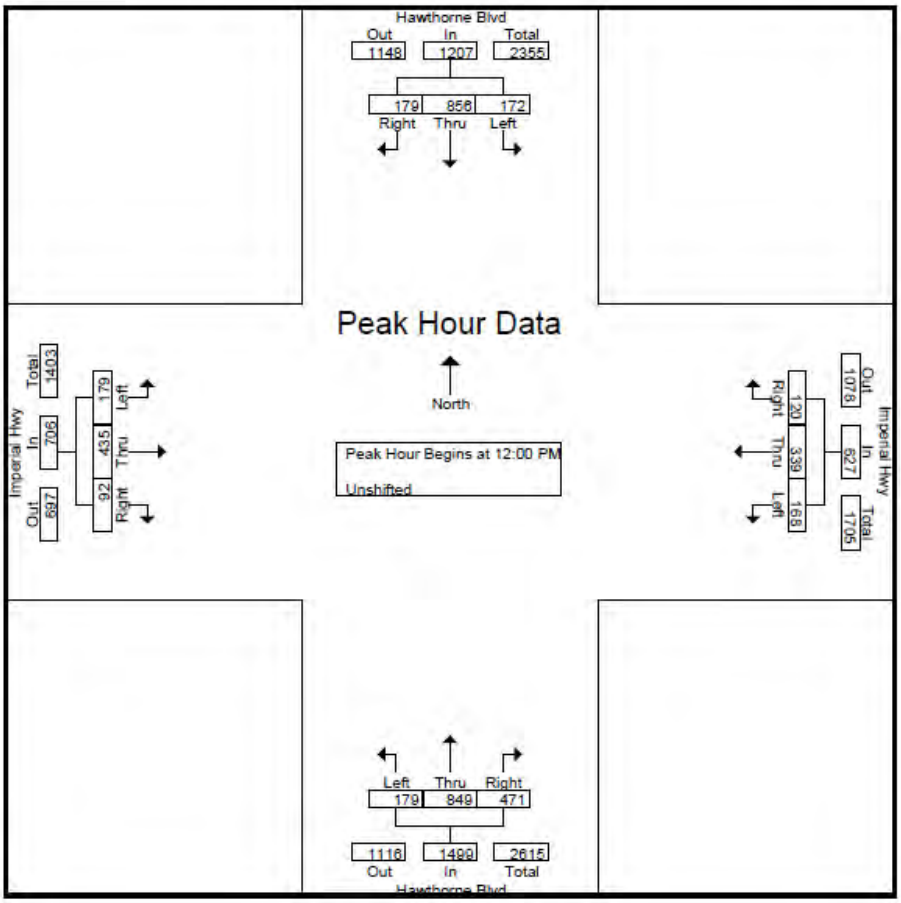

HAWTHORNE BOULEVARD AND BROADWAY

CITY TRAFFIC COUNTERS

626.991.7522

www.ctcounters.com

File Name : Broadway_Hawthorne_Wed
Site Code : 00000000
Start Date : 2/18/2015
Page No : 1

Groups Printed- Unshifted

	Hawthorne Blvd Southbound			Broadway Westbound			Hawthorne Blvd Northbound			Broadway Eastbound			
Start Time	Left	Thru	Right	Left	Thru	Right	Left	Thru	Right	Left	Thru	Right	Int. Total
07:00 AM	0	102	0	0	0	0	7	149	0	5	0	2	265
07:15 AM	0	115	2	0	0	0	16	168	0	9	0	9	319
07:30 AM	0	135	5	0	0	0	53	218	0	15	0	29	455
07:45 AM	0	175	1	0	0	0	74	240	0	15	0	80	585
Total	0	527	8	0	0	0	150	775	0	44	0	120	1624
08:00 AM	0	193	4	0	0	0	46	269	0	11	0	51	574
08:15 AM	0	187	2	0	0	0	31	238	0	19	0	56	533
08:30 AM	0	195	2	0	0	0	22	248	0	6	0	28	501
08:45 AM	0	172	1	0	0	0	18	199	0	6	0	20	416
Total	0	747	9	0	0	0	117	954	0	42	0	155	2024
04:00 PM	0	289	0	0	0	0	12	230	0	16	0	46	593
04:15 PM	0	286	0	0	0	0	26	248	0	8	0	45	613
04:30 PM	0	263	0	0	0	0	14	224	0	21	0	43	565
04:45 PM	0	339	0	0	0	0	18	269	0	17	0	36	679
Total	0	1177	0	0	0	0	70	971	0	62	0	170	2450
05:00 PM	0	311	2	0	0	0	17	262	0	11	0	30	633
05:15 PM	0	347	0	0	0	0	20	260	0	25	0	21	673
05:30 PM	0	288	1	0	0	0	16	252	0	32	0	20	609
05:45 PM	0	313	0	0	0	0	23	269	0	17	0	16	638
Total	0	1259	3	0	0	0	76	1043	0	85	0	87	2553
Grand Total	0	3710	20	0	0	0	413	3743	0	233	0	532	8651
Apprch %	0	99.5	0.5	0	0	0	9.9	90.1	0	30.5	0	69.5	
Total %	0	42.9	0.2	0	0	0	4.8	43.3	0	2.7	0	6.1	

CITY TRAFFIC COUNTERS
626.991.7522
www.ctcounters.com

File Name : Broadway_Hawthorne_Wed
Site Code : 00000000
Start Date : 2/18/2015
Page No : 2

	Hawthorne Blvd Southbound				Broadway Westbound				Hawthorne Blvd Northbound				Broadway Eastbound				
Start Time	Left	Thru	Right	App. Total	Left	Thru	Right	App. Total	Left	Thru	Right	App. Total	Left	Thru	Right	App. Total	Int. Total
Peak Hour Analysis From 07:00 AM to 11:45 AM - Peak 1 of 1																	
Peak Hour for Entire Intersection Begins at 07:45 AM																	
07:45 AM	0	175	1	176	0	0	0	0	**74**	240	0	314	15	0	**80**	**95**	**585**
08:00 AM	0	193	**4**	**197**	0	0	0	0	46	**269**	0	**315**	11	0	51	62	574
08:15 AM	0	187	2	189	0	0	0	0	31	238	0	269	**19**	0	56	75	533
08:30 AM	0	**195**	2	197	0	0	0	0	22	248	0	270	6	0	28	34	501
Total Volume	0	750	9	759	0	0	0	0	173	995	0	1168	51	0	215	266	2193
% App. Total	0	98.8	1.2		0	0	0		14.8	85.2	0		19.2	0	80.8		
PHF	.000	.962	.563	.963	.000	.000	.000	.000	.584	.925	.000	.927	.671	.000	.672	.700	.937

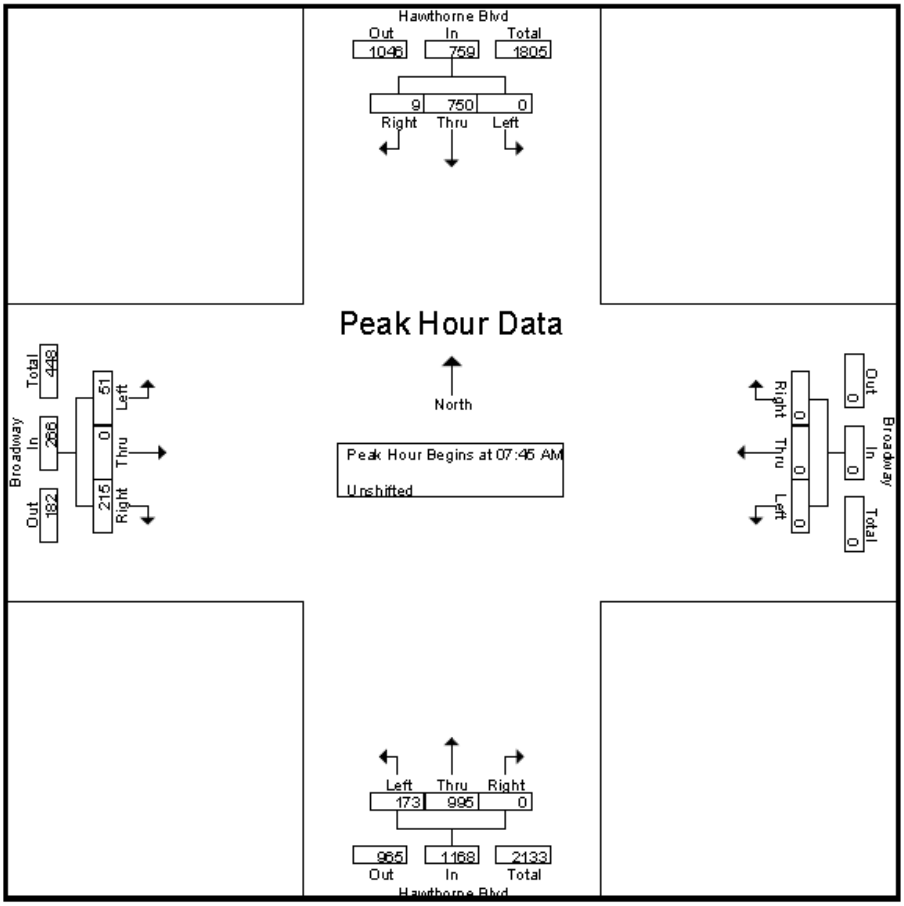

CITY TRAFFIC COUNTERS
626.991.7522
www.ctcounters.com

File Name : Broadway_Hawthorne_Wed
Site Code : 00000000
Start Date : 2/18/2015
Page No : 3

	Hawthorne Blvd Southbound				Broadway Westbound				Hawthorne Blvd Northbound				Broadway Eastbound				
Start Time	Left	Thru	Right	App. Total	Left	Thru	Right	App. Total	Left	Thru	Right	App. Total	Left	Thru	Right	App. Total	Int. Total
Peak Hour Analysis From 12:00 PM to 05:45 PM - Peak 1 of 1																	
Peak Hour for Entire Intersection Begins at 04:45 PM																	
04:45 PM	0	339	0	339	0	0	0	0	18	**269**	0	**287**	17	0	**36**	**53**	**679**
05:00 PM	0	311	**2**	313	0	0	0	0	17	262	0	279	11	0	30	41	633
05:15 PM	0	**347**	0	**347**	0	0	0	0	**20**	260	0	280	25	0	21	46	673
05:30 PM	0	288	1	289	0	0	0	0	16	252	0	268	**32**	0	20	52	609
Total Volume	0	1285	3	1288	0	0	0	0	71	1043	0	1114	85	0	107	192	2594
% App. Total	0	99.8	0.2		0	0	0		6.4	93.6	0		44.3	0	55.7		
PHF	.000	.926	.375	.928	.000	.000	.000	.000	.888	.969	.000	.970	.664	.000	.743	.906	.955

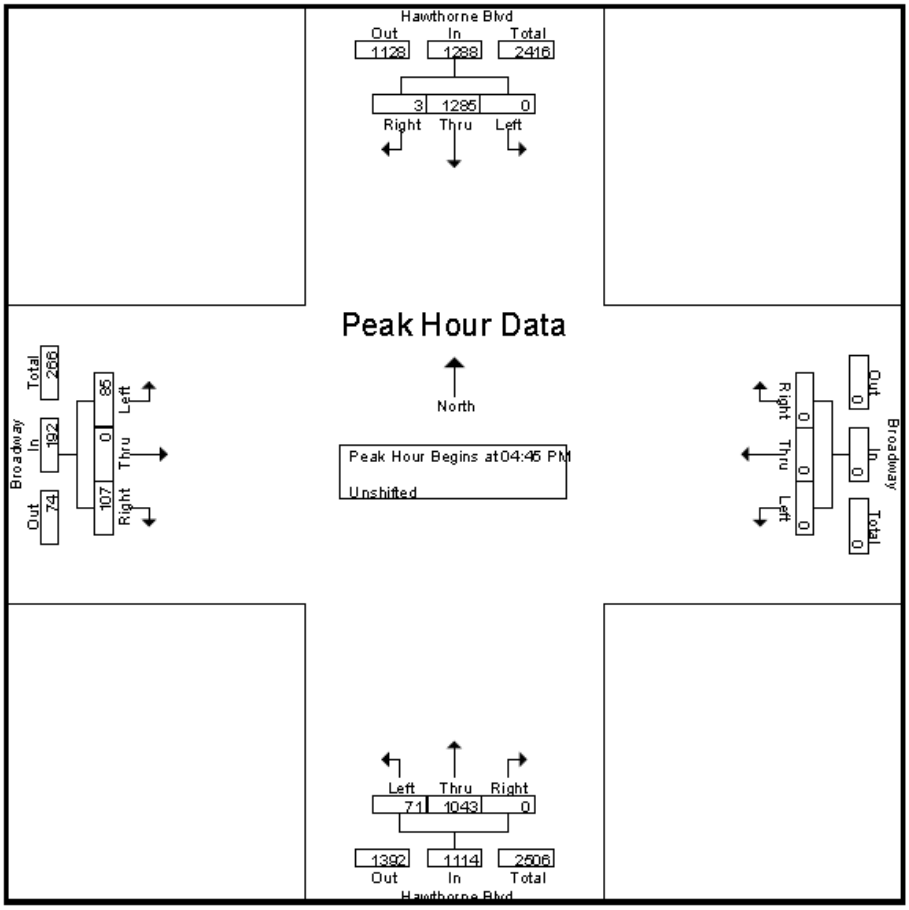

CITY TRAFFIC COUNTERS

626.991.7522

www.ctcounters.com

File Name : Broadway_Hawthorne
Site Code : 00000000
Start Date : 2/14/2015
Page No : 1

Groups Printed- Unshifted

	Hawthorne Blvd Southbound			Broadway Westbound			Hawthorne Blvd Northbound			Broadway Eastbound			
Start Time	Left	Thru	Right	Left	Thru	Right	Left	Thru	Right	Left	Thru	Right	Int. Total
11:00 AM	0	268	7	0	0	0	12	239	0	6	0	33	565
11:15 AM	1	292	5	0	0	0	14	257	0	7	0	24	600
11:30 AM	3	269	6	0	0	0	16	319	0	8	0	13	634
11:45 AM	3	298	8	0	0	0	23	335	0	5	0	20	692
Total	7	1127	26	0	0	0	65	1150	0	26	0	90	2491
12:00 PM	0	257	4	0	0	0	10	336	0	6	0	28	641
12:15 PM	1	295	10	0	0	0	13	310	0	8	0	24	661
12:30 PM	1	291	10	0	0	0	22	319	0	5	0	26	674
12:45 PM	1	300	11	0	0	0	17	321	0	8	0	31	689
Total	3	1143	35	0	0	0	62	1286	0	27	0	109	2665
Grand Total	10	2270	61	0	0	0	127	2436	0	53	0	199	5156
Apprch %	0.4	97	2.6	0	0	0	5	95	0	21	0	79	
Total %	0.2	44	1.2	0	0	0	2.5	47.2	0	1	0	3.9	

CITY TRAFFIC COUNTERS

626.991.7522

www.ctcounters.com

File Name : Broadway_Hawthorne
Site Code : 00000000
Start Date : 2/14/2015
Page No : 2

	Hawthorne Blvd Southbound				Broadway Westbound				Hawthorne Blvd Northbound				Broadway Eastbound				
Start Time	Left	Thru	Right	App. Total	Left	Thru	Right	App. Total	Left	Thru	Right	App. Total	Left	Thru	Right	App. Total	Int. Total
Peak Hour Analysis From 11:00 AM to 12:45 PM - Peak 1 of 1																	
Peak Hour for Entire Intersection Begins at 11:45 AM																	
11:45 AM	3	298	8	309	0	0	0	0	23	335	0	358	5	0	20	25	692
12:00 PM	0	257	4	261	0	0	0	0	10	336	0	346	6	0	28	34	641
12:15 PM	1	295	10	306	0	0	0	0	13	310	0	323	8	0	24	32	661
12:30 PM	1	291	10	302	0	0	0	0	22	319	0	341	5	0	26	31	674
Total Volume	5	1141	32	1178	0	0	0	0	68	1300	0	1368	24	0	98	122	2668
% App. Total	0.4	96.9	2.7		0	0	0		5	95	0		19.7	0	80.3		
PHF	.417	.957	.800	.953	.000	.000	.000	.000	.739	.967	.000	.955	.750	.000	.875	.897	.964

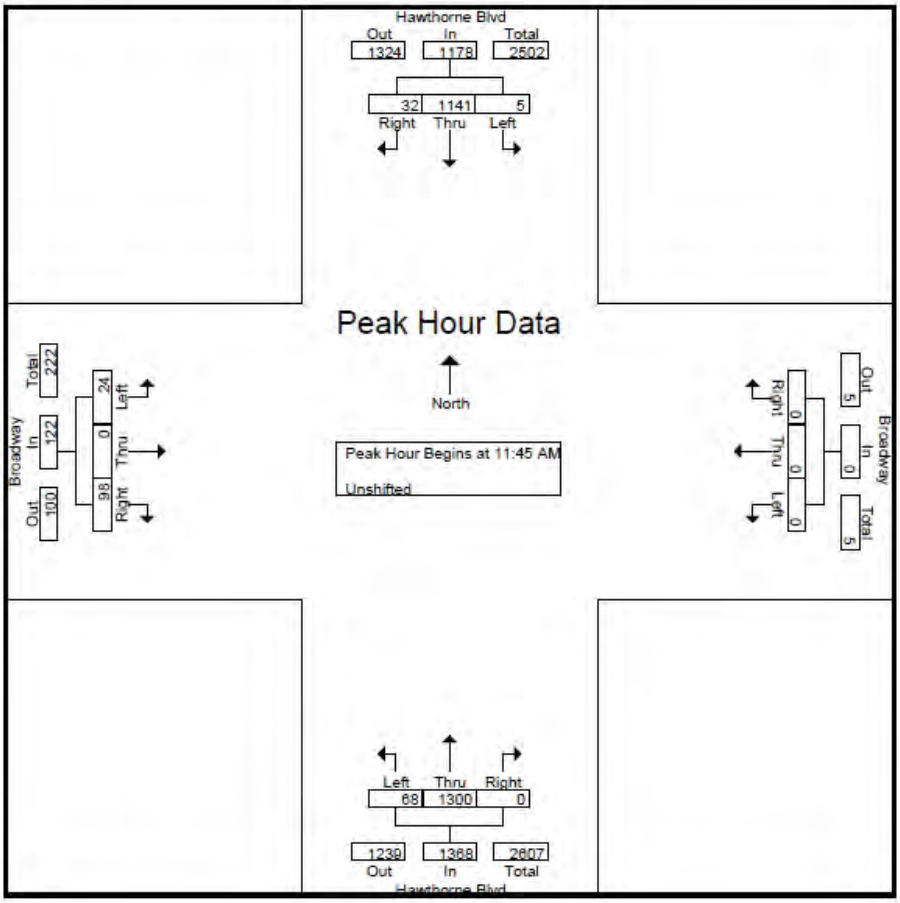

HAWTHORNE BOULEVARD AND EL SEGUNDO BOULEVARD

CITY TRAFFIC COUNTERS

626.991.7522

www.ctcounters.com

File Name : Segundo_Hawthorne_Thurs
Site Code : 00000000
Start Date : 2/19/2015
Page No : 1

Groups Printed- Unshifted

	Hawthorne Ave Southbound			El Segundo Blvd Westbound			Hawthorne Ave Northbound			El Segundo Blvd Eastbound			
Start Time	Left	Thru	Right	Left	Thru	Right	Left	Thru	Right	Left	Thru	Right	Int. Total
07:00 AM	20	65	12	14	259	36	58	109	15	17	88	12	705
07:15 AM	32	89	10	35	229	41	62	128	15	14	102	22	779
07:30 AM	48	139	13	36	288	37	65	191	19	29	122	21	1008
07:45 AM	107	161	35	25	315	49	76	197	23	27	186	27	1228
Total	207	454	70	110	1091	163	261	625	72	87	498	82	3720
08:00 AM	77	178	33	32	279	38	52	197	35	32	208	37	1198
08:15 AM	78	151	21	32	222	36	70	233	50	30	179	25	1127
08:30 AM	56	153	22	58	247	27	54	226	30	27	165	32	1097
08:45 AM	40	134	31	53	212	30	40	109	19	33	137	32	870
Total	251	616	107	175	960	131	216	765	134	122	689	126	4292
04:00 PM	82	217	35	44	190	45	43	176	29	30	289	62	1242
04:15 PM	91	230	34	33	140	34	46	193	32	36	298	59	1226
04:30 PM	53	229	33	36	170	41	27	189	41	29	338	73	1259
04:45 PM	74	225	27	37	168	34	52	188	53	24	330	63	1275
Total	300	901	129	150	668	154	168	746	155	119	1255	257	5002
05:00 PM	92	264	24	37	171	40	45	189	51	28	342	80	1363
05:15 PM	82	208	28	42	129	30	43	201	43	30	318	78	1232
05:30 PM	74	217	22	41	163	45	36	185	44	37	336	67	1267
05:45 PM	85	270	36	47	124	28	52	207	48	32	334	70	1333
Total	333	959	110	167	587	143	176	782	186	127	1330	295	5195
Grand Total	1091	2930	416	602	3306	591	821	2918	547	455	3772	760	18209
Apprch %	24.6	66	9.4	13.4	73.5	13.1	19.2	68.1	12.8	9.1	75.6	15.2	
Total %	6	16.1	2.3	3.3	18.2	3.2	4.5	16	3	2.5	20.7	4.2	

CITY TRAFFIC COUNTERS
626.991.7522
www.ctcounters.com

File Name : Segundo_Hawthorne_Thurs
Site Code : 00000000
Start Date : 2/19/2015
Page No : 2

	Hawthorne Ave Southbound				El Segundo Blvd Westbound				Hawthorne Ave Northbound				El Segundo Blvd Eastbound				
Start Time	Left	Thru	Right	App. Total	Left	Thru	Right	App. Total	Left	Thru	Right	App. Total	Left	Thru	Right	App. Total	Int. Total
Peak Hour Analysis From 07:00 AM to 11:45 AM - Peak 1 of 1																	
Peak Hour for Entire Intersection Begins at 07:45 AM																	
07:45 AM	**107**	161	**35**	**303**	25	**315**	**49**	**389**	**76**	197	23	296	27	186	27	240	**1228**
08:00 AM	77	**178**	33	288	32	279	38	349	52	197	35	284	**32**	**208**	**37**	**277**	1198
08:15 AM	78	151	21	250	32	222	36	290	70	**233**	**50**	**353**	30	179	25	234	1127
08:30 AM	56	153	22	231	**58**	247	27	332	54	226	30	310	27	165	32	224	1097
Total Volume	318	643	111	1072	147	1063	150	1360	252	853	138	1243	116	738	121	975	4650
% App. Total	29.7	60	10.4		10.8	78.2	11		20.3	68.6	11.1		11.9	75.7	12.4		
PHF	.743	.903	.793	.884	.634	.844	.765	.874	.829	.915	.690	.880	.906	.887	.818	.880	.947

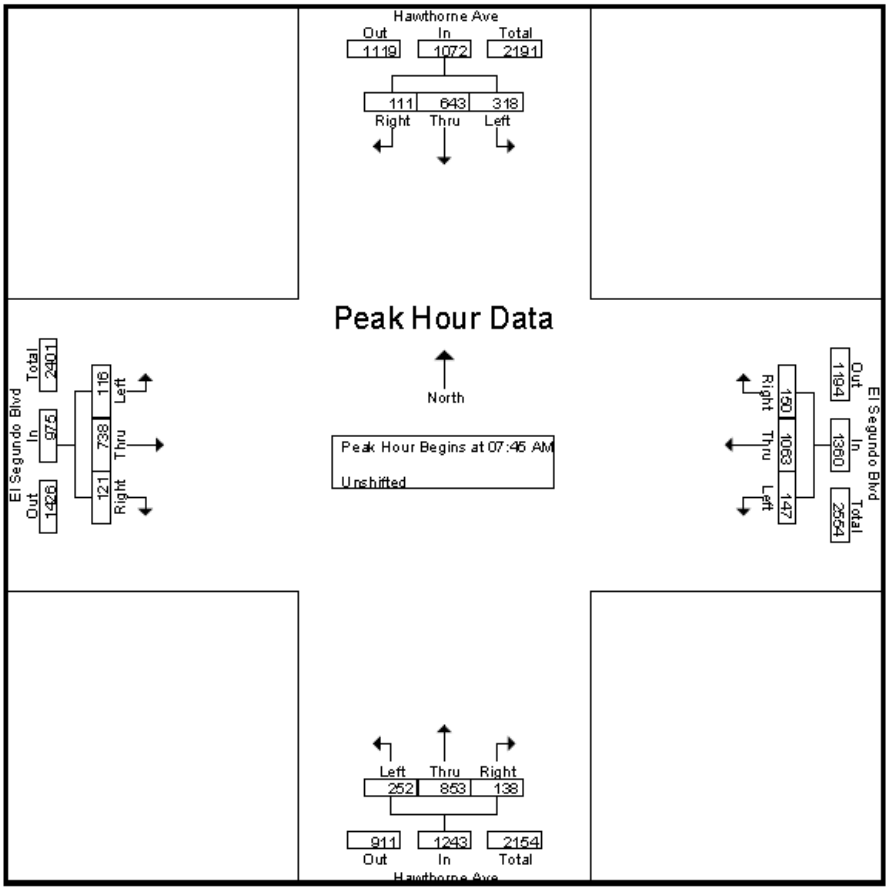

CITY TRAFFIC COUNTERS
626.991.7522
www.ctcounters.com

File Name : Segundo_Hawthorne_Thurs
Site Code : 00000000
Start Date : 2/19/2015
Page No : 3

	Hawthorne Ave Southbound				El Segundo Blvd Westbound				Hawthorne Ave Northbound				El Segundo Blvd Eastbound				
Start Time	Left	Thru	Right	App. Total	Left	Thru	Right	App. Total	Left	Thru	Right	App. Total	Left	Thru	Right	App. Total	Int. Total
Peak Hour Analysis From 12:00 PM to 05:45 PM - Peak 1 of 1																	
Peak Hour for Entire Intersection Begins at 05:00 PM																	
05:00 PM	**92**	264	24	380	37	**171**	40	248	45	189	**51**	285	28	**342**	**80**	**450**	**1363**
05:15 PM	82	208	28	318	42	129	30	201	43	201	43	287	30	318	78	426	1232
05:30 PM	74	217	22	313	41	163	**45**	**249**	36	185	44	265	**37**	336	67	440	1267
05:45 PM	85	**270**	**36**	**391**	**47**	124	28	199	**52**	**207**	48	**307**	32	334	70	436	1333
Total Volume	333	959	110	1402	167	587	143	897	176	782	186	1144	127	1330	295	1752	5195
% App. Total	23.8	68.4	7.8		18.6	65.4	15.9		15.4	68.4	16.3		7.2	75.9	16.8		
PHF	.905	.888	.764	.896	.888	.858	.794	.901	.846	.944	.912	.932	.858	.972	.922	.973	.953

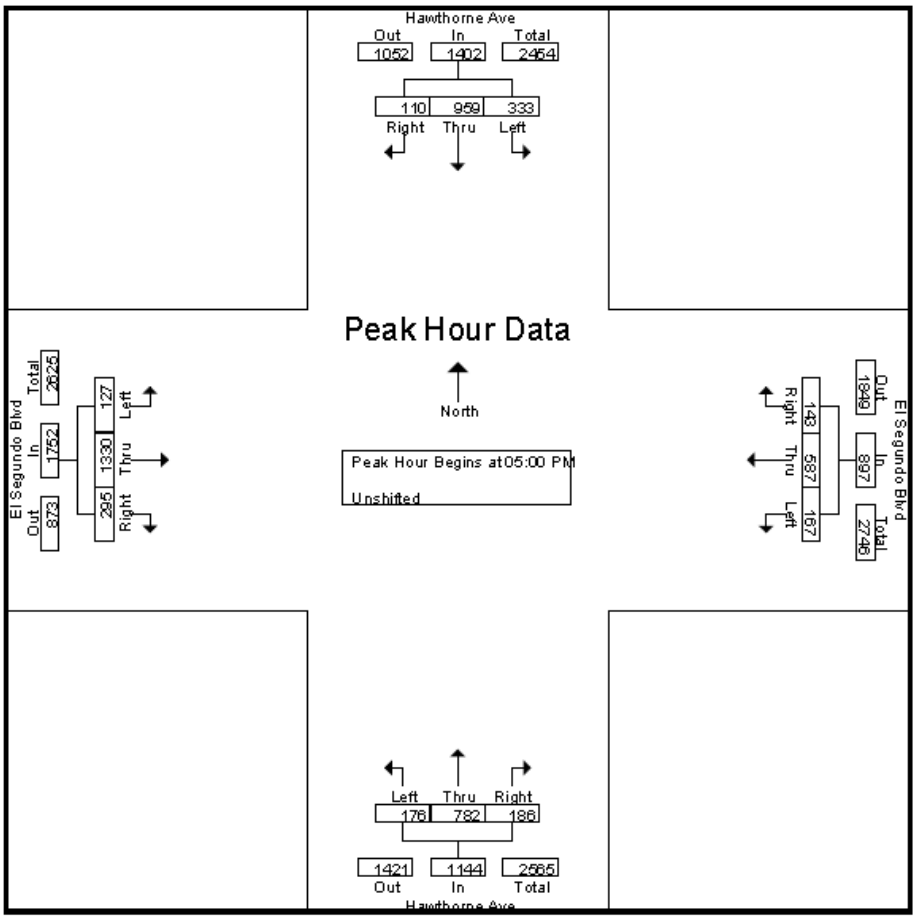

CITY TRAFFIC COUNTERS

626.991.7522

www.ctcounters.com

File Name : Segundo_Hawthorne_Sat
Site Code : 00000000
Start Date : 2/21/2015
Page No : 1

Groups Printed- Unshifted

	Hawthorne Blvd Southbound			El Segundo Blvd Westbound			Hawthorne Blvd Northbound			El Segundo Blvd Eastbound			
Start Time	Left	Thru	Right	Left	Thru	Right	Left	Thru	Right	Left	Thru	Right	Int. Total
11:00 AM	47	204	25	60	155	33	45	169	12	27	98	19	894
11:15 AM	45	201	23	68	143	35	40	190	16	25	119	20	925
11:30 AM	58	246	34	77	130	30	53	219	17	32	120	20	1036
11:45 AM	54	252	44	65	146	48	52	204	20	37	141	23	1086
Total	204	903	126	270	574	146	190	782	65	121	478	82	3941
12:00 PM	32	208	19	54	151	33	51	219	29	31	144	31	1002
12:15 PM	52	229	33	59	138	36	53	221	24	30	169	24	1068
12:30 PM	59	240	27	55	155	30	55	229	23	42	150	31	1096
12:45 PM	56	243	34	62	151	53	49	202	20	39	130	27	1066
Total	199	920	113	230	595	152	208	871	96	142	593	113	4232
Grand Total	403	1823	239	500	1169	298	398	1653	161	263	1071	195	8173
Apprch %	16.3	74	9.7	25.4	59.4	15.1	18	74.7	7.3	17.2	70	12.8	
Total %	4.9	22.3	2.9	6.1	14.3	3.6	4.9	20.2	2	3.2	13.1	2.4	

CITY TRAFFIC COUNTERS

626.991.7522

www.ctcounters.com

File Name : Segundo_Hawthorne_Sat
Site Code : 00000000
Start Date : 2/21/2015
Page No : 2

	Hawthorne Blvd Southbound				El Segundo Blvd Westbound				Hawthorne Blvd Northbound				El Segundo Blvd Eastbound				
Start Time	Left	Thru	Right	App. Total	Left	Thru	Right	App. Total	Left	Thru	Right	App. Total	Left	Thru	Right	App. Total	Int. Total
Peak Hour Analysis From 11:00 AM to 12:45 PM - Peak 1 of 1																	
Peak Hour for Entire Intersection Begins at 11:45 AM																	
11:45 AM	54	**252**	**44**	**350**	**65**	146	**48**	**259**	52	204	20	276	37	141	23	201	1086
12:00 PM	32	208	19	259	54	151	33	238	51	219	**29**	299	31	144	**31**	206	1002
12:15 PM	52	229	33	314	59	138	36	233	53	221	24	298	30	**169**	24	**223**	1068
12:30 PM	**59**	240	27	326	55	**155**	30	240	**55**	**229**	23	**307**	**42**	150	31	223	**1096**
Total Volume	197	929	123	1249	233	590	147	970	211	873	96	1180	140	604	109	853	4252
% App. Total	15.8	74.4	9.8		24	60.8	15.2		17.9	74	8.1		16.4	70.8	12.8		
PHF	.835	.922	.699	.892	.896	.952	.766	.936	.959	.953	.828	.961	.833	.893	.879	.956	.970

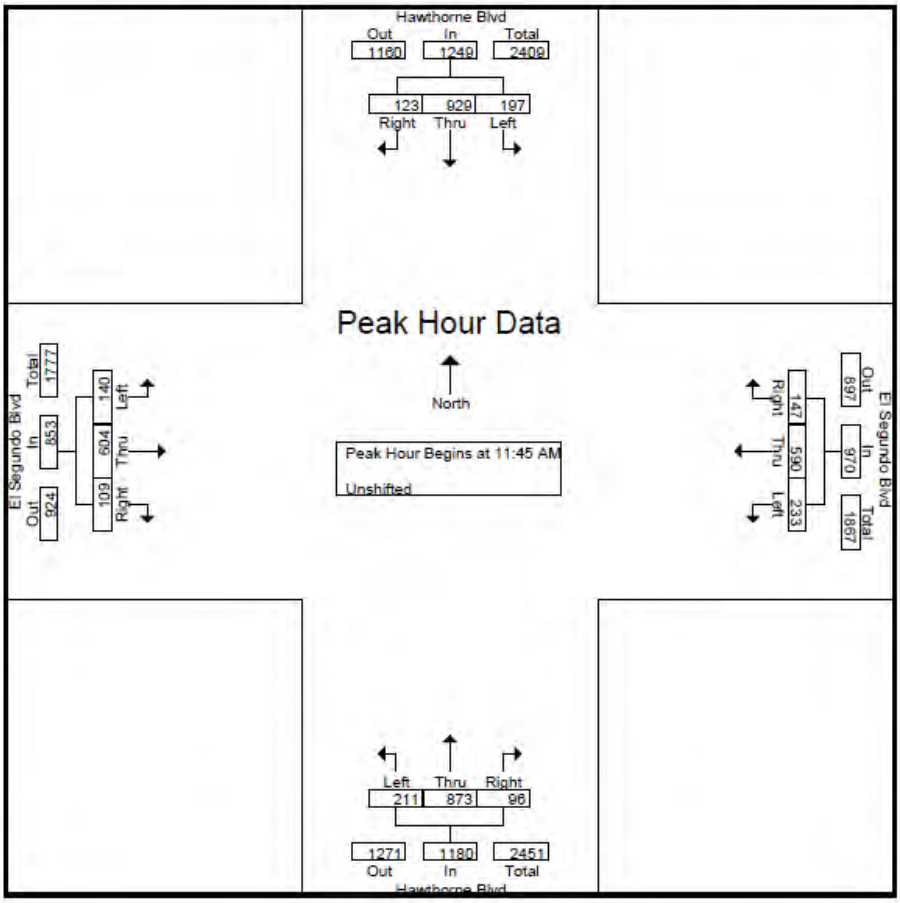

HAWTHORNE BOULEVARD AND ROSECRANS AVENUE

CITY TRAFFIC COUNTERS

626.991.7522

www.ctcounters.com

File Name : Rosecrans_Hawthorne_Thurs
Site Code : 00000000
Start Date : 2/19/2015
Page No : 1

Groups Printed- Unshifted

	Hawthorne Blvd Southbound			Rosecrans Ave Westbound			Hawthorne Blvd Northbound			Rosecrans Ave Eastbound			
Start Time	Left	Thru	Right	Left	Thru	Right	Left	Thru	Right	Left	Thru	Right	Int. Total
07:00 AM	14	101	17	19	236	30	49	89	11	13	62	13	654
07:15 AM	18	152	24	27	249	44	76	105	17	17	73	17	819
07:30 AM	30	173	47	25	308	58	99	154	18	19	77	21	1029
07:45 AM	27	130	54	26	281	79	96	146	33	33	167	23	1095
Total	89	556	142	97	1074	211	320	494	79	82	379	74	3597
08:00 AM	33	170	39	31	268	45	76	201	20	21	126	16	1046
08:15 AM	45	166	40	29	203	67	62	181	11	20	90	25	939
08:30 AM	57	160	48	35	187	44	76	171	21	31	98	25	953
08:45 AM	40	166	40	32	0	41	56	137	21	22	105	20	680
Total	175	662	167	127	658	197	270	690	73	94	419	86	3618
04:00 PM	59	216	29	32	159	28	65	192	50	37	262	24	1153
04:15 PM	61	214	36	25	169	22	46	209	55	26	233	130	1226
04:30 PM	72	207	40	36	174	33	54	207	44	23	290	39	1219
04:45 PM	74	224	36	31	151	35	49	191	39	31	237	32	1130
Total	266	861	141	124	653	118	214	799	188	117	1022	225	4728
05:00 PM	84	251	42	38	196	29	40	216	42	31	253	41	1263
05:15 PM	92	281	31	35	144	40	67	226	34	30	281	46	1307
05:30 PM	98	243	39	36	169	22	47	222	45	39	304	42	1306
05:45 PM	75	279	47	41	177	20	47	220	41	23	288	37	1295
Total	349	1054	159	150	686	111	201	884	162	123	1126	166	5171
Grand Total	879	3133	609	498	3071	637	1005	2867	502	416	2946	551	17114
Apprch %	19	67.8	13.2	11.8	73	15.1	23	65.5	11.5	10.6	75.3	14.1	
Total %	5.1	18.3	3.6	2.9	17.9	3.7	5.9	16.8	2.9	2.4	17.2	3.2	

CITY TRAFFIC COUNTERS

626.991.7522

www.ctcounters.com

File Name : Rosecrans_Hawthorne_Thurs
Site Code : 00000000
Start Date : 2/19/2015
Page No : 2

	Hawthorne Blvd Southbound				Rosecrans Ave Westbound				Hawthorne Blvd Northbound				Rosecrans Ave Eastbound				
Start Time	Left	Thru	Right	App. Total	Left	Thru	Right	App. Total	Left	Thru	Right	App. Total	Left	Thru	Right	App. Total	Int. Total
Peak Hour Analysis From 07:00 AM to 11:45 AM - Peak 1 of 1																	
Peak Hour for Entire Intersection Begins at 07:30 AM																	
07:30 AM	30	**173**	47	250	25	**308**	58	**391**	**99**	154	18	271	19	77	21	117	1029
07:45 AM	27	130	**54**	211	26	281	**79**	386	96	146	**33**	275	**33**	**167**	23	**223**	**1095**
08:00 AM	33	170	39	242	**31**	268	45	344	76	**201**	20	**297**	21	126	16	163	1046
08:15 AM	**45**	166	40	**251**	29	203	67	299	62	181	11	254	20	90	**25**	135	939
Total Volume	135	639	180	954	111	1060	249	1420	333	682	82	1097	93	460	85	638	4109
% App. Total	14.2	67	18.9		7.8	74.6	17.5		30.4	62.2	7.5		14.6	72.1	13.3		
PHF	.750	.923	.833	.950	.895	.860	.788	.908	.841	.848	.621	.923	.705	.689	.850	.715	.938

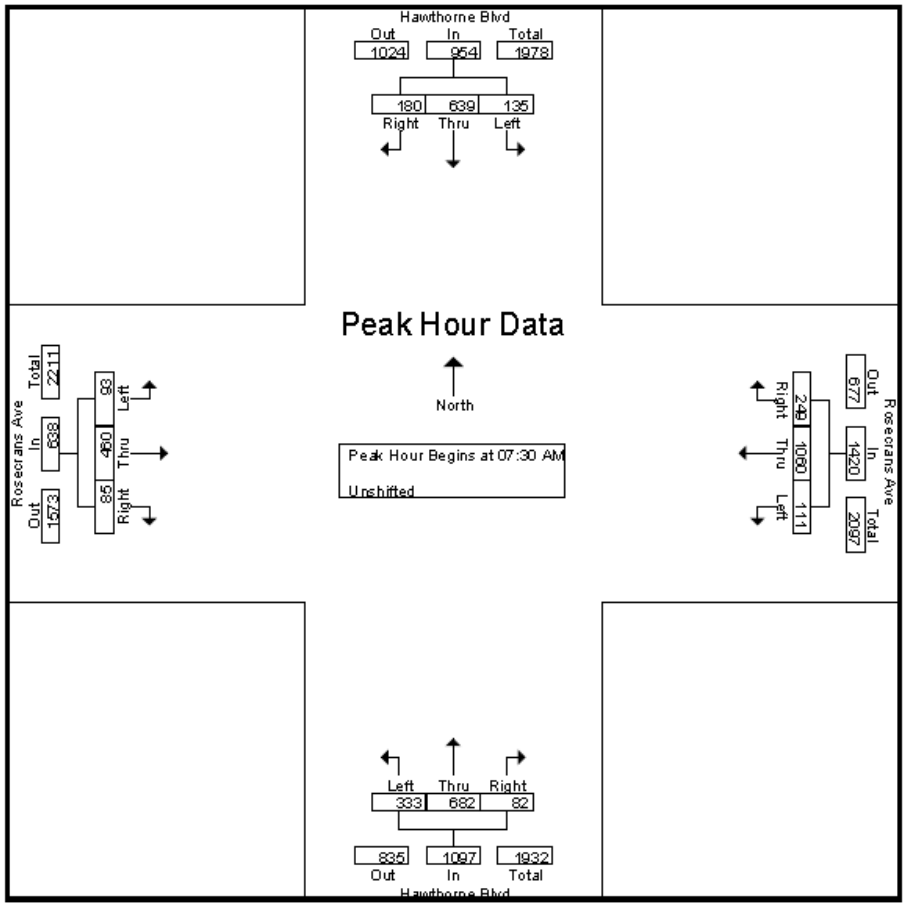

CITY TRAFFIC COUNTERS

626.991.7522

www.ctcounters.com

File Name : Rosecrans_Hawthorne_Thurs
Site Code : 00000000
Start Date : 2/19/2015
Page No : 3

	Hawthorne Blvd Southbound				Rosecrans Ave Westbound				Hawthorne Blvd Northbound				Rosecrans Ave Eastbound				
Start Time	Left	Thru	Right	App. Total	Left	Thru	Right	App. Total	Left	Thru	Right	App. Total	Left	Thru	Right	App. Total	Int. Total
Peak Hour Analysis From 12:00 PM to 05:45 PM - Peak 1 of 1																	
Peak Hour for Entire Intersection Begins at 05:00 PM																	
05:00 PM	84	251	42	377	38	**196**	29	**263**	40	216	42	298	31	253	41	325	1263
05:15 PM	92	**281**	31	**404**	35	144	**40**	219	**67**	**226**	34	**327**	30	281	**46**	357	**1307**
05:30 PM	**98**	243	39	380	36	169	22	227	47	222	**45**	314	**39**	**304**	42	**385**	1306
05:45 PM	75	279	**47**	401	**41**	177	20	238	47	220	41	308	23	288	37	348	1295
Total Volume	349	1054	159	1562	150	686	111	947	201	884	162	1247	123	1126	166	1415	5171
% App. Total	22.3	67.5	10.2		15.8	72.4	11.7		16.1	70.9	13		8.7	79.6	11.7		
PHF	.890	.938	.846	.967	.915	.875	.694	.900	.750	.978	.900	.953	.788	.926	.902	.919	.989

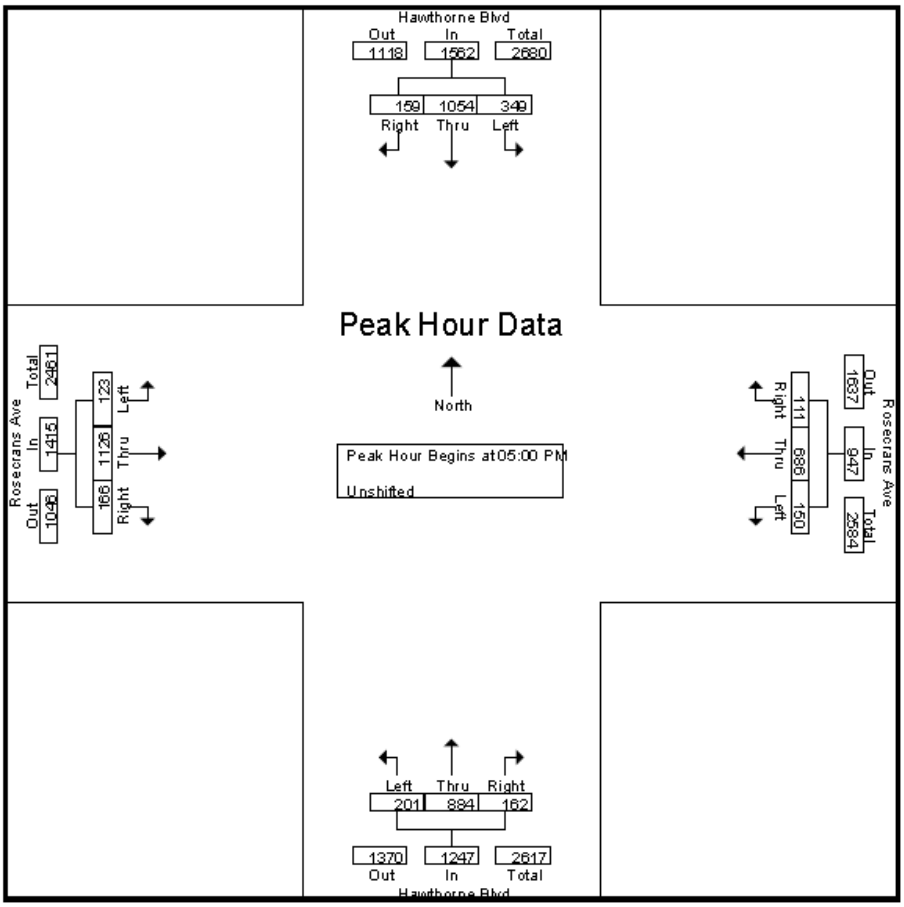

CITY TRAFFIC COUNTERS

626.991.7522

www.ctcounters.com

File Name : Rosecrans_Hawthorne_Sat
Site Code : 00000000
Start Date : 2/21/2015
Page No : 1

Groups Printed- Unshifted

	Hawthorne Blvd Southbound			Rosecrans Ave Westbound			Hawthorne Blvd Northbound			Rosecrans Ave Eastbound			
Start Time	Left	Thru	Right	Left	Thru	Right	Left	Thru	Right	Left	Thru	Right	Int. Total
11:00 AM	45	182	45	44	165	34	36	138	35	53	168	38	983
11:15 AM	51	181	46	47	167	27	43	208	30	39	160	21	1020
11:30 AM	39	155	68	28	168	35	72	210	54	43	178	26	1076
11:45 AM	60	193	56	16	136	31	73	217	32	42	195	29	1080
Total	195	711	215	135	636	127	224	773	151	177	701	114	4159
12:00 PM	50	144	50	35	189	31	62	202	23	55	279	52	1172
12:15 PM	31	190	52	53	175	41	47	166	53	45	223	44	1120
12:30 PM	58	188	47	31	141	24	70	177	56	41	190	34	1057
12:45 PM	40	181	59	34	160	37	79	198	27	46	214	32	1107
Total	179	703	208	153	665	133	258	743	159	187	906	162	4456
Grand Total	374	1414	423	288	1301	260	482	1516	310	364	1607	276	8615
Apprch %	16.9	64	19.1	15.6	70.4	14.1	20.9	65.7	13.4	16.2	71.5	12.3	
Total %	4.3	16.4	4.9	3.3	15.1	3	5.6	17.6	3.6	4.2	18.7	3.2	

CITY TRAFFIC COUNTERS

626.991.7522

www.ctcounters.com

File Name : Rosecrans_Hawthorne_Sat
Site Code : 00000000
Start Date : 2/21/2015
Page No : 2

	Hawthorne Blvd Southbound				Rosecrans Ave Westbound				Hawthorne Blvd Northbound				Rosecrans Ave Eastbound				
Start Time	Left	Thru	Right	App. Total	Left	Thru	Right	App. Total	Left	Thru	Right	App. Total	Left	Thru	Right	App. Total	Int. Total
Peak Hour Analysis From 11:00 AM to 12:45 PM - Peak 1 of 1																	
Peak Hour for Entire Intersection Begins at 12:00 PM																	
12:00 PM	50	144	50	244	35	**189**	31	255	62	**202**	23	287	**55**	**279**	**52**	**386**	**1172**
12:15 PM	31	**190**	52	273	**53**	175	**41**	**269**	47	166	53	266	45	223	44	312	1120
12:30 PM	**58**	188	47	**293**	31	141	24	196	70	177	**56**	303	41	190	34	265	1057
12:45 PM	40	181	**59**	280	34	160	37	231	**79**	198	27	**304**	46	214	32	292	1107
Total Volume	179	703	208	1090	153	665	133	951	258	743	159	1160	187	906	162	1255	4456
% App. Total	16.4	64.5	19.1		16.1	69.9	14		22.2	64.1	13.7		14.9	72.2	12.9		
PHF	.772	.925	.881	.930	.722	.880	.811	.884	.816	.920	.710	.954	.850	.812	.779	.813	.951

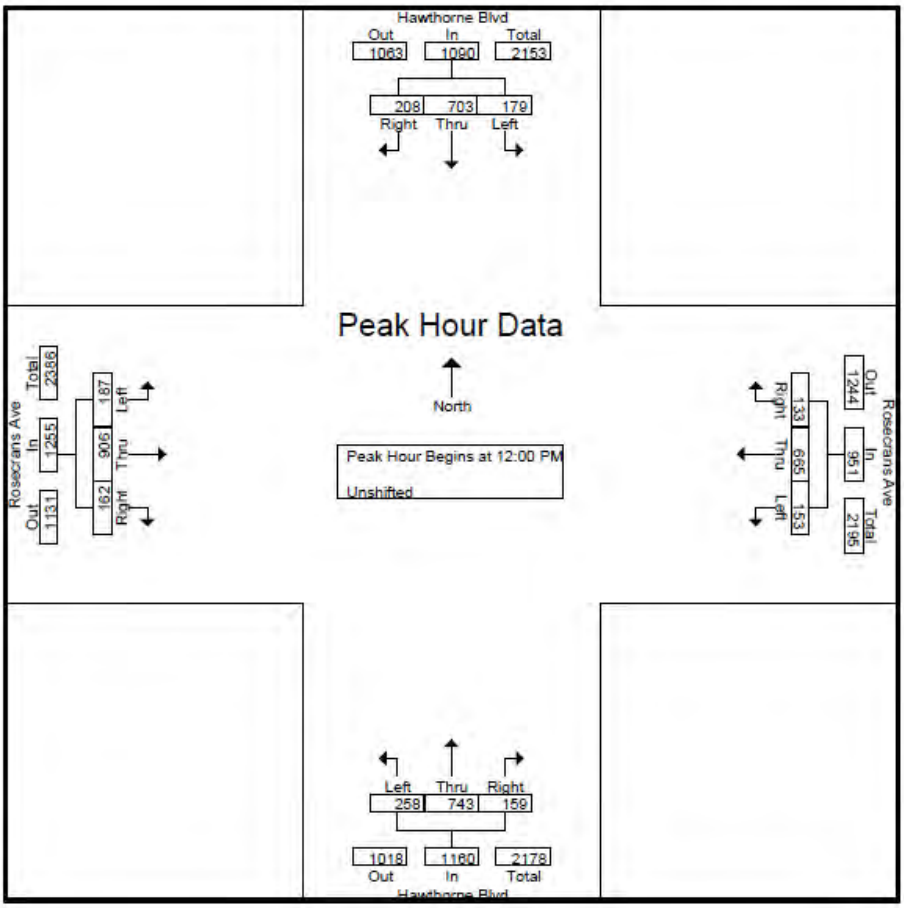

INGLEWOOD AVENUE AND IMPERIAL HIGHWAY

CITY TRAFFIC COUNTERS

626.991.7522

www.ctcounters.com

File Name : Imperial_Inglewood_Wed
Site Code : 00000000
Start Date : 2/18/2015
Page No : 1

Groups Printed- Unshifted

	Inglewood Ave Southbound			Imperial Hwy Westbound			Inglewood Ave Northbound			Imperial Hwy Eastbound			
Start Time	Left	Thru	Right	Left	Thru	Right	Left	Thru	Right	Left	Thru	Right	Int. Total
07:00 AM	23	68	17	13	319	21	54	59	37	15	63	8	697
07:15 AM	23	84	27	20	341	36	47	82	32	20	63	6	781
07:30 AM	41	103	39	50	377	64	43	98	33	9	91	8	956
07:45 AM	46	117	42	34	384	115	34	96	19	19	85	11	1002
Total	133	372	125	117	1421	236	178	335	121	63	302	33	3436
08:00 AM	49	118	18	45	325	81	30	88	31	26	74	9	894
08:15 AM	40	99	27	43	317	25	42	96	31	13	84	6	823
08:30 AM	27	100	26	43	271	30	42	95	39	32	81	5	791
08:45 AM	27	121	21	38	240	25	36	86	41	25	54	6	720
Total	143	438	92	169	1153	161	150	365	142	96	293	26	3228
04:00 PM	22	120	15	15	80	46	16	101	20	77	389	17	918
04:15 PM	31	124	16	21	120	51	18	84	24	66	424	25	1004
04:30 PM	23	117	11	24	114	53	19	91	21	83	437	42	1035
04:45 PM	29	125	13	17	115	38	24	113	22	75	414	26	1011
Total	105	486	55	77	429	188	77	389	87	301	1664	110	3968
05:00 PM	37	125	9	26	111	53	18	77	25	69	430	25	1005
05:15 PM	28	132	11	15	131	53	17	136	29	67	426	26	1071
05:30 PM	34	135	7	23	99	44	11	124	36	77	450	25	1065
05:45 PM	38	162	14	18	115	47	12	94	37	68	416	17	1038
Total	137	554	41	82	456	197	58	431	127	281	1722	93	4179
Grand Total	518	1850	313	445	3459	782	463	1520	477	741	3981	262	14811
Apprch %	19.3	69	11.7	9.5	73.8	16.7	18.8	61.8	19.4	14.9	79.9	5.3	
Total %	3.5	12.5	2.1	3	23.4	5.3	3.1	10.3	3.2	5	26.9	1.8	

CITY TRAFFIC COUNTERS

626.991.7522

www.ctcounters.com

File Name : Imperial_Inglewood_Wed
Site Code : 00000000
Start Date : 2/18/2015
Page No : 2

	Inglewood Ave Southbound				Imperial Hwy Westbound				Inglewood Ave Northbound				Imperial Hwy Eastbound				
Start Time	Left	Thru	Right	App. Total	Left	Thru	Right	App. Total	Left	Thru	Right	App. Total	Left	Thru	Right	App. Total	Int. Total
Peak Hour Analysis From 07:00 AM to 11:45 AM - Peak 1 of 1																	
Peak Hour for Entire Intersection Begins at 07:30 AM																	
07:30 AM	41	103	39	183	**50**	377	64	491	**43**	**98**	**33**	**174**	9	**91**	8	108	956
07:45 AM	46	117	**42**	**205**	34	**384**	**115**	**533**	34	96	19	149	19	85	**11**	**115**	**1002**
08:00 AM	**49**	**118**	18	185	45	325	81	451	30	88	31	149	**26**	74	9	109	894
08:15 AM	40	99	27	166	43	317	25	385	42	96	31	169	13	84	6	103	823
Total Volume	176	437	126	739	172	1403	285	1860	149	378	114	641	67	334	34	435	3675
% App. Total	23.8	59.1	17.1		9.2	75.4	15.3		23.2	59	17.8		15.4	76.8	7.8		
PHF	.898	.926	.750	.901	.860	.913	.620	.872	.866	.964	.864	.921	.644	.918	.773	.946	.917

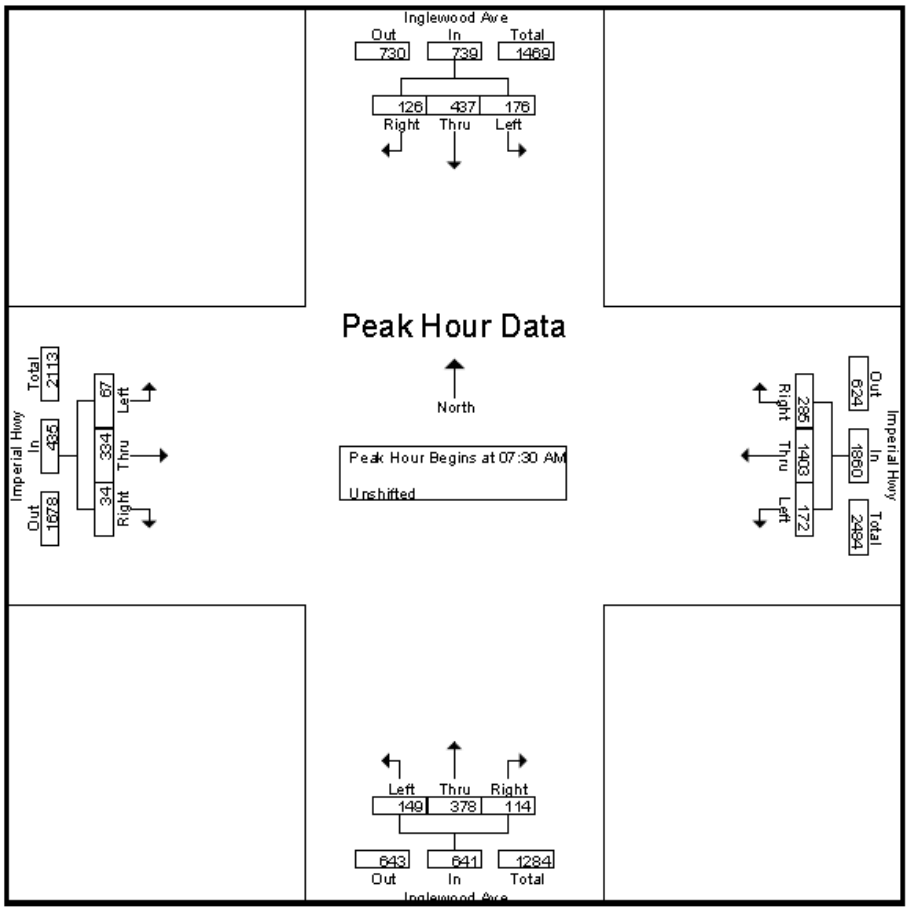

CITY TRAFFIC COUNTERS

626.991.7522

www.ctcounters.com

File Name : Imperial_Inglewood_Wed
Site Code : 00000000
Start Date : 2/18/2015
Page No : 3

	Inglewood Ave Southbound				Imperial Hwy Westbound				Inglewood Ave Northbound				Imperial Hwy Eastbound				
Start Time	Left	Thru	Right	App. Total	Left	Thru	Right	App. Total	Left	Thru	Right	App. Total	Left	Thru	Right	App. Total	Int. Total
Peak Hour Analysis From 12:00 PM to 05:45 PM - Peak 1 of 1																	
Peak Hour for Entire Intersection Begins at 05:00 PM																	
05:00 PM	37	125	9	171	**26**	111	**53**	190	**18**	77	25	120	69	430	25	524	1005
05:15 PM	28	132	11	171	15	**131**	53	**199**	17	**136**	29	**182**	67	426	**26**	519	**1071**
05:30 PM	34	135	7	176	23	99	44	166	11	124	36	171	**77**	**450**	25	**552**	1065
05:45 PM	**38**	**162**	**14**	**214**	18	115	47	180	12	94	**37**	143	68	416	17	501	1038
Total Volume	137	554	41	732	82	456	197	735	58	431	127	616	281	1722	93	2096	4179
% App. Total	18.7	75.7	5.6		11.2	62	26.8		9.4	70	20.6		13.4	82.2	4.4		
PHF	.901	.855	.732	.855	.788	.870	.929	.923	.806	.792	.858	.846	.912	.957	.894	.949	.975

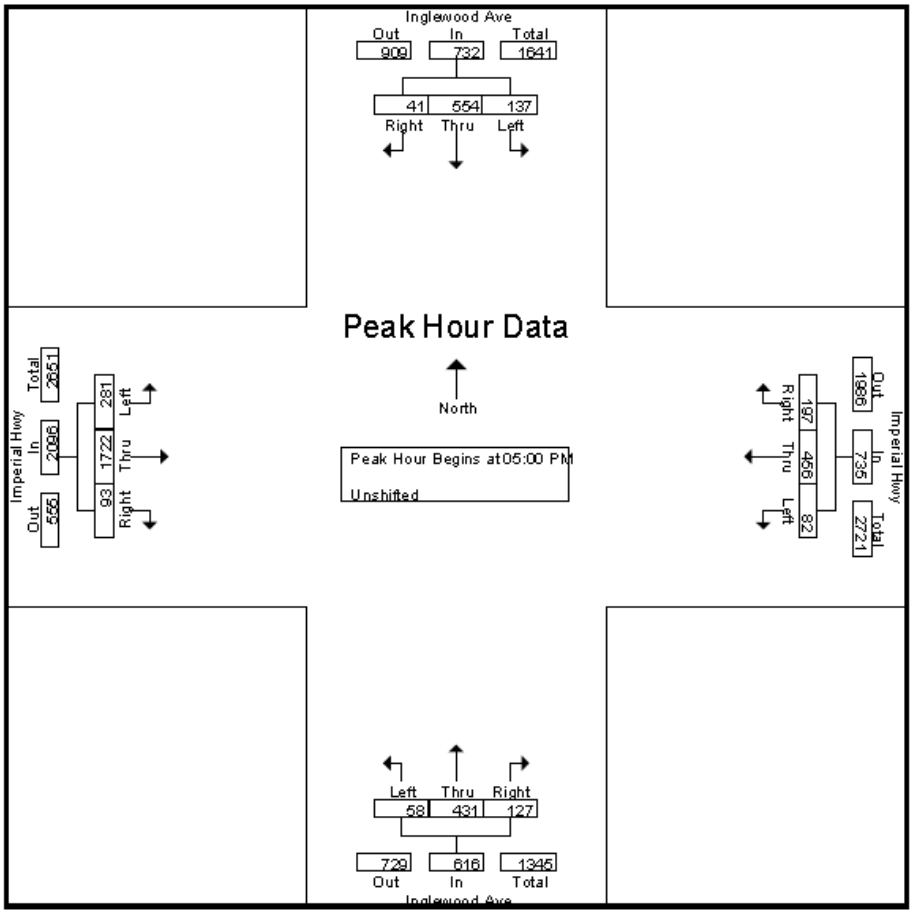

CITY TRAFFIC COUNTERS

626.991.7522

www.ctcounters.com

File Name : Imperial_Inglewood
Site Code : 00000000
Start Date : 2/14/2015
Page No : 1

Groups Printed- Unshifted

	Inglewood Ave Southbound			Imperial Hwy Westbound			Inglewood Ave Northbound			Imperial Hwy Eastbound			
Start Time	Left	Thru	Right	Left	Thru	Right	Left	Thru	Right	Left	Thru	Right	Int. Total
11:00 AM	36	84	20	24	76	46	27	112	33	18	57	16	549
11:15 AM	33	78	18	34	95	48	45	109	38	13	69	15	595
11:30 AM	24	94	26	37	105	43	47	141	43	19	76	13	668
11:45 AM	35	95	20	25	103	41	49	148	48	21	91	7	683
Total	128	351	84	120	379	178	168	510	162	71	293	51	2495
12:00 PM	41	94	12	30	122	37	40	108	48	30	68	10	640
12:15 PM	27	76	17	40	147	45	37	135	42	29	90	9	694
12:30 PM	33	81	28	34	130	43	25	118	37	32	104	11	676
12:45 PM	29	105	16	17	124	37	18	104	34	40	108	18	650
Total	130	356	73	121	523	162	120	465	161	131	370	48	2660
Grand Total	258	707	157	241	902	340	288	975	323	202	663	99	5155
Apprch %	23	63	14	16.3	60.8	22.9	18.2	61.5	20.4	21	68.8	10.3	
Total %	5	13.7	3	4.7	17.5	6.6	5.6	18.9	6.3	3.9	12.9	1.9	

CITY TRAFFIC COUNTERS

626.991.7522

www.ctcounters.com

File Name : Imperial_Inglewood
Site Code : 00000000
Start Date : 2/14/2015
Page No : 2

	Inglewood Ave Southbound				Imperial Hwy Westbound				Inglewood Ave Northbound				Imperial Hwy Eastbound				
Start Time	Left	Thru	Right	App. Total	Left	Thru	Right	App. Total	Left	Thru	Right	App. Total	Left	Thru	Right	App. Total	Int. Total
Peak Hour Analysis From 11:00 AM to 12:45 PM - Peak 1 of 1																	
Peak Hour for Entire Intersection Begins at 11:45 AM																	
11:45 AM	35	**95**	20	**150**	25	103	41	169	**49**	**148**	**48**	**245**	21	91	7	119	683
12:00 PM	**41**	94	12	147	30	122	37	189	40	108	48	196	30	68	10	108	640
12:15 PM	27	76	17	120	**40**	**147**	**45**	**232**	37	135	42	214	29	90	9	128	**694**
12:30 PM	33	81	**28**	142	34	130	43	207	25	118	37	180	**32**	**104**	**11**	**147**	676
Total Volume	136	346	77	559	129	502	166	797	151	509	175	835	112	353	37	502	2693
% App. Total	24.3	61.9	13.8		16.2	63	20.8		18.1	61	21		22.3	70.3	7.4		
PHF	.829	.911	.688	.932	.806	.854	.922	.859	.770	.860	.911	.852	.875	.849	.841	.854	.970

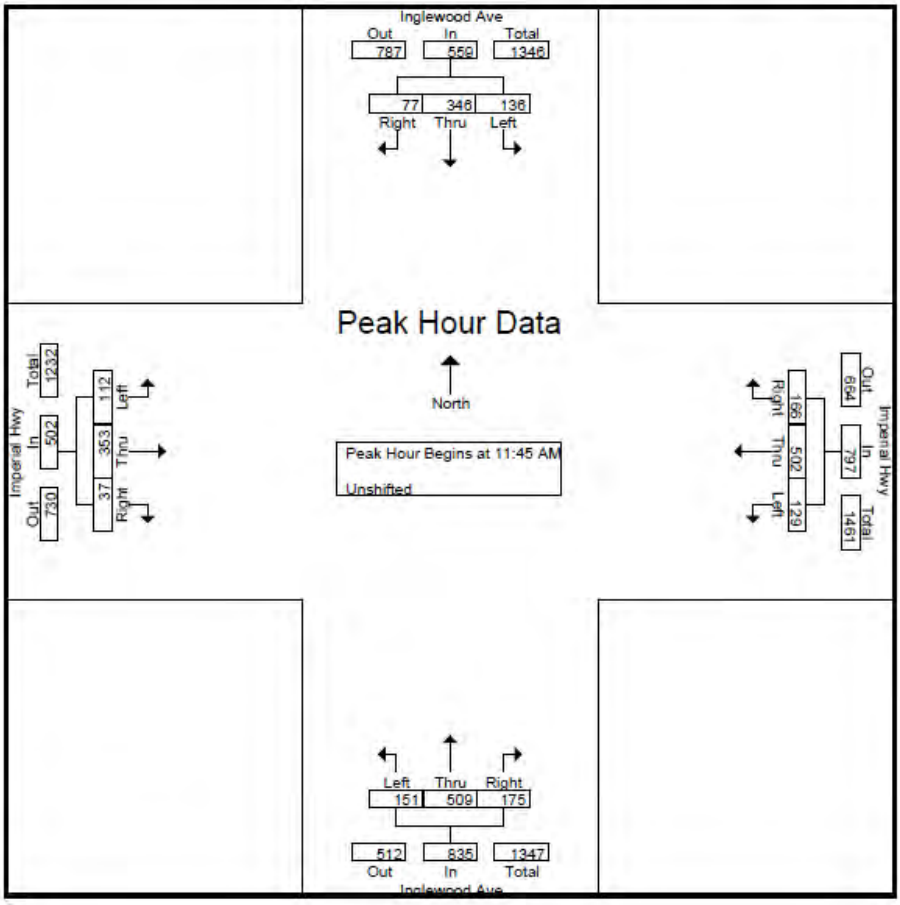

INGLEWOOD AVENUE AND EL SEGUNDO BOULEVARD

CITY TRAFFIC COUNTERS

626.991.7522

www.ctcounters.com

File Name : Segundo_Inglewood_Thurs
Site Code : 00000000
Start Date : 2/19/2015
Page No : 1

Groups Printed- Unshifted

	Inglewood Ave Southbound			El Segundo Blvd Westbound			Inglewood Ave Northbound			El Segundo Blvd Eastbound			
Start Time	Left	Thru	Right	Left	Thru	Right	Left	Thru	Right	Left	Thru	Right	Int. Total
07:00 AM	14	90	27	25	293	34	66	115	8	13	81	14	780
07:15 AM	13	82	26	24	231	29	57	111	25	16	77	21	712
07:30 AM	17	150	23	38	256	40	29	170	18	26	82	22	871
07:45 AM	34	185	42	52	255	40	32	198	17	42	127	24	1048
Total	78	507	118	139	1035	143	184	594	68	97	367	81	3411
08:00 AM	19	175	36	36	278	39	29	224	26	47	174	28	1111
08:15 AM	33	137	24	36	241	32	55	219	23	31	161	31	1023
08:30 AM	16	152	26	38	258	35	61	172	23	39	171	19	1010
08:45 AM	23	115	20	20	214	23	47	162	25	29	158	23	859
Total	91	579	106	130	991	129	192	777	97	146	664	101	4003
04:00 PM	28	197	17	55	129	39	32	127	23	59	320	89	1115
04:15 PM	26	188	22	44	151	42	17	146	33	53	381	75	1178
04:30 PM	31	201	18	52	110	25	28	162	42	51	363	103	1186
04:45 PM	31	205	19	46	138	35	12	136	34	67	404	73	1200
Total	116	791	76	197	528	141	89	571	132	230	1468	340	4679
05:00 PM	32	191	18	70	137	48	24	178	39	56	401	91	1285
05:15 PM	30	217	15	51	142	38	20	160	36	54	421	73	1257
05:30 PM	31	277	22	52	147	28	23	183	38	73	405	87	1366
05:45 PM	34	232	28	40	118	28	27	136	36	53	418	79	1229
Total	127	917	83	213	544	142	94	657	149	236	1645	330	5137
Grand Total	412	2794	383	679	3098	555	559	2599	446	709	4144	852	17230
Apprch %	11.5	77.8	10.7	15.7	71.5	12.8	15.5	72.1	12.4	12.4	72.6	14.9	
Total %	2.4	16.2	2.2	3.9	18	3.2	3.2	15.1	2.6	4.1	24.1	4.9	

CITY TRAFFIC COUNTERS

626.991.7522

www.ctcounters.com

File Name : Segundo_Inglewood_Thurs
Site Code : 00000000
Start Date : 2/19/2015
Page No : 2

	Inglewood Ave Southbound				El Segundo Blvd Westbound				Inglewood Ave Northbound				El Segundo Blvd Eastbound				
Start Time	Left	Thru	Right	App. Total	Left	Thru	Right	App. Total	Left	Thru	Right	App. Total	Left	Thru	Right	App. Total	Int. Total
Peak Hour Analysis From 07:00 AM to 11:45 AM - Peak 1 of 1																	
Peak Hour for Entire Intersection Begins at 07:45 AM																	
07:45 AM	**34**	**185**	**42**	**261**	**52**	255	**40**	347	32	198	17	247	42	127	24	193	1048
08:00 AM	19	175	36	230	36	**278**	39	**353**	29	**224**	**26**	279	**47**	**174**	28	**249**	**1111**
08:15 AM	33	137	24	194	36	241	32	309	55	219	23	**297**	31	161	**31**	223	1023
08:30 AM	16	152	26	194	38	258	35	331	**61**	172	23	256	39	171	19	229	1010
Total Volume	102	649	128	879	162	1032	146	1340	177	813	89	1079	159	633	102	894	4192
% App. Total	11.6	73.8	14.6		12.1	77	10.9		16.4	75.3	8.2		17.8	70.8	11.4		
PHF	.750	.877	.762	.842	.779	.928	.913	.949	.725	.907	.856	.908	.846	.909	.823	.898	.943

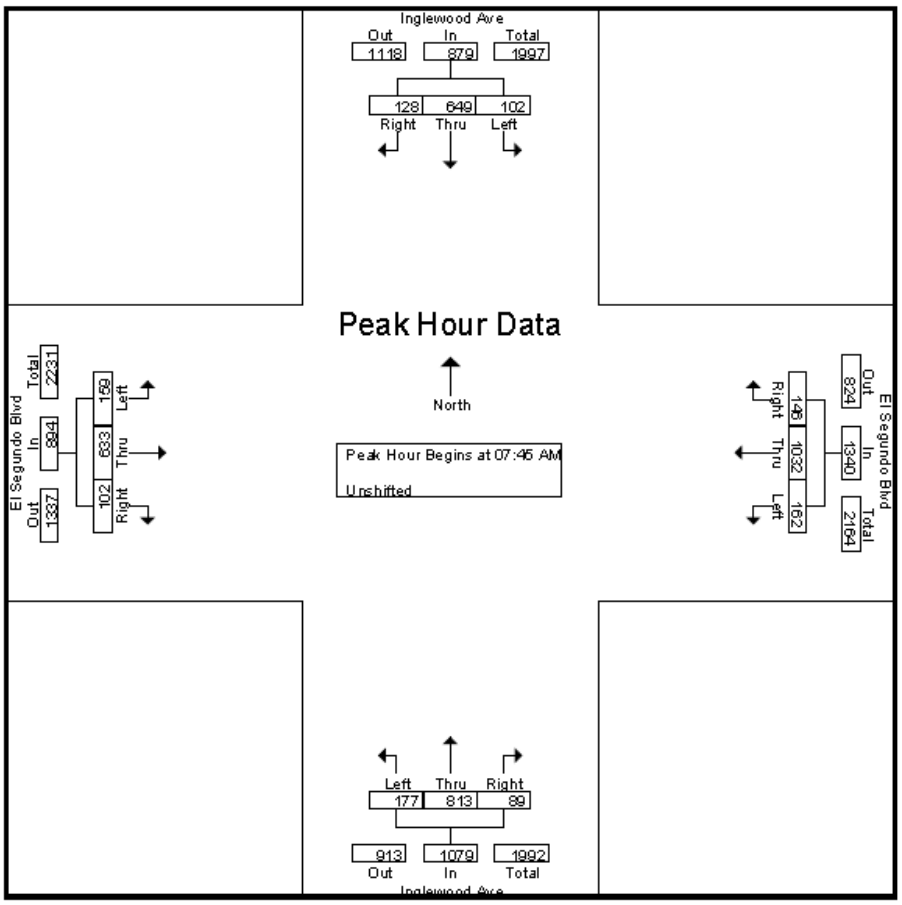

CITY TRAFFIC COUNTERS

626.991.7522

www.ctcounters.com

File Name : Segundo_Inglewood_Thurs
Site Code : 00000000
Start Date : 2/19/2015
Page No : 3

	Inglewood Ave Southbound				El Segundo Blvd Westbound				Inglewood Ave Northbound				El Segundo Blvd Eastbound				
Start Time	Left	Thru	Right	App. Total	Left	Thru	Right	App. Total	Left	Thru	Right	App. Total	Left	Thru	Right	App. Total	Int. Total
Peak Hour Analysis From 12:00 PM to 05:45 PM - Peak 1 of 1																	
Peak Hour for Entire Intersection Begins at 05:00 PM																	
05:00 PM	32	191	18	241	**70**	137	**48**	**255**	24	178	**39**	241	56	401	**91**	548	1285
05:15 PM	30	217	15	262	51	142	38	231	20	160	36	216	54	**421**	73	548	1257
05:30 PM	31	**277**	22	**330**	52	**147**	28	227	23	**183**	38	**244**	**73**	405	87	**565**	**1366**
05:45 PM	**34**	232	**28**	294	40	118	28	186	**27**	136	36	199	53	418	79	550	1229
Total Volume	127	917	83	1127	213	544	142	899	94	657	149	900	236	1645	330	2211	5137
% App. Total	11.3	81.4	7.4		23.7	60.5	15.8		10.4	73	16.6		10.7	74.4	14.9		
PHF	.934	.828	.741	.854	.761	.925	.740	.881	.870	.898	.955	.922	.808	.977	.907	.978	.940

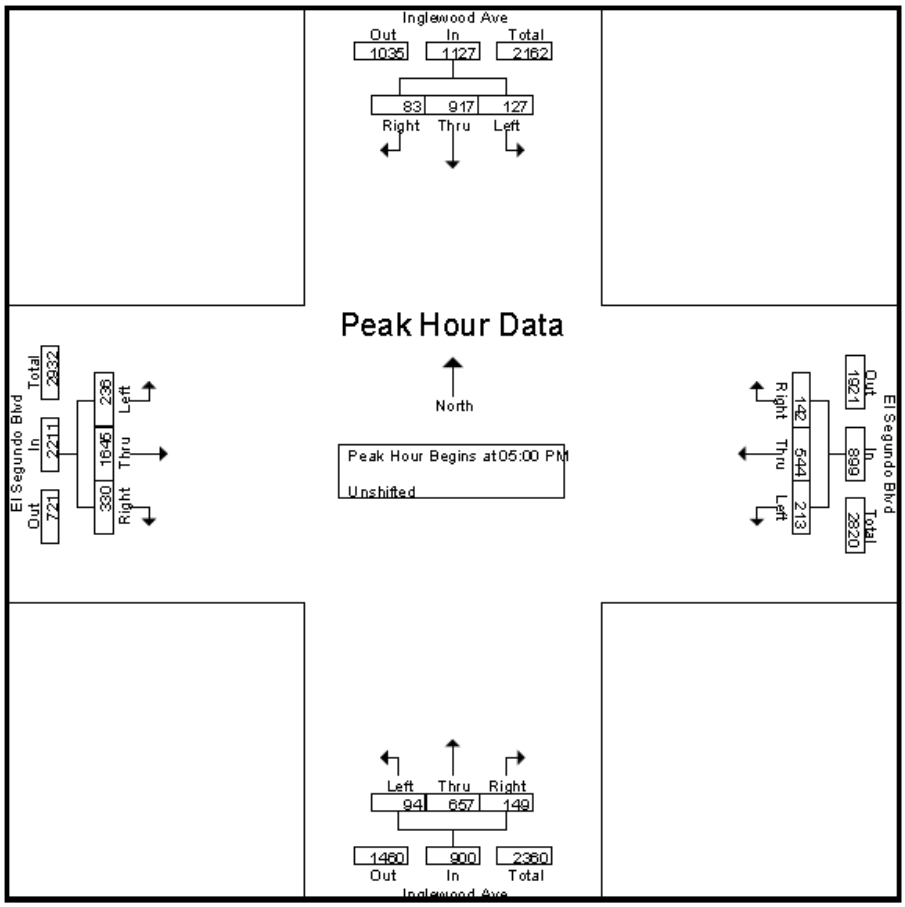

CITY TRAFFIC COUNTERS

626.991.7522

www.ctcounters.com

File Name : Segundo_Inglewood_Sat
Site Code : 00000000
Start Date : 2/21/2015
Page No : 1

Groups Printed- Unshifted

	Inglewood Ave Southbound			El Segundo Blvd Westbound			Inglewood Ave Northbound			El Segundo Blvd Eastbound			
Start Time	Left	Thru	Right	Left	Thru	Right	Left	Thru	Right	Left	Thru	Right	Int. Total
11:00 AM	17	136	20	34	130	23	39	105	25	26	111	34	700
11:15 AM	21	114	18	38	128	33	30	101	33	40	125	26	707
11:30 AM	29	143	22	44	115	38	34	138	35	29	104	30	761
11:45 AM	41	119	23	45	112	43	28	115	32	46	112	33	749
Total	108	512	83	161	485	137	131	459	125	141	452	123	2917
12:00 PM	29	138	32	43	136	34	26	150	31	32	119	40	810
12:15 PM	37	137	12	45	164	39	36	144	38	35	134	39	860
12:30 PM	35	139	14	46	133	39	39	155	40	34	114	38	826
12:45 PM	24	134	14	51	145	27	27	136	33	34	124	35	784
Total	125	548	72	185	578	139	128	585	142	135	491	152	3280
Grand Total	233	1060	155	346	1063	276	259	1044	267	276	943	275	6197
Apprch %	16.1	73.2	10.7	20.5	63.1	16.4	16.5	66.5	17	18.5	63.1	18.4	
Total %	3.8	17.1	2.5	5.6	17.2	4.5	4.2	16.8	4.3	4.5	15.2	4.4	

CITY TRAFFIC COUNTERS

626.991.7522

www.ctcounters.com

File Name : Segundo_Inglewood_Sat
Site Code : 00000000
Start Date : 2/21/2015
Page No : 2

	Inglewood Ave Southbound				El Segundo Blvd Westbound				Inglewood Ave Northbound				El Segundo Blvd Eastbound				
Start Time	Left	Thru	Right	App. Total	Left	Thru	Right	App. Total	Left	Thru	Right	App. Total	Left	Thru	Right	App. Total	Int. Total
Peak Hour Analysis From 11:00 AM to 12:45 PM - Peak 1 of 1																	
Peak Hour for Entire Intersection Begins at 12:00 PM																	
12:00 PM	29	138	**32**	**199**	43	136	34	213	26	150	31	207	32	119	**40**	191	810
12:15 PM	**37**	137	12	186	45	**164**	**39**	**248**	36	144	38	218	**35**	**134**	39	**208**	**860**
12:30 PM	35	**139**	14	188	**46**	133	39	218	**39**	**155**	**40**	**234**	34	114	38	186	826
12:45 PM	24	134	14	172	**51**	145	27	223	27	136	33	196	34	124	35	193	784
Total Volume	125	548	72	745	185	578	139	902	128	585	142	855	135	491	152	778	3280
% App. Total	16.8	73.6	9.7		20.5	64.1	15.4		15	68.4	16.6		17.4	63.1	19.5		
PHF	.845	.986	.563	.936	.907	.881	.891	.909	.821	.944	.888	.913	.964	.916	.950	.935	.953

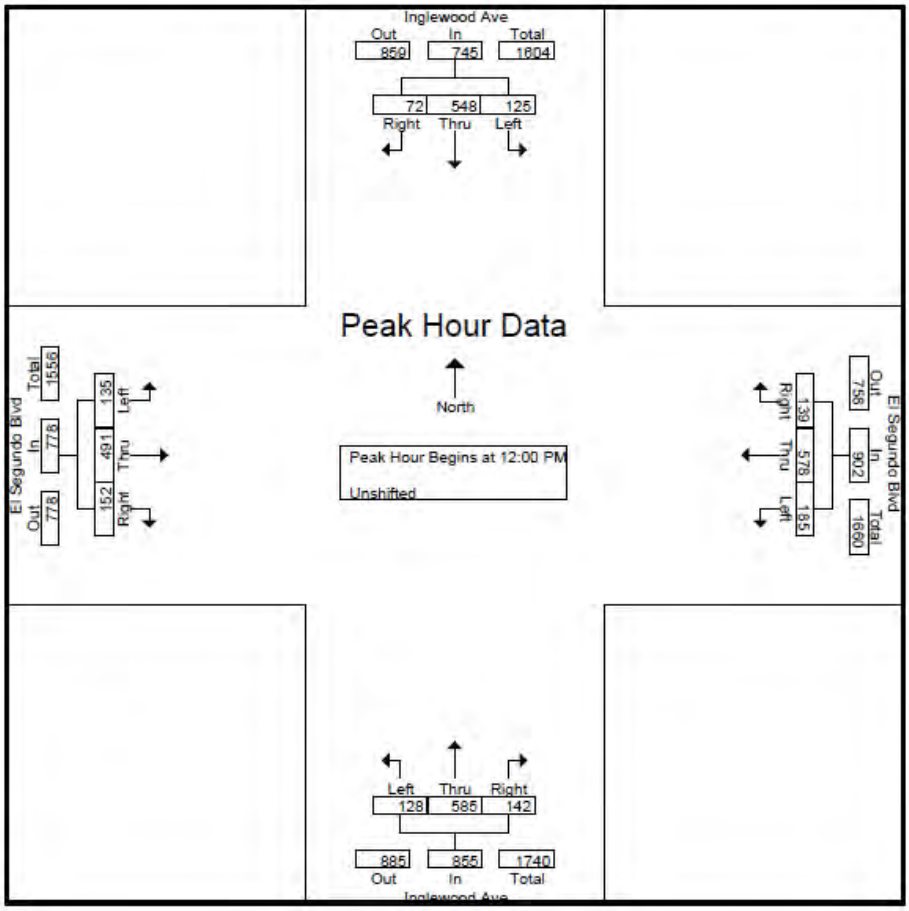

INGLEWOOD AVENUE AND ROSECRANS AVENUE

CITY TRAFFIC COUNTERS

626.991.7522

www.ctcounters.com

File Name : Rosecrans_Inglewood_Thurs
Site Code : 00000000
Start Date : 2/19/2015
Page No : 1

Groups Printed- Unshifted

	Inglewood Ave Southbound			Rosecrans Ave Westbound			Inglewood Ave Northbound			Rosecrans Ave Eastbound			
Start Time	Left	Thru	Right	Left	Thru	Right	Left	Thru	Right	Left	Thru	Right	Int. Total
07:00 AM	17	96	16	24	213	20	43	72	11	13	46	7	578
07:15 AM	26	151	40	34	294	44	64	124	20	17	55	14	883
07:30 AM	32	273	45	66	348	39	44	154	47	17	83	13	1161
07:45 AM	69	201	55	67	415	50	65	155	77	25	77	13	1269
Total	144	721	156	191	1270	153	216	505	155	72	261	47	3891
08:00 AM	42	194	41	47	320	43	71	180	48	24	104	8	1122
08:15 AM	58	162	44	33	330	32	68	119	33	27	71	18	995
08:30 AM	40	171	49	50	282	43	61	134	27	30	100	18	1005
08:45 AM	51	128	37	44	256	29	65	112	14	28	77	18	859
Total	191	655	171	174	1188	147	265	545	122	109	352	62	3981
04:00 PM	73	222	35	45	188	38	50	149	33	71	270	43	1217
04:15 PM	91	198	28	44	197	26	41	148	42	65	258	35	1173
04:30 PM	72	196	34	41	199	37	31	133	43	57	278	43	1164
04:45 PM	71	220	41	54	177	51	29	150	27	64	273	38	1195
Total	307	836	138	184	761	152	151	580	145	257	1079	159	4749
05:00 PM	80	273	34	61	187	37	36	157	40	64	297	48	1314
05:15 PM	78	216	36	40	190	55	45	151	38	49	305	42	1245
05:30 PM	87	208	46	47	168	34	29	171	46	58	283	25	1202
05:45 PM	81	236	37	52	204	43	40	153	41	49	277	33	1246
Total	326	933	153	200	749	169	150	632	165	220	1162	148	5007
Grand Total	968	3145	618	749	3968	621	782	2262	587	658	2854	416	17628
Apprch %	20.5	66.5	13.1	14	74.3	11.6	21.5	62.3	16.2	16.8	72.7	10.6	
Total %	5.5	17.8	3.5	4.2	22.5	3.5	4.4	12.8	3.3	3.7	16.2	2.4	

CITY TRAFFIC COUNTERS

626.991.7522

www.ctcounters.com

File Name : Rosecrans_Inglewood_Thurs
Site Code : 00000000
Start Date : 2/19/2015
Page No : 2

	Inglewood Ave Southbound				Rosecrans Ave Westbound				Inglewood Ave Northbound				Rosecrans Ave Eastbound				
Start Time	Left	Thru	Right	App. Total	Left	Thru	Right	App. Total	Left	Thru	Right	App. Total	Left	Thru	Right	App. Total	Int. Total
Peak Hour Analysis From 07:00 AM to 11:45 AM - Peak 1 of 1																	
Peak Hour for Entire Intersection Begins at 07:30 AM																	
07:30 AM	32	**273**	45	**350**	66	348	39	453	44	154	47	245	17	83	13	113	1161
07:45 AM	**69**	201	**55**	325	**67**	**415**	**50**	**532**	65	155	**77**	297	25	77	13	115	**1269**
08:00 AM	42	194	41	277	47	320	43	410	**71**	**180**	48	**299**	24	**104**	8	**136**	1122
08:15 AM	58	162	44	264	33	330	32	395	68	119	33	220	**27**	71	**18**	116	995
Total Volume	201	830	185	1216	213	1413	164	1790	248	608	205	1061	93	335	52	480	4547
% App. Total	16.5	68.3	15.2		11.9	78.9	9.2		23.4	57.3	19.3		19.4	69.8	10.8		
PHF	.728	.760	.841	.869	.795	.851	.820	.841	.873	.844	.666	.887	.861	.805	.722	.882	.896

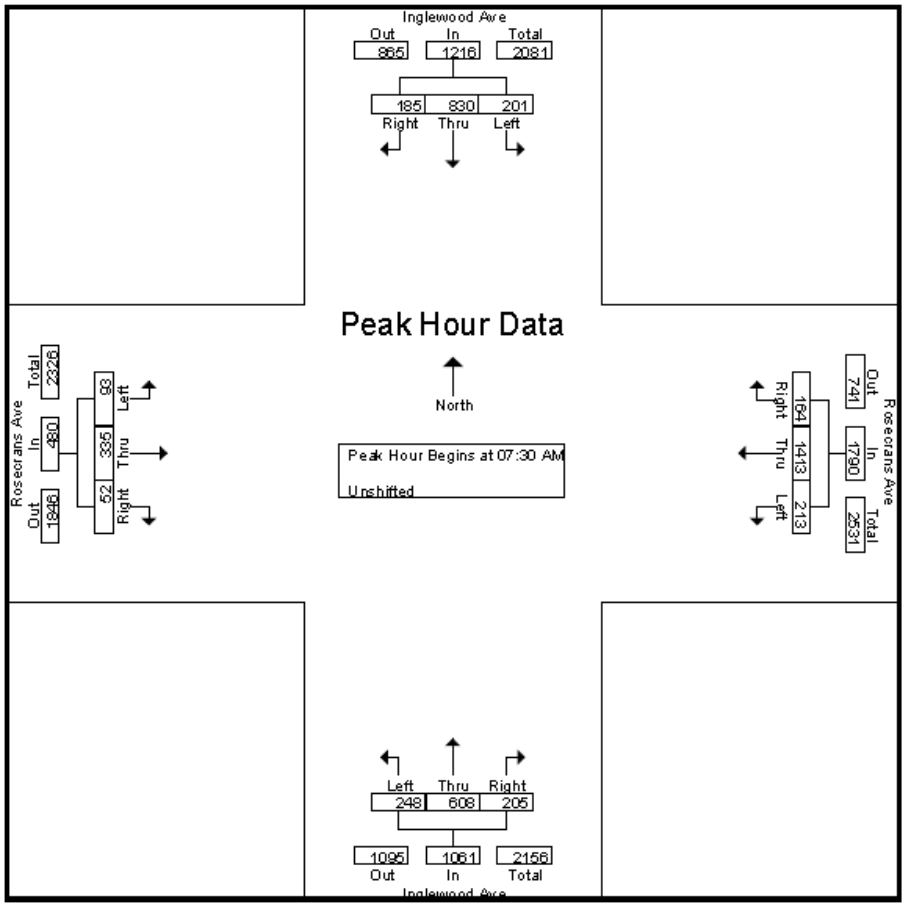

CITY TRAFFIC COUNTERS
626.991.7522
www.ctcounters.com

File Name : Rosecrans_Inglewood_Thurs
Site Code : 00000000
Start Date : 2/19/2015
Page No : 3

	Inglewood Ave Southbound				Rosecrans Ave Westbound				Inglewood Ave Northbound				Rosecrans Ave Eastbound				
Start Time	Left	Thru	Right	App. Total	Left	Thru	Right	App. Total	Left	Thru	Right	App. Total	Left	Thru	Right	App. Total	Int. Total
Peak Hour Analysis From 12:00 PM to 05:45 PM - Peak 1 of 1																	
Peak Hour for Entire Intersection Begins at 05:00 PM																	
05:00 PM	80	**273**	34	**387**	**61**	187	37	285	36	157	40	233	**64**	297	**48**	**409**	**1314**
05:15 PM	78	216	36	330	40	190	**55**	285	**45**	151	38	234	49	**305**	42	396	1245
05:30 PM	**87**	208	**46**	341	47	168	34	249	29	**171**	**46**	**246**	58	283	25	366	1202
05:45 PM	81	236	37	354	52	**204**	43	**299**	40	153	41	234	49	277	33	359	1246
Total Volume	326	933	153	1412	200	749	169	1118	150	632	165	947	220	1162	148	1530	5007
% App. Total	23.1	66.1	10.8		17.9	67	15.1		15.8	66.7	17.4		14.4	75.9	9.7		
PHF	.937	.854	.832	.912	.820	.918	.768	.935	.833	.924	.897	.962	.859	.952	.771	.935	.953

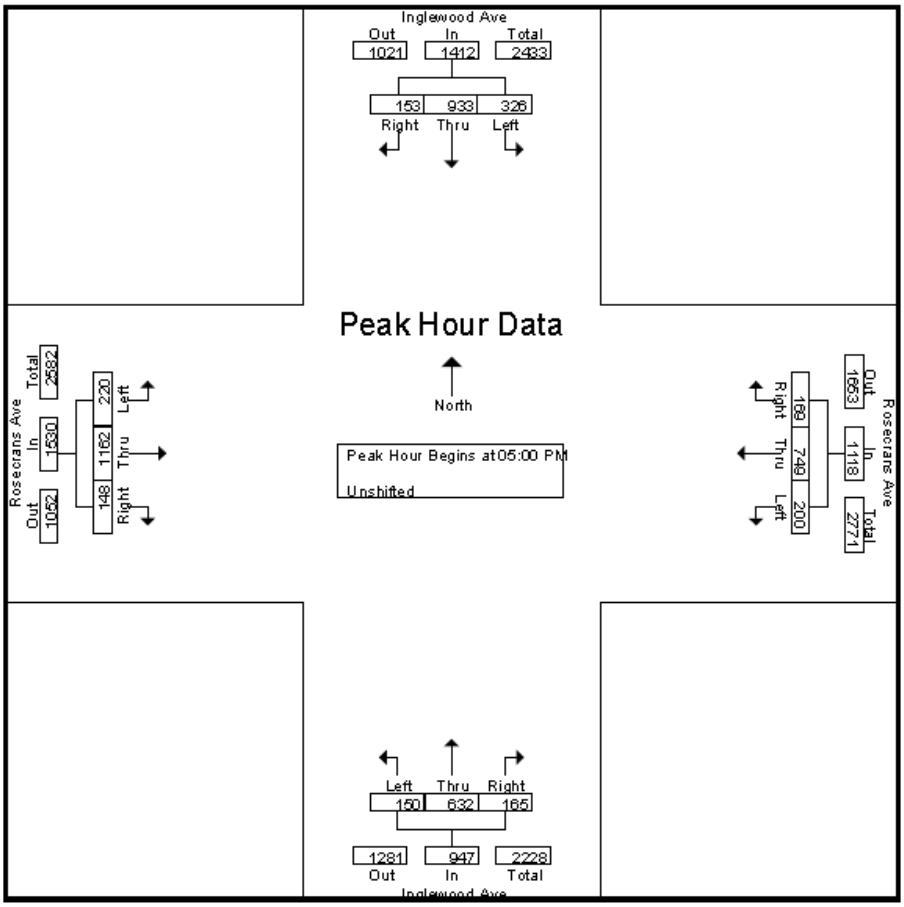

CITY TRAFFIC COUNTERS

626.991.7522

www.ctcounters.com

File Name : Rosecrans_Inglewood_Sat
Site Code : 00000000
Start Date : 2/21/2015
Page No : 1

Groups Printed- Unshifted

	Inglewood Ave Southbound			Rosecrans Ave Westbound			Inglewood Ave Northbound			Rosecrans Ave Eastbound			
Start Time	Left	Thru	Right	Left	Thru	Right	Left	Thru	Right	Left	Thru	Right	Int. Total
11:00 AM	28	144	33	44	136	35	54	107	27	34	132	22	796
11:15 AM	29	113	44	45	194	21	20	85	27	54	193	35	860
11:30 AM	52	137	61	51	252	42	50	124	38	53	168	35	1063
11:45 AM	32	116	50	47	230	26	51	110	44	65	183	45	999
Total	141	510	188	187	812	124	175	426	136	206	676	137	3718
12:00 PM	54	157	45	45	194	29	48	109	49	56	196	23	1005
12:15 PM	42	108	57	46	273	41	45	104	36	69	203	42	1066
12:30 PM	35	134	48	46	186	41	50	158	36	55	172	34	995
12:45 PM	40	126	32	76	212	45	34	114	26	85	228	49	1067
Total	171	525	182	213	865	156	177	485	147	265	799	148	4133
Grand Total	312	1035	370	400	1677	280	352	911	283	471	1475	285	7851
Apprch %	18.2	60.3	21.5	17	71.1	11.9	22.8	58.9	18.3	21.1	66.1	12.8	
Total %	4	13.2	4.7	5.1	21.4	3.6	4.5	11.6	3.6	6	18.8	3.6	

CITY TRAFFIC COUNTERS

626.991.7522

www.ctcounters.com

File Name : Rosecrans_Inglewood_Sat
Site Code : 00000000
Start Date : 2/21/2015
Page No : 2

	Inglewood Ave Southbound				Rosecrans Ave Westbound				Inglewood Ave Northbound				Rosecrans Ave Eastbound				
Start Time	Left	Thru	Right	App. Total	Left	Thru	Right	App. Total	Left	Thru	Right	App. Total	Left	Thru	Right	App. Total	Int. Total
Peak Hour Analysis From 11:00 AM to 12:45 PM - Peak 1 of 1																	
Peak Hour for Entire Intersection Begins at 11:30 AM																	
11:30 AM	52	137	**61**	250	**51**	252	**42**	345	50	**124**	38	**212**	53	168	35	256	1063
11:45 AM	32	116	50	198	47	230	26	303	**51**	110	44	205	65	183	**45**	293	999
12:00 PM	**54**	**157**	45	**256**	45	194	29	268	48	109	**49**	206	56	196	23	275	1005
12:15 PM	42	108	57	207	46	**273**	41	**360**	45	104	36	185	**69**	**203**	42	**314**	**1066**
Total Volume	180	518	213	911	189	949	138	1276	194	447	167	808	243	750	145	1138	4133
% App. Total	19.8	56.9	23.4		14.8	74.4	10.8		24	55.3	20.7		21.4	65.9	12.7		
PHF	.833	.825	.873	.890	.926	.869	.821	.886	.951	.901	.852	.953	.880	.924	.806	.906	.969

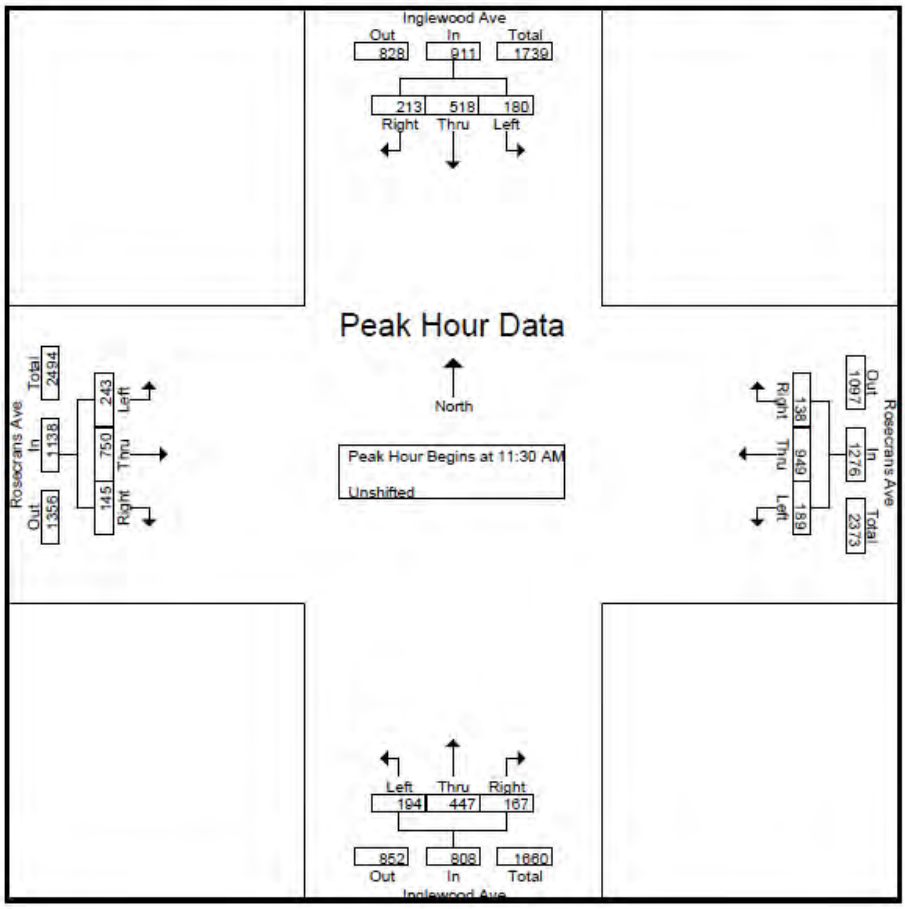

PRAIRIE AVENUE AND EL SEGUNDO BOULEVARD

CITY TRAFFIC COUNTERS

626.991.7522

www.ctcounters.com

File Name : Segundo_Prairie_Thur
Site Code : 00000000
Start Date : 2/19/2015
Page No : 1

Groups Printed- Unshifted

	Prairie Ave Southbound			El Segundo Blvd Westbound			Prairie Ave Northbound			El Segundo Blvd Eastbound			
Start Time	Left	Thru	Right	Left	Thru	Right	Left	Thru	Right	Left	Thru	Right	Int. Total
07:00 AM	38	129	15	15	218	83	65	235	22	33	68	20	941
07:15 AM	39	189	15	26	261	78	68	220	27	24	77	36	1060
07:30 AM	41	200	18	27	330	77	79	295	29	32	117	41	1286
07:45 AM	58	246	27	37	313	72	79	315	32	44	171	43	1437
Total	176	764	75	105	1122	310	291	1065	110	133	433	140	4724
08:00 AM	51	257	22	60	256	83	57	320	26	41	158	45	1376
08:15 AM	52	233	26	45	248	79	73	292	39	48	135	42	1312
08:30 AM	47	172	19	40	237	91	72	242	25	34	138	51	1168
08:45 AM	47	173	23	24	222	60	68	222	33	33	119	43	1067
Total	197	835	90	169	963	313	270	1076	123	156	550	181	4923
04:00 PM	70	211	18	29	148	75	60	192	38	37	271	82	1231
04:15 PM	72	259	20	35	143	71	53	224	30	30	323	49	1309
04:30 PM	62	276	21	45	145	54	55	243	44	47	280	68	1340
04:45 PM	84	292	27	45	142	51	59	229	37	25	303	49	1343
Total	288	1038	86	154	578	251	227	888	149	139	1177	248	5223
05:00 PM	73	262	26	54	171	65	46	219	31	33	321	61	1362
05:15 PM	93	283	22	50	152	59	53	187	36	36	330	57	1358
05:30 PM	61	325	18	43	143	64	50	220	29	34	322	64	1373
05:45 PM	71	315	22	35	118	77	64	225	30	36	310	66	1369
Total	298	1185	88	182	584	265	213	851	126	139	1283	248	5462
Grand Total	959	3822	339	610	3247	1139	1001	3880	508	567	3443	817	20332
Apprch %	18.7	74.6	6.6	12.2	65	22.8	18.6	72	9.4	11.7	71.3	16.9	
Total %	4.7	18.8	1.7	3	16	5.6	4.9	19.1	2.5	2.8	16.9	4	

CITY TRAFFIC COUNTERS
626.991.7522
www.ctcounters.com

File Name : Segundo_Prairie_Thur
Site Code : 00000000
Start Date : 2/19/2015
Page No : 2

	Prairie Ave Southbound				El Segundo Blvd Westbound				Prairie Ave Northbound				El Segundo Blvd Eastbound				
Start Time	Left	Thru	Right	App. Total	Left	Thru	Right	App. Total	Left	Thru	Right	App. Total	Left	Thru	Right	App. Total	Int. Total
Peak Hour Analysis From 07:00 AM to 11:45 AM - Peak 1 of 1																	
Peak Hour for Entire Intersection Begins at 07:30 AM																	
07:30 AM	41	200	18	259	27	**330**	77	**434**	**79**	295	29	403	32	117	41	190	1286
07:45 AM	**58**	246	**27**	**331**	37	313	72	422	79	315	32	**426**	44	**171**	43	**258**	**1437**
08:00 AM	51	**257**	22	330	**60**	256	**83**	399	57	**320**	26	403	41	158	**45**	244	1376
08:15 AM	52	233	26	311	45	248	79	372	73	292	**39**	404	**48**	135	42	225	1312
Total Volume	202	936	93	1231	169	1147	311	1627	288	1222	126	1636	165	581	171	917	5411
% App. Total	16.4	76	7.6		10.4	70.5	19.1		17.6	74.7	7.7		18	63.4	18.6		
PHF	.871	.911	.861	.930	.704	.869	.937	.937	.911	.955	.808	.960	.859	.849	.950	.889	.941

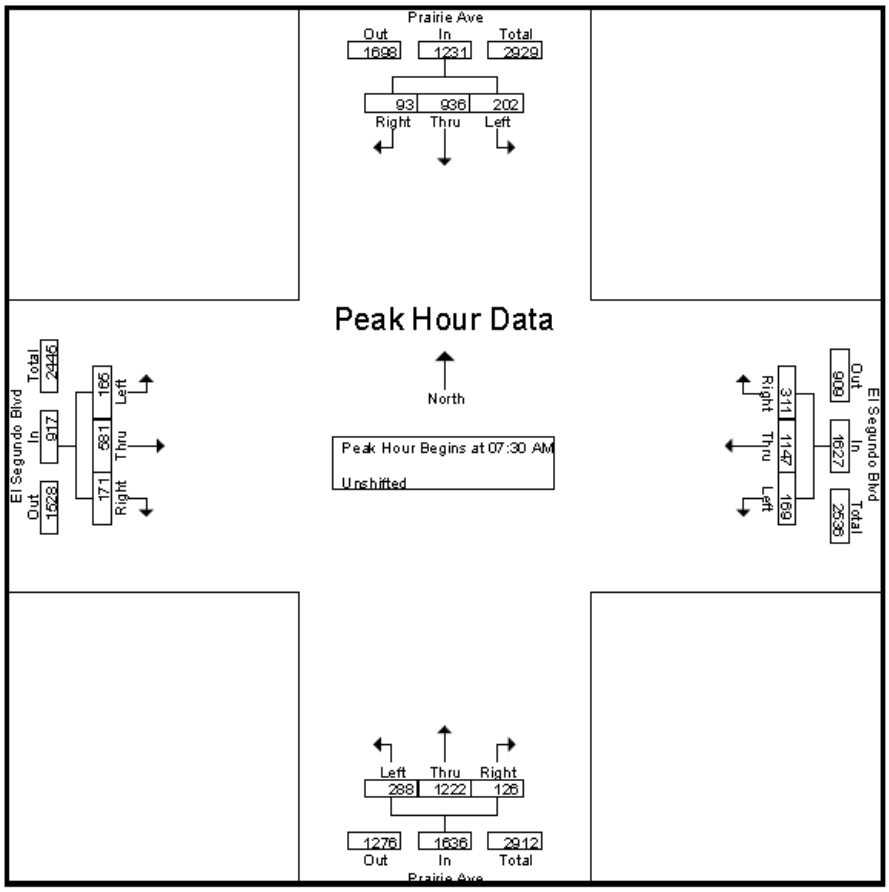

CITY TRAFFIC COUNTERS
626.991.7522
www.ctcounters.com

File Name : Segundo_Prairie_Thur
Site Code : 00000000
Start Date : 2/19/2015
Page No : 3

	Prairie Ave Southbound				El Segundo Blvd Westbound				Prairie Ave Northbound				El Segundo Blvd Eastbound				
Start Time	Left	Thru	Right	App. Total	Left	Thru	Right	App. Total	Left	Thru	Right	App. Total	Left	Thru	Right	App. Total	Int. Total
Peak Hour Analysis From 12:00 PM to 05:45 PM - Peak 1 of 1																	
Peak Hour for Entire Intersection Begins at 05:00 PM																	
05:00 PM	73	262	**26**	361	**54**	**171**	65	**290**	46	219	31	296	33	321	61	415	1362
05:15 PM	**93**	283	22	398	50	152	59	261	53	187	**36**	276	**36**	**330**	57	**423**	1358
05:30 PM	61	**325**	18	404	43	143	64	250	50	220	29	299	34	322	64	420	**1373**
05:45 PM	71	315	22	**408**	35	118	**77**	230	**64**	**225**	30	**319**	36	310	**66**	412	1369
Total Volume	298	1185	88	1571	182	584	265	1031	213	851	126	1190	139	1283	248	1670	5462
% App. Total	19	75.4	5.6		17.7	56.6	25.7		17.9	71.5	10.6		8.3	76.8	14.9		
PHF	.801	.912	.846	.963	.843	.854	.860	.889	.832	.946	.875	.933	.965	.972	.939	.987	.995

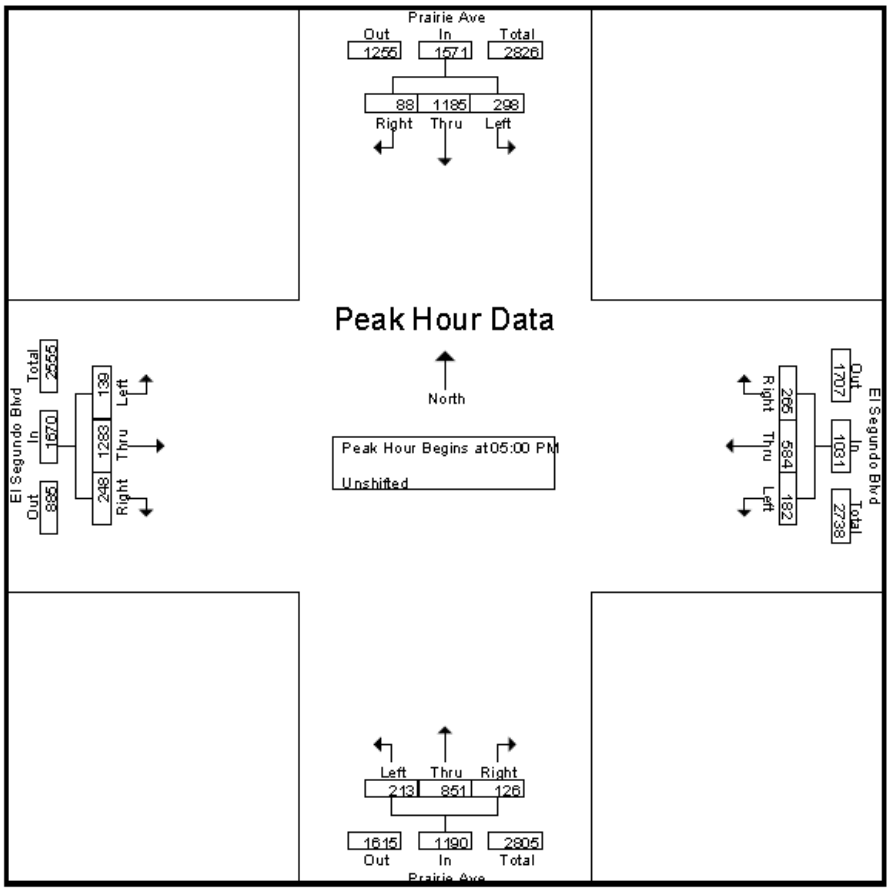

CITY TRAFFIC COUNTERS

626.991.7522

www.ctcounters.com

File Name : Segundo_Prairie
Site Code : 00000000
Start Date : 2/21/2015
Page No : 1

Groups Printed- Unshifted

	Prairie Ave Southbound			El Segundo Blvd Westbound			Prairie Ave Northbound			El Segundo Blvd Eastbound			
Start Time	Left	Thru	Right	Left	Thru	Right	Left	Thru	Right	Left	Thru	Right	Int. Total
11:00 AM	41	168	34	24	123	47	56	182	37	36	103	37	888
11:15 AM	52	151	18	37	127	46	40	141	40	37	112	42	843
11:30 AM	37	177	22	27	121	44	45	177	26	42	113	57	888
11:45 AM	42	197	24	33	136	49	66	203	23	38	116	57	984
Total	172	693	98	121	507	186	207	703	126	153	444	193	3603
12:00 PM	37	196	35	32	128	65	45	155	30	37	141	40	941
12:15 PM	44	156	34	33	120	57	38	182	28	34	140	35	901
12:30 PM	36	163	38	25	127	51	49	185	37	47	144	48	950
12:45 PM	52	171	26	32	147	55	48	190	31	29	111	57	949
Total	169	686	133	122	522	228	180	712	126	147	536	180	3741
Grand Total	341	1379	231	243	1029	414	387	1415	252	300	980	373	7344
Apprch %	17.5	70.7	11.8	14.4	61	24.6	18.8	68.9	12.3	18.1	59.3	22.6	
Total %	4.6	18.8	3.1	3.3	14	5.6	5.3	19.3	3.4	4.1	13.3	5.1	

CITY TRAFFIC COUNTERS

626.991.7522

www.ctcounters.com

File Name : Segundo_Prairie
Site Code : 00000000
Start Date : 2/21/2015
Page No : 2

	Prairie Ave Southbound				El Segundo Blvd Westbound				Prairie Ave Northbound				El Segundo Blvd Eastbound				
Start Time	Left	Thru	Right	App. Total	Left	Thru	Right	App. Total	Left	Thru	Right	App. Total	Left	Thru	Right	App. Total	Int. Total
Peak Hour Analysis From 11:00 AM to 12:45 PM - Peak 1 of 1																	
Peak Hour for Entire Intersection Begins at 11:45 AM																	
11:45 AM	42	**197**	24	263	**33**	**136**	49	218	**66**	**203**	23	**292**	38	116	**57**	211	**984**
12:00 PM	37	196	35	**268**	32	128	**65**	**225**	45	155	30	230	37	141	40	218	941
12:15 PM	**44**	156	34	234	33	120	57	210	38	182	28	248	34	140	35	209	901
12:30 PM	36	163	**38**	237	25	127	51	203	49	185	**37**	271	**47**	**144**	48	**239**	950
Total Volume	159	712	131	1002	123	511	222	856	198	725	118	1041	156	541	180	877	3776
% App. Total	15.9	71.1	13.1		14.4	59.7	25.9		19	69.6	11.3		17.8	61.7	20.5		
PHF	.903	.904	.862	.935	.932	.939	.854	.951	.750	.893	.797	.891	.830	.939	.789	.917	.959

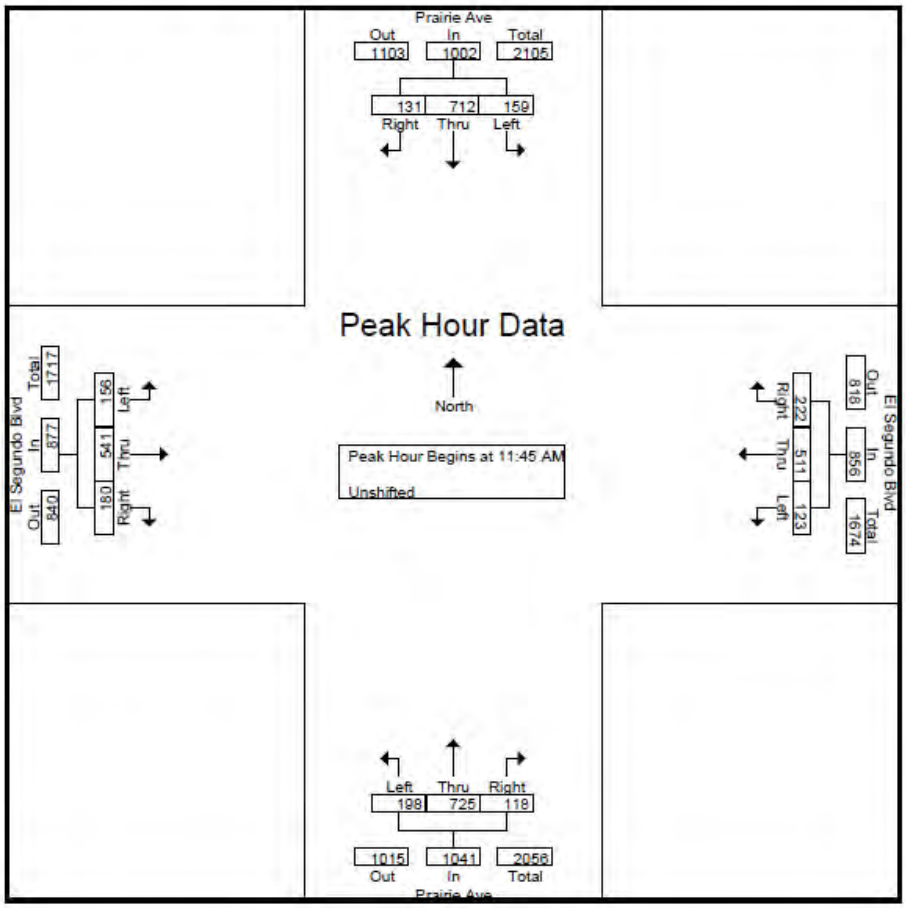

PRAIRIE AVENUE AND IMPERIAL HIGHWAY

CITY TRAFFIC COUNTERS

626.991.7522

www.ctcounters.com

File Name : Imperial_Prairie_wed
Site Code : 00000000
Start Date : 2/18/2015
Page No : 1

Groups Printed- Unshifted

	Prairie Ave Southbound			Imperial Hwy Westbound			Prairie Ave Northbound			Imperial Hwy Eastbound			
Start Time	Left	Thru	Right	Left	Thru	Right	Left	Thru	Right	Left	Thru	Right	Int. Total
07:00 AM	15	132	178	27	337	38	111	112	19	23	50	5	1047
07:15 AM	33	140	261	52	458	18	95	158	24	15	53	12	1319
07:30 AM	38	195	237	62	420	22	108	167	29	26	72	13	1389
07:45 AM	66	216	272	80	362	36	103	146	35	21	96	20	1453
Total	152	683	948	221	1577	114	417	583	107	85	271	50	5208
08:00 AM	64	209	216	95	323	31	96	150	44	31	92	16	1367
08:15 AM	56	188	191	63	415	42	86	134	37	35	105	17	1369
08:30 AM	59	144	158	63	327	36	85	154	23	10	60	12	1131
08:45 AM	32	175	160	72	361	50	89	162	31	15	53	14	1214
Total	211	716	725	293	1426	159	356	600	135	91	310	59	5081
04:00 PM	93	212	107	76	201	28	66	163	44	34	249	31	1304
04:15 PM	96	218	143	51	164	20	56	151	48	33	323	49	1352
04:30 PM	95	250	114	70	168	32	52	127	45	34	216	37	1240
04:45 PM	86	292	154	70	165	54	45	125	40	55	306	37	1429
Total	370	972	518	267	698	134	219	566	177	156	1094	154	5325
05:00 PM	97	256	129	65	182	41	33	126	42	51	288	48	1358
05:15 PM	108	259	143	60	173	50	57	159	54	54	301	44	1462
05:30 PM	78	272	147	72	148	41	45	140	60	37	259	45	1344
05:45 PM	80	272	121	57	182	44	73	147	63	38	267	52	1396
Total	363	1059	540	254	685	176	208	572	219	180	1115	189	5560
Grand Total	1096	3430	2731	1035	4386	583	1200	2321	638	512	2790	452	21174
Apprch %	15.1	47.3	37.6	17.2	73.1	9.7	28.9	55.8	15.3	13.6	74.3	12	
Total %	5.2	16.2	12.9	4.9	20.7	2.8	5.7	11	3	2.4	13.2	2.1	

CITY TRAFFIC COUNTERS
626.991.7522
www.ctcounters.com

File Name : Imperial_Prairie_wed
Site Code : 00000000
Start Date : 2/18/2015
Page No : 2

	Prairie Ave Southbound				Imperial Hwy Westbound				Prairie Ave Northbound				Imperial Hwy Eastbound				
Start Time	Left	Thru	Right	App. Total	Left	Thru	Right	App. Total	Left	Thru	Right	App. Total	Left	Thru	Right	App. Total	Int. Total
Peak Hour Analysis From 07:00 AM to 11:45 AM - Peak 1 of 1																	
Peak Hour for Entire Intersection Begins at 07:30 AM																	
07:30 AM	38	195	237	470	62	**420**	22	504	**108**	**167**	29	**304**	26	72	13	111	1389
07:45 AM	**66**	**216**	**272**	**554**	80	362	36	478	103	146	35	284	21	96	**20**	137	**1453**
08:00 AM	64	209	216	489	**95**	323	31	449	96	150	**44**	290	31	92	16	139	1367
08:15 AM	56	188	191	435	63	415	**42**	**520**	86	134	37	257	**35**	**105**	17	**157**	1369
Total Volume	224	808	916	1948	300	1520	131	1951	393	597	145	1135	113	365	66	544	5578
% App. Total	11.5	41.5	47		15.4	77.9	6.7		34.6	52.6	12.8		20.8	67.1	12.1		
PHF	.848	.935	.842	.879	.789	.905	.780	.938	.910	.894	.824	.933	.807	.869	.825	.866	.960

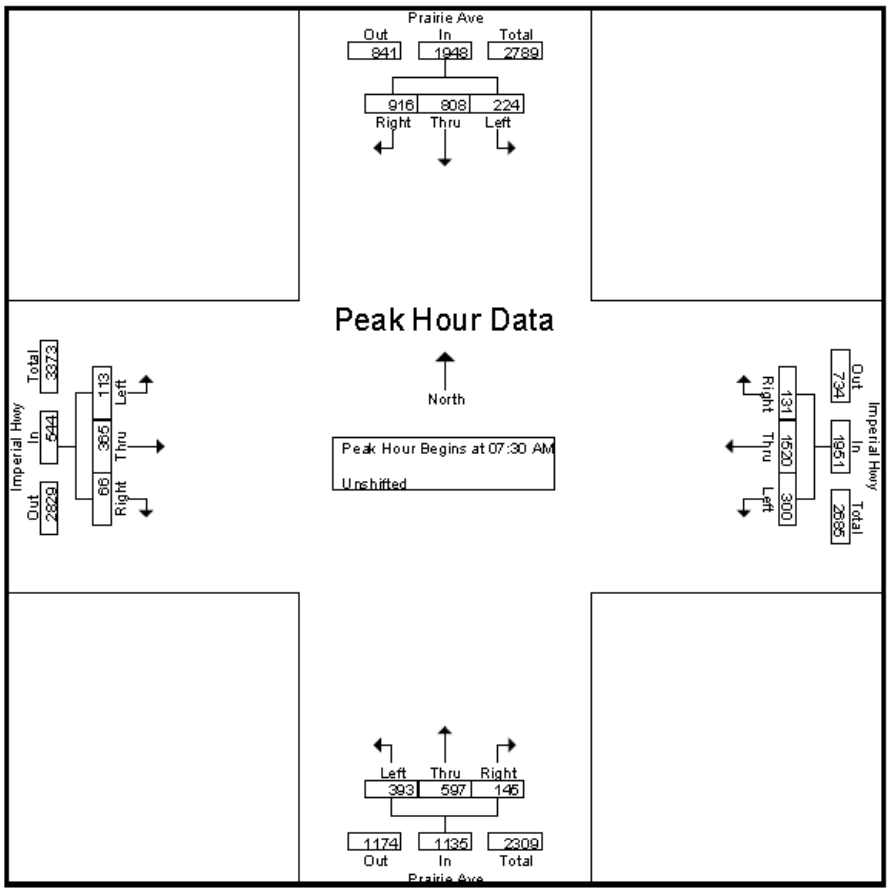

CITY TRAFFIC COUNTERS

626.991.7522

www.ctcounters.com

File Name : Imperial_Prairie_wed
Site Code : 00000000
Start Date : 2/18/2015
Page No : 3

	Prairie Ave Southbound				Imperial Hwy Westbound				Prairie Ave Northbound				Imperial Hwy Eastbound				
Start Time	Left	Thru	Right	App. Total	Left	Thru	Right	App. Total	Left	Thru	Right	App. Total	Left	Thru	Right	App. Total	Int. Total
Peak Hour Analysis From 12:00 PM to 05:45 PM - Peak 1 of 1																	
Peak Hour for Entire Intersection Begins at 04:45 PM																	
04:45 PM	86	**292**	**154**	**532**	70	165	**54**	**289**	45	125	40	210	**55**	**306**	37	398	1429
05:00 PM	97	256	129	482	65	**182**	41	288	33	126	42	201	51	288	**48**	387	1358
05:15 PM	**108**	259	143	510	60	173	50	283	**57**	**159**	54	**270**	54	301	44	**399**	**1462**
05:30 PM	78	272	147	497	**72**	148	41	261	45	140	**60**	245	37	259	45	341	1344
Total Volume	369	1079	573	2021	267	668	186	1121	180	550	196	926	197	1154	174	1525	5593
% App. Total	18.3	53.4	28.4		23.8	59.6	16.6		19.4	59.4	21.2		12.9	75.7	11.4		
PHF	.854	.924	.930	.950	.927	.918	.861	.970	.789	.865	.817	.857	.895	.943	.906	.956	.956

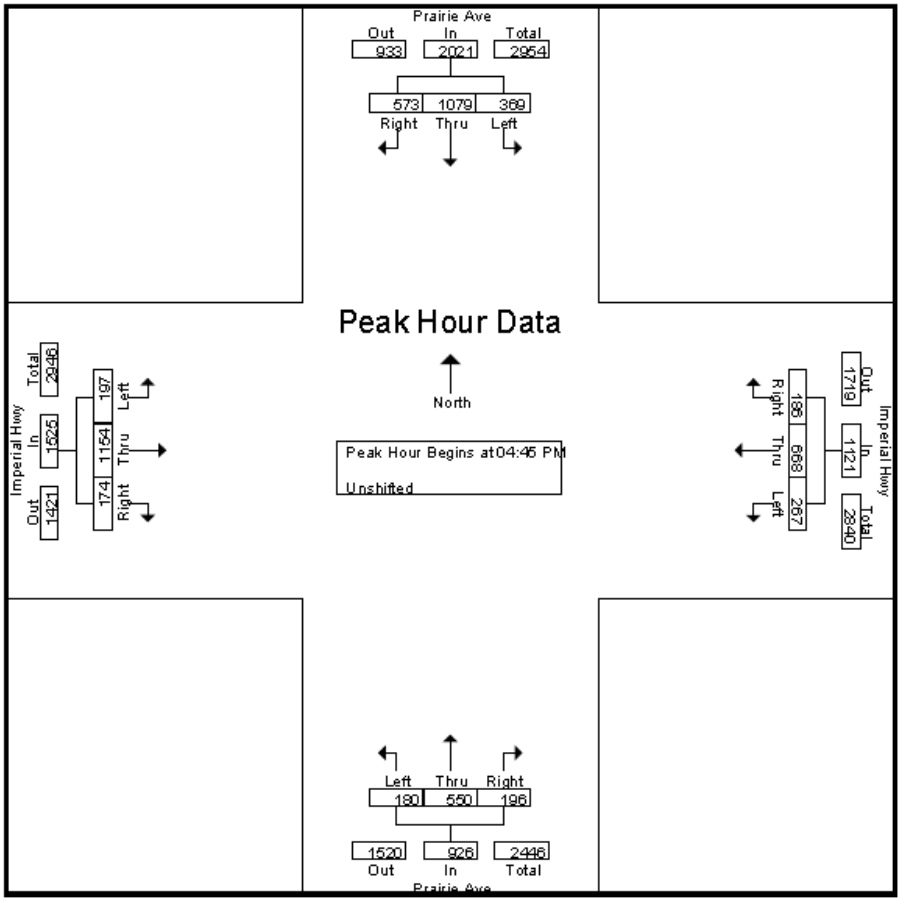

CITY TRAFFIC COUNTERS

626.991.7522

www.ctcounters.com

File Name : imperial_prairie
Site Code : 00000000
Start Date : 2/14/2015
Page No : 1

Groups Printed- Unshifted

	Prairie Ave Southbound			Imperial Hwy Westbound			Prairie Ave Northbound			Imperial Hwy Eastbound			
Start Time	Left	Thru	Right	Left	Thru	Right	Left	Thru	Right	Left	Thru	Right	Int. Total
11:00 AM	50	196	130	31	158	15	66	115	42	21	100	13	937
11:15 AM	52	216	179	60	166	39	57	119	49	35	97	16	1085
11:30 AM	41	170	145	71	184	39	91	129	35	34	89	15	1043
11:45 AM	66	201	159	39	149	46	80	156	37	48	94	9	1084
Total	209	783	613	201	657	139	294	519	163	138	380	53	4149
12:00 PM	44	184	186	47	178	39	83	145	37	37	111	23	1114
12:15 PM	65	195	198	68	168	59	59	151	34	38	102	15	1152
12:30 PM	38	223	202	63	179	43	59	144	47	41	109	20	1168
12:45 PM	54	153	173	54	219	51	77	155	49	35	104	14	1138
Total	201	755	759	232	744	192	278	595	167	151	426	72	4572
Grand Total	410	1538	1372	433	1401	331	572	1114	330	289	806	125	8721
Apprch %	12.3	46.3	41.3	20	64.7	15.3	28.4	55.3	16.4	23.7	66.1	10.2	
Total %	4.7	17.6	15.7	5	16.1	3.8	6.6	12.8	3.8	3.3	9.2	1.4	

CITY TRAFFIC COUNTERS

626.991.7522

www.ctcounters.com

File Name : imperial_prairie
Site Code : 00000000
Start Date : 2/14/2015
Page No : 2

	Prairie Ave Southbound				Imperial Hwy Westbound				Prairie Ave Northbound				Imperial Hwy Eastbound				
Start Time	Left	Thru	Right	App. Total	Left	Thru	Right	App. Total	Left	Thru	Right	App. Total	Left	Thru	Right	App. Total	Int. Total
Peak Hour Analysis From 11:00 AM to 12:45 PM - Peak 1 of 1																	
Peak Hour for Entire Intersection Begins at 12:00 PM																	
12:00 PM	44	184	186	414	47	178	39	264	**83**	145	37	265	37	**111**	**23**	**171**	1114
12:15 PM	**65**	195	198	458	**68**	168	**59**	295	59	151	34	244	38	102	15	155	1152
12:30 PM	38	**223**	**202**	**463**	63	179	43	285	59	144	47	250	**41**	109	20	170	**1168**
12:45 PM	54	153	173	380	54	**219**	51	**324**	77	**155**	**49**	**281**	35	104	14	153	1138
Total Volume	201	755	759	1715	232	744	192	1168	278	595	167	1040	151	426	72	649	4572
% App. Total	11.7	44	44.3		19.9	63.7	16.4		26.7	57.2	16.1		23.3	65.6	11.1		
PHF	.773	.846	.939	.926	.853	.849	.814	.901	.837	.960	.852	.925	.921	.959	.783	.949	.979

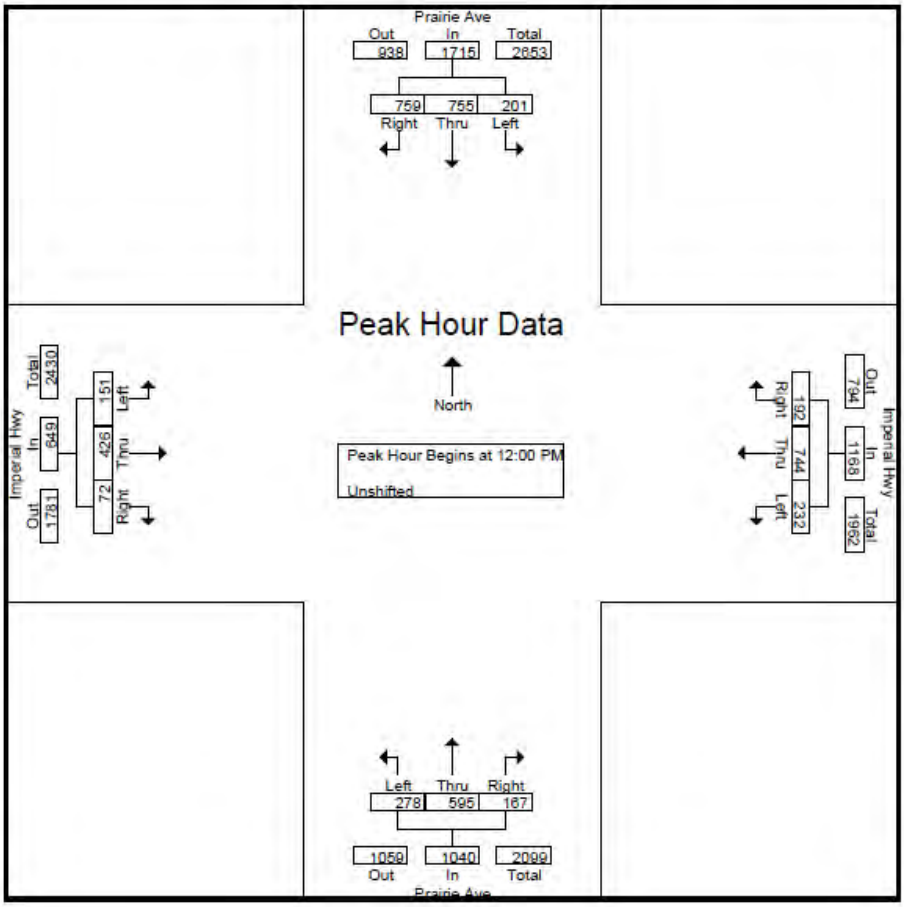

PRAIRIE AVENUE AND I-105 EB/WB OFF-RAMP

CITY TRAFFIC COUNTERS

www.ctcounters.com

File Name : Prairie_105FrwyEBOff-Ramp
Site Code : 00000000
Start Date : 6/11/2015
Page No : 1

Groups Printed- Unshifted

	Prairie Ave Southbound			Westbound			Prairie Ave Northbound			I-105 Frwy EB Off-Ramp Eastbound			
Start Time	Left	Thru	Right	Left	Thru	Right	Left	Thru	Right	Left	Thru	Right	Int. Total
07:00 AM	0	225	0	0	0	0	0	155	2	65	0	45	492
07:15 AM	4	286	0	0	0	0	0	189	3	60	3	66	611
07:30 AM	4	382	0	0	0	0	0	201	1	78	4	66	736
07:45 AM	8	392	0	0	0	0	0	226	8	86	8	72	800
Total	16	1285	0	0	0	0	0	771	14	289	15	249	2639
08:00 AM	9	376	0	0	0	0	0	219	4	70	12	67	757
08:15 AM	4	276	0	0	0	0	0	227	2	55	5	65	634
08:30 AM	5	238	0	0	0	0	0	237	0	74	5	66	625
08:45 AM	0	259	0	0	0	0	0	180	2	69	8	78	596
Total	18	1149	0	0	0	0	0	863	8	268	30	276	2612
04:00 PM	6	284	0	0	0	0	0	179	5	143	26	98	741
04:15 PM	6	337	0	0	0	0	0	195	7	135	11	111	802
04:30 PM	3	280	0	0	0	0	0	208	8	146	11	102	758
04:45 PM	5	345	0	0	0	0	0	226	10	130	24	101	841
Total	20	1246	0	0	0	0	0	808	30	554	72	412	3142
05:00 PM	8	354	0	0	0	0	0	229	3	164	20	108	886
05:15 PM	11	358	0	0	0	0	0	182	12	161	15	120	859
05:30 PM	10	326	0	0	0	0	0	204	7	132	20	97	796
05:45 PM	5	358	0	0	0	0	0	201	9	134	22	104	833
Total	34	1396	0	0	0	0	0	816	31	591	77	429	3374
Grand Total	88	5076	0	0	0	0	0	3258	83	1702	194	1366	11767
Apprch %	1.7	98.3	0	0	0	0	0	97.5	2.5	52.2	5.9	41.9	
Total %	0.7	43.1	0	0	0	0	0	27.7	0.7	14.5	1.6	11.6	

CITY TRAFFIC COUNTERS

www.ctcounters.com

File Name : Prairie_105FrwyEBOff-Ramp
Site Code : 00000000
Start Date : 6/11/2015
Page No : 2

	Prairie Ave Southbound				Westbound				Prairie Ave Northbound				I-105 Frwy EB Off-Ramp Eastbound				
Start Time	Left	Thru	Right	App. Total	Left	Thru	Right	App. Total	Left	Thru	Right	App. Total	Left	Thru	Right	App. Total	Int. Total
Peak Hour Analysis From 07:00 AM to 11:45 AM - Peak 1 of 1																	
Peak Hour for Entire Intersection Begins at 07:30 AM																	
07:30 AM	4	382	0	386	0	0	0	0	0	201	1	202	78	4	66	148	736
07:45 AM	8	**392**	0	**400**	0	0	0	0	0	226	**8**	**234**	**86**	8	**72**	**166**	**800**
08:00 AM	**9**	376	0	385	0	0	0	0	0	219	4	223	70	**12**	67	149	757
08:15 AM	4	276	0	280	0	0	0	0	0	**227**	2	229	55	5	65	125	634
Total Volume	25	1426	0	1451	0	0	0	0	0	873	15	888	289	29	270	588	2927
% App. Total	1.7	98.3	0		0	0	0		0	98.3	1.7		49.1	4.9	45.9		
PHF	.694	.909	.000	.907	.000	.000	.000	.000	.000	.961	.469	.949	.840	.604	.938	.886	.915

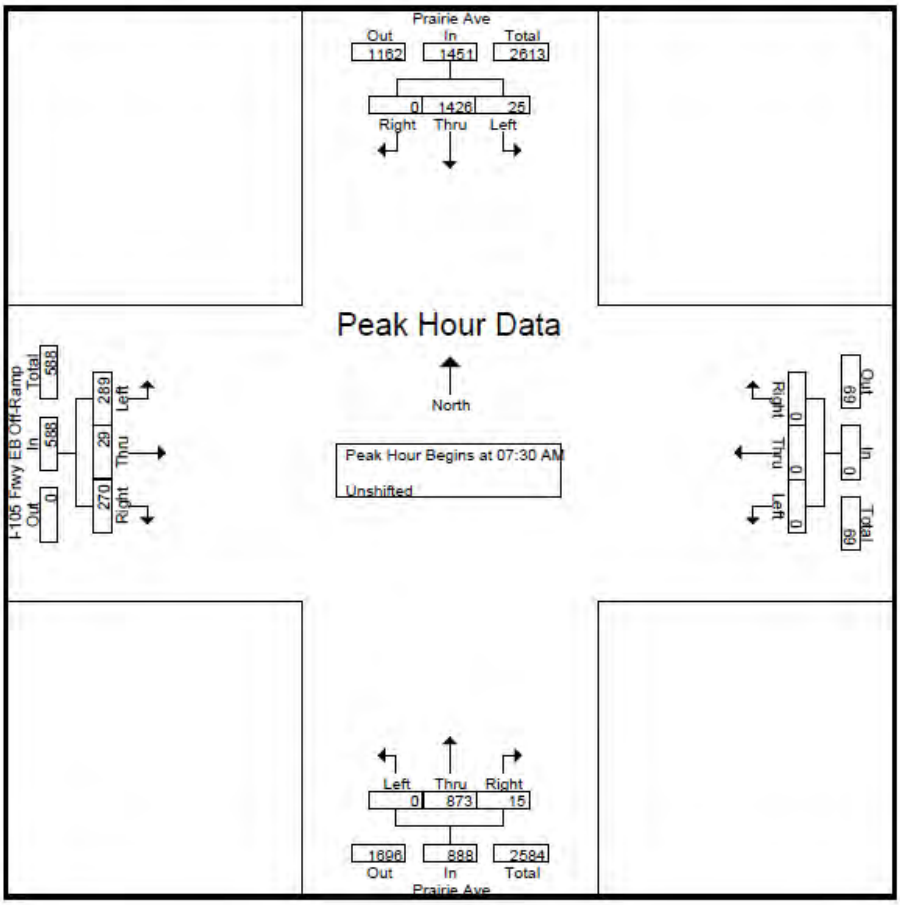

CITY TRAFFIC COUNTERS

www.ctcounters.com

File Name : Prairie_105FrwyEBOff-Ramp
Site Code : 00000000
Start Date : 6/11/2015
Page No : 3

	Prairie Ave Southbound				Westbound				Prairie Ave Northbound				I-105 Frwy EB Off-Ramp Eastbound				
Start Time	Left	Thru	Right	App. Total	Left	Thru	Right	App. Total	Left	Thru	Right	App. Total	Left	Thru	Right	App. Total	Int. Total
Peak Hour Analysis From 12:00 PM to 05:45 PM - Peak 1 of 1																	
Peak Hour for Entire Intersection Begins at 04:45 PM																	
04:45 PM	5	345	0	350	0	0	0	0	0	226	10	**236**	130	**24**	101	255	841
05:00 PM	8	354	0	362	0	0	0	0	0	**229**	3	232	**164**	20	108	292	**886**
05:15 PM	**11**	**358**	0	**369**	0	0	0	0	0	182	**12**	194	161	15	**120**	**296**	859
05:30 PM	10	326	0	336	0	0	0	0	0	204	7	211	132	20	97	249	796
Total Volume	34	1383	0	1417	0	0	0	0	0	841	32	873	587	79	426	1092	3382
% App. Total	2.4	97.6	0		0	0	0		0	96.3	3.7		53.8	7.2	39		
PHF	.773	.966	.000	.960	.000	.000	.000	.000	.000	.918	.667	.925	.895	.823	.888	.922	.954

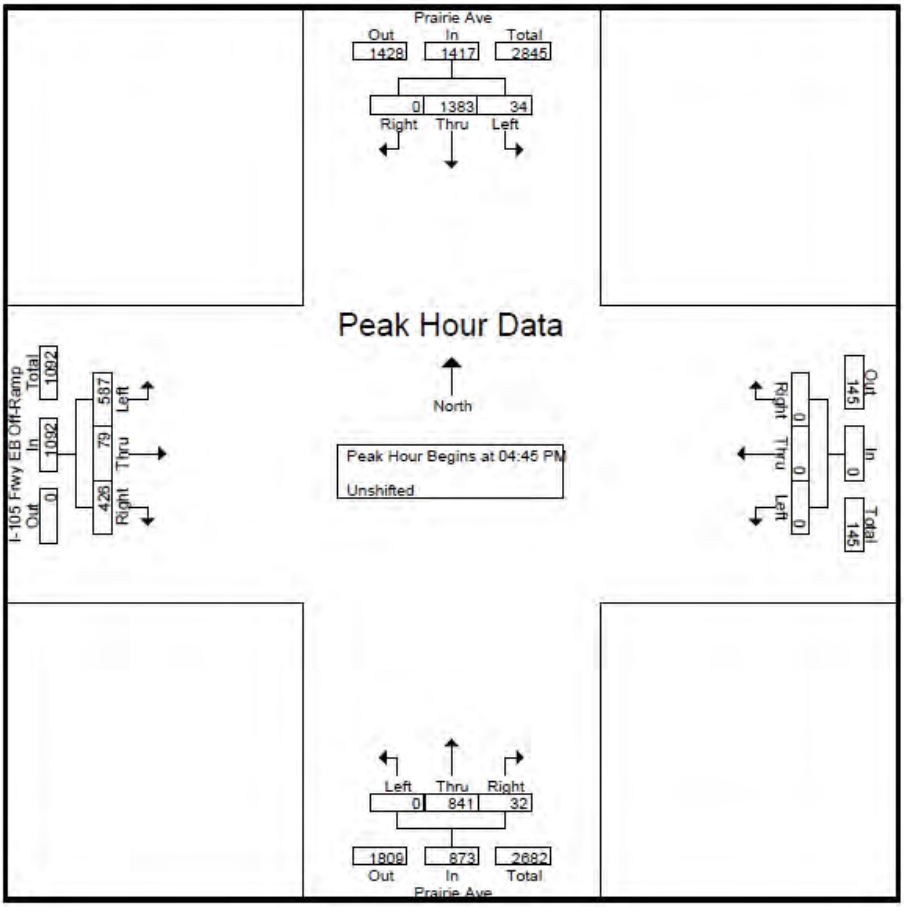

IMPERIAL HIGHWAY AND I-105 EB ON-RAMP

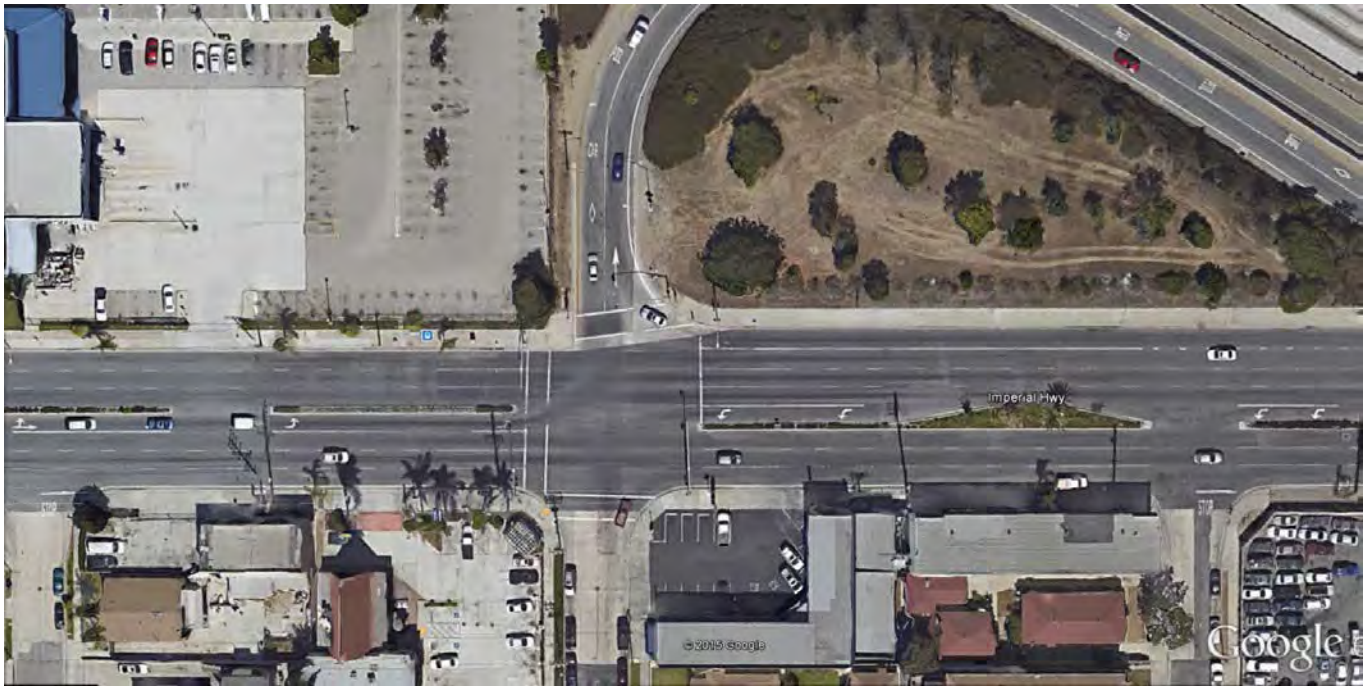

CITY TRAFFIC COUNTERS

www.ctcounters.com

File Name : I-105FrwyEBOn-Ramp_ImperialHwy
Site Code : 00000000
Start Date : 6/11/2015
Page No : 1

Groups Printed- Unshifted

	I-105 Frwy EB On-Ramp Southbound			Imperial Hwy Westbound			Freeman Ave Northbound			Imperial Hwy Eastbound			
Start Time	Left	Thru	Right	Left	Thru	Right	Left	Thru	Right	Left	Thru	Right	Int. Total
07:00 AM	0	0	0	2	230	76	11	21	4	67	67	1	479
07:15 AM	0	0	0	3	236	103	11	17	2	76	71	3	522
07:30 AM	0	0	0	3	286	113	12	27	8	78	80	2	609
07:45 AM	0	0	0	5	354	91	12	15	7	65	126	3	678
Total	0	0	0	13	1106	383	46	80	21	286	344	9	2288
08:00 AM	0	0	0	8	281	90	11	17	2	66	116	3	594
08:15 AM	0	0	0	5	272	77	8	15	5	70	118	6	576
08:30 AM	0	0	0	4	236	85	8	13	5	86	99	3	539
08:45 AM	0	0	0	2	225	92	7	10	1	69	72	2	480
Total	0	0	0	19	1014	344	34	55	13	291	405	14	2189
04:00 PM	0	0	0	11	138	87	6	35	10	138	334	5	764
04:15 PM	0	0	0	6	118	67	9	49	11	160	343	3	766
04:30 PM	0	0	0	7	138	69	2	43	11	147	344	4	765
04:45 PM	0	0	0	15	129	69	5	40	6	162	356	10	792
Total	0	0	0	39	523	292	22	167	38	607	1377	22	3087
05:00 PM	0	0	0	6	142	86	5	45	16	143	405	13	861
05:15 PM	0	0	0	8	158	60	10	47	13	138	332	10	776
05:30 PM	0	0	0	11	129	72	5	57	14	187	375	4	854
05:45 PM	0	0	0	11	134	68	1	40	10	110	387	7	768
Total	0	0	0	36	563	286	21	189	53	578	1499	34	3259
Grand Total	0	0	0	107	3206	1305	123	491	125	1762	3625	79	10823
Apprch %	0	0	0	2.3	69.4	28.3	16.6	66.4	16.9	32.2	66.3	1.4	
Total %	0	0	0	1	29.6	12.1	1.1	4.5	1.2	16.3	33.5	0.7	

CITY TRAFFIC COUNTERS

www.ctcounters.com

File Name : I-105FrwyEBOn-Ramp_ImperialHwy
Site Code : 00000000
Start Date : 6/11/2015
Page No : 2

	I-105 Frwy EB On-Ramp Southbound				Imperial Hwy Westbound				Freeman Ave Northbound				Imperial Hwy Eastbound				
Start Time	Left	Thru	Right	App. Total	Left	Thru	Right	App. Total	Left	Thru	Right	App. Total	Left	Thru	Right	App. Total	Int. Total
Peak Hour Analysis From 07:00 AM to 11:45 AM - Peak 1 of 1																	
Peak Hour for Entire Intersection Begins at 07:30 AM																	
07:30 AM	0	0	0	0	3	286	**113**	402	**12**	**27**	**8**	**47**	78	80	2	160	609
07:45 AM	0	0	0	0	5	**354**	91	**450**	12	15	7	34	65	**126**	3	**194**	**678**
08:00 AM	0	0	0	0	**8**	281	90	379	11	17	2	30	66	116	3	185	594
08:15 AM	0	0	0	0	5	272	77	354	8	15	5	28	70	118	**6**	194	576
Total Volume	0	0	0	0	21	1193	371	1585	43	74	22	139	279	440	14	733	2457
% App. Total	0	0	0		1.3	75.3	23.4		30.9	53.2	15.8		38.1	60	1.9		
PHF	.000	.000	.000	.000	.656	.843	.821	.881	.896	.685	.688	.739	.894	.873	.583	.945	.906

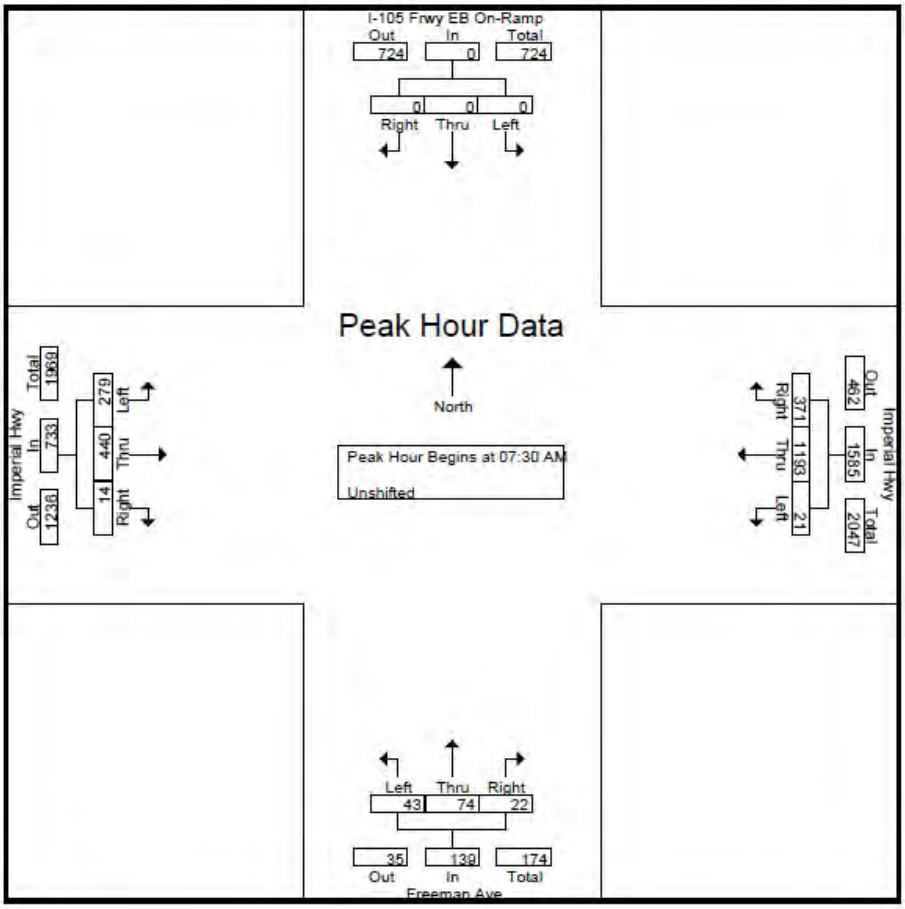

CITY TRAFFIC COUNTERS

www.ctcounters.com

File Name : I-105FrwyEBOn-Ramp_ImperialHwy
Site Code : 00000000
Start Date : 6/11/2015
Page No : 3

	I-105 Frwy EB On-Ramp Southbound				Imperial Hwy Westbound				Freeman Ave Northbound				Imperial Hwy Eastbound				
Start Time	Left	Thru	Right	App. Total	Left	Thru	Right	App. Total	Left	Thru	Right	App. Total	Left	Thru	Right	App. Total	Int. Total
Peak Hour Analysis From 12:00 PM to 05:45 PM - Peak 1 of 1																	
Peak Hour for Entire Intersection Begins at 04:45 PM																	
04:45 PM	0	0	0	0	**15**	129	69	213	5	40	6	51	162	356	10	528	792
05:00 PM	0	0	0	0	6	142	**86**	**234**	5	45	**16**	66	143	**405**	**13**	561	**861**
05:15 PM	0	0	0	0	8	**158**	60	226	**10**	47	13	70	138	332	10	480	776
05:30 PM	0	0	0	0	11	129	72	212	5	**57**	14	**76**	**187**	375	4	**566**	854
Total Volume	0	0	0	0	40	558	287	885	25	189	49	263	630	1468	37	2135	3283
% App. Total	0	0	0		4.5	63.1	32.4		9.5	71.9	18.6		29.5	68.8	1.7		
PHF	.000	.000	.000	.000	.667	.883	.834	.946	.625	.829	.766	.865	.842	.906	.712	.943	.953

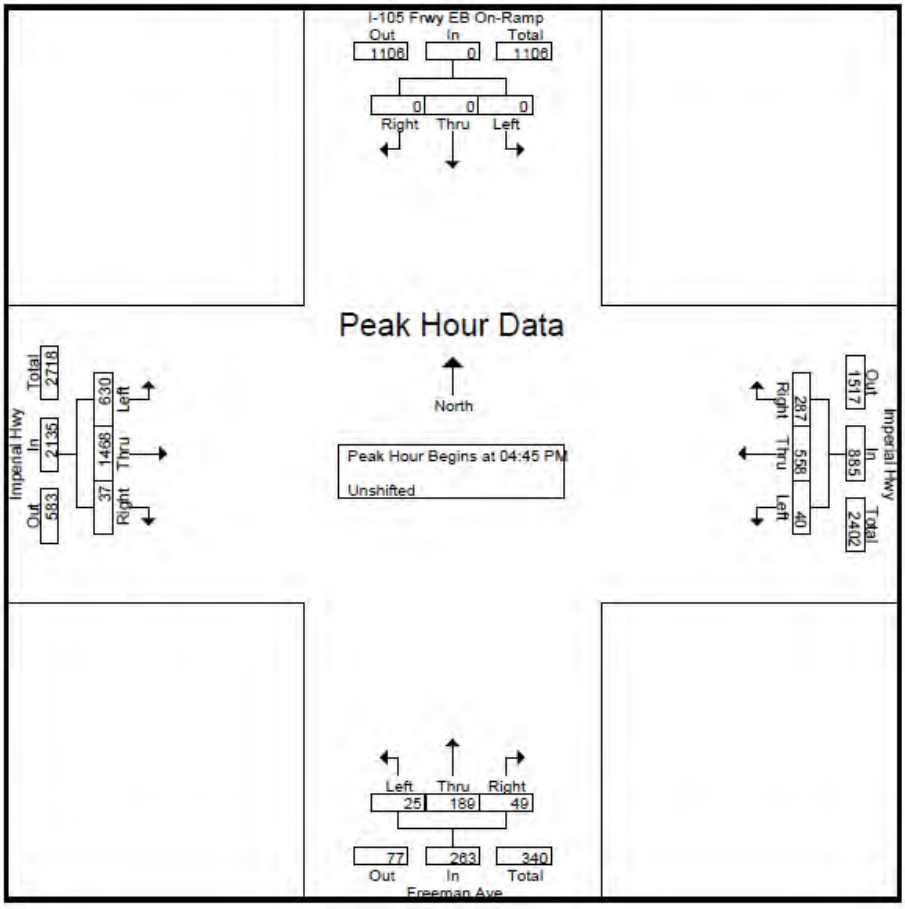

HAWTHORNE BOULEVARD AND I-105 WB OFF-RAMP

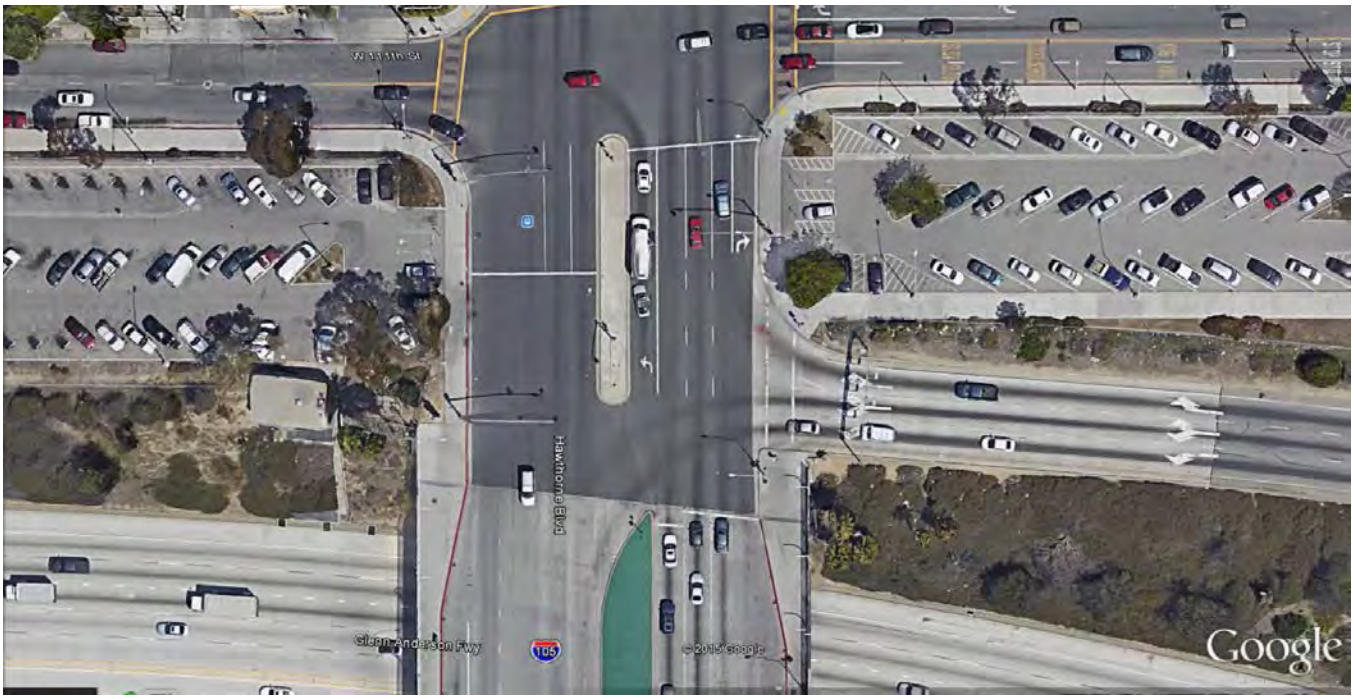

CITY TRAFFIC COUNTERS

www.ctcounters.com

File Name : Hawthorne_I-105FrwyWBOff-Ramp
Site Code : 00000000
Start Date : 6/11/2015
Page No : 1

Groups Printed- Unshifted

	Hawthorne Blvd Southbound			I-105 Frwy WB Off-Ramp Westbound			Hawthorne Blvd Northbound			Eastbound			
Start Time	Left	Thru	Right	Left	Thru	Right	Left	Thru	Right	Left	Thru	Right	Int. Total
07:00 AM	0	200	0	35	0	59	0	138	0	0	0	0	432
07:15 AM	0	247	0	36	0	71	0	142	0	0	0	0	496
07:30 AM	0	302	0	48	0	83	0	185	0	0	0	0	618
07:45 AM	0	369	0	57	0	124	0	224	0	0	0	0	774
Total	0	1118	0	176	0	337	0	689	0	0	0	0	2320
08:00 AM	0	386	0	57	0	97	0	249	0	0	0	0	789
08:15 AM	0	358	0	69	0	71	0	212	0	0	0	0	710
08:30 AM	0	259	0	41	0	74	0	232	0	0	0	0	606
08:45 AM	0	232	0	55	0	76	0	180	0	0	0	0	543
Total	0	1235	0	222	0	318	0	873	0	0	0	0	2648
04:00 PM	0	358	0	102	0	97	0	222	0	0	0	0	779
04:15 PM	0	327	0	86	0	88	0	240	0	0	0	0	741
04:30 PM	0	375	0	101	0	91	0	244	0	0	0	0	811
04:45 PM	0	408	0	112	0	123	0	222	0	0	0	0	865
Total	0	1468	0	401	0	399	0	928	0	0	0	0	3196
05:00 PM	0	422	0	78	0	116	0	256	0	0	0	0	872
05:15 PM	0	399	0	95	0	116	0	221	0	0	0	0	831
05:30 PM	0	420	0	100	0	120	0	289	0	0	0	0	929
05:45 PM	0	374	0	118	0	102	0	229	0	0	0	0	823
Total	0	1615	0	391	0	454	0	995	0	0	0	0	3455
Grand Total	0	5436	0	1190	0	1508	0	3485	0	0	0	0	11619
Apprch %	0	100	0	44.1	0	55.9	0	100	0	0	0	0	
Total %	0	46.8	0	10.2	0	13	0	30	0	0	0	0	

CITY TRAFFIC COUNTERS

www.ctcounters.com

File Name : Hawthorne_I-105FrwyWBOff-Ramp
Site Code : 00000000
Start Date : 6/11/2015
Page No : 2

	Hawthorne Blvd Southbound				I-105 Frwy WB Off-Ramp Westbound				Hawthorne Blvd Northbound				Eastbound				
Start Time	Left	Thru	Right	App. Total	Left	Thru	Right	App. Total	Left	Thru	Right	App. Total	Left	Thru	Right	App. Total	Int. Total
Peak Hour Analysis From 07:00 AM to 11:45 AM - Peak 1 of 1																	
Peak Hour for Entire Intersection Begins at 07:30 AM																	
07:30 AM	0	302	0	302	48	0	83	131	0	185	0	185	0	0	0	0	618
07:45 AM	0	369	0	369	57	0	**124**	**181**	0	224	0	224	0	0	0	0	774
08:00 AM	0	**386**	0	**386**	57	0	97	154	0	**249**	0	**249**	0	0	0	0	**789**
08:15 AM	0	358	0	358	**69**	0	71	140	0	212	0	212	0	0	0	0	710
Total Volume	0	1415	0	1415	231	0	375	606	0	870	0	870	0	0	0	0	2891
% App. Total	0	100	0		38.1	0	61.9		0	100	0		0	0	0		
PHF	.000	.916	.000	.916	.837	.000	.756	.837	.000	.873	.000	.873	.000	.000	.000	.000	.916

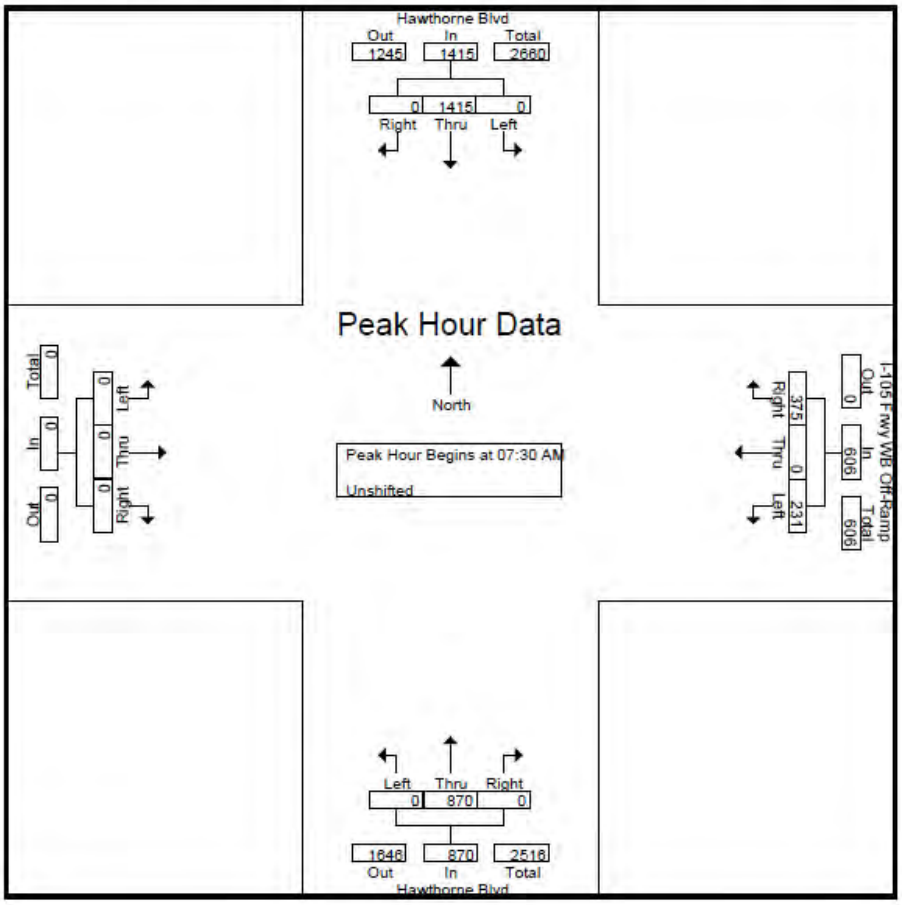

CITY TRAFFIC COUNTERS

www.ctcounters.com

File Name : Hawthorne_I-105FrwyWBOff-Ramp
Site Code : 00000000
Start Date : 6/11/2015
Page No : 3

	Hawthorne Blvd Southbound				I-105 Frwy WB Off-Ramp Westbound				Hawthorne Blvd Northbound				Eastbound				
Start Time	Left	Thru	Right	App. Total	Left	Thru	Right	App. Total	Left	Thru	Right	App. Total	Left	Thru	Right	App. Total	Int. Total
Peak Hour Analysis From 12:00 PM to 05:45 PM - Peak 1 of 1																	
Peak Hour for Entire Intersection Begins at 04:45 PM																	
04:45 PM	0	408	0	408	**112**	0	**123**	**235**	0	222	0	222	0	0	0	0	865
05:00 PM	0	**422**	0	**422**	78	0	116	194	0	256	0	256	0	0	0	0	872
05:15 PM	0	399	0	399	95	0	116	211	0	221	0	221	0	0	0	0	831
05:30 PM	0	420	0	420	100	0	120	220	0	**289**	0	**289**	0	0	0	0	**929**
Total Volume	0	1649	0	1649	385	0	475	860	0	988	0	988	0	0	0	0	3497
% App. Total	0	100	0		44.8	0	55.2		0	100	0		0	0	0		
PHF	.000	.977	.000	.977	.859	.000	.965	.915	.000	.855	.000	.855	.000	.000	.000	.000	.941

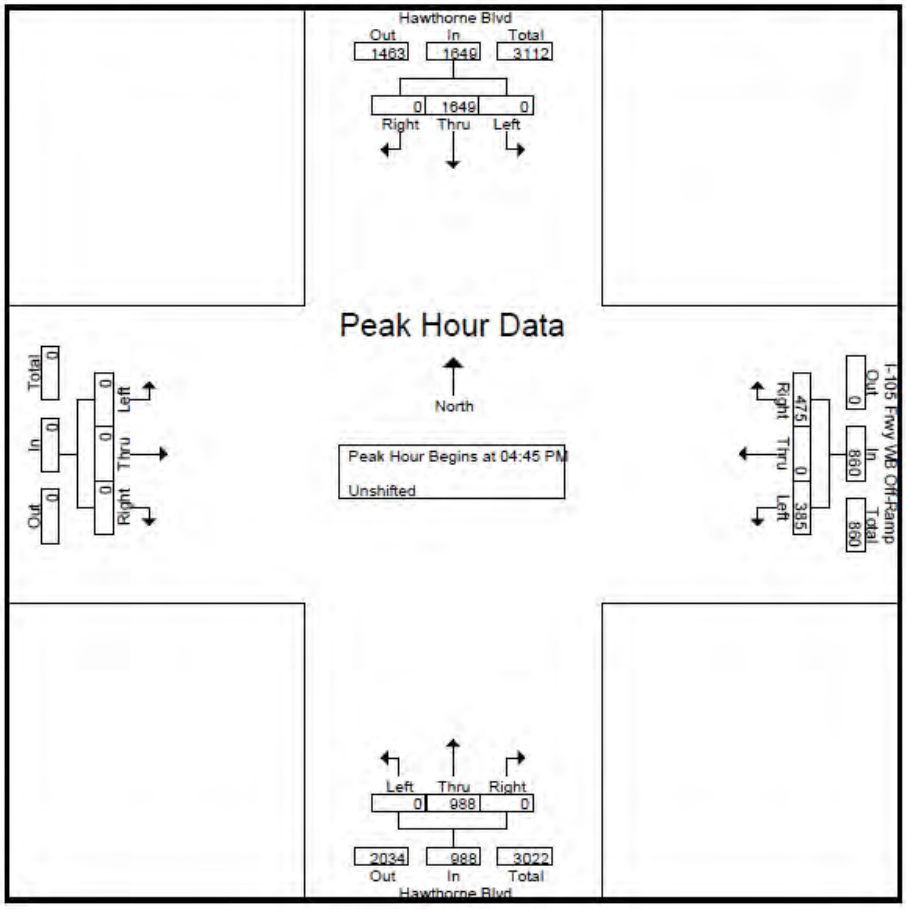

EL SEGUNDO BOULEVARD AND I-405 NB ON/OFF-RAMP

CITY TRAFFIC COUNTERS

www.ctcounters.com

File Name : I-405FrwyNBOn-OffRamps_ElSegundo
Site Code : 00000000
Start Date : 6/11/2015
Page No : 1

Groups Printed- Unshifted

	Southbound			El Segundo Blvd Westbound			I-405 Frwy NB On-Off Ramps Northbound			El Segundo Blvd Eastbound			
Start Time	Left	Thru	Right	Left	Thru	Right	Left	Thru	Right	Left	Thru	Right	Int. Total
07:00 AM	0	0	0	0	250	163	158	0	4	0	82	79	736
07:15 AM	0	0	0	0	213	144	208	0	10	0	97	75	747
07:30 AM	0	0	0	0	225	143	203	0	9	0	135	63	778
07:45 AM	0	0	0	0	214	129	158	0	16	0	178	81	776
Total	0	0	0	0	902	579	727	0	39	0	492	298	3037
08:00 AM	0	0	0	0	200	140	178	0	14	0	180	81	793
08:15 AM	0	0	0	0	253	146	172	0	8	0	142	81	802
08:30 AM	0	0	0	0	199	132	172	0	6	0	155	93	757
08:45 AM	0	0	0	0	214	105	166	0	10	0	130	73	698
Total	0	0	0	0	866	523	688	0	38	0	607	328	3050
04:00 PM	0	0	0	0	109	70	84	0	46	0	453	96	858
04:15 PM	0	0	0	0	100	88	104	0	37	0	504	91	924
04:30 PM	0	0	0	0	144	79	105	0	47	0	518	105	998
04:45 PM	0	0	0	0	116	69	93	0	38	0	544	73	933
Total	0	0	0	0	469	306	386	0	168	0	2019	365	3713
05:00 PM	0	0	0	0	122	77	88	0	45	0	514	96	942
05:15 PM	0	0	0	0	115	70	94	0	58	0	541	102	980
05:30 PM	0	0	0	0	110	72	77	0	48	0	539	98	944
05:45 PM	0	0	0	0	131	79	70	0	45	0	527	95	947
Total	0	0	0	0	478	298	329	0	196	0	2121	391	3813
Grand Total	0	0	0	0	2715	1706	2130	0	441	0	5239	1382	13613
Apprch %	0	0	0	0	61.4	38.6	82.8	0	17.2	0	79.1	20.9	
Total %	0	0	0	0	19.9	12.5	15.6	0	3.2	0	38.5	10.2	

CITY TRAFFIC COUNTERS

www.ctcounters.com

File Name : I-405FrwyNBOn-OffRamps_ElSegundo
Site Code : 00000000
Start Date : 6/11/2015
Page No : 2

	Southbound				El Segundo Blvd Westbound				I-405 Frwy NB On-Off Ramps Northbound				El Segundo Blvd Eastbound				
Start Time	Left	Thru	Right	App. Total	Left	Thru	Right	App. Total	Left	Thru	Right	App. Total	Left	Thru	Right	App. Total	Int. Total
Peak Hour Analysis From 07:00 AM to 11:45 AM - Peak 1 of 1																	
Peak Hour for Entire Intersection Begins at 07:30 AM																	
07:30 AM	0	0	0	0	0	225	143	368	**203**	0	9	**212**	0	135	63	198	778
07:45 AM	0	0	0	0	0	214	129	343	158	0	**16**	174	0	178	**81**	259	776
08:00 AM	0	0	0	0	0	200	140	340	178	0	14	192	0	**180**	81	**261**	793
08:15 AM	0	0	0	0	0	**253**	**146**	**399**	172	0	8	180	0	142	81	223	**802**
Total Volume	0	0	0	0	0	892	558	1450	711	0	47	758	0	635	306	941	3149
% App. Total	0	0	0		0	61.5	38.5		93.8	0	6.2		0	67.5	32.5		
PHF	.000	.000	.000	.000	.000	.881	.955	.909	.876	.000	.734	.894	.000	.882	.944	.901	.982

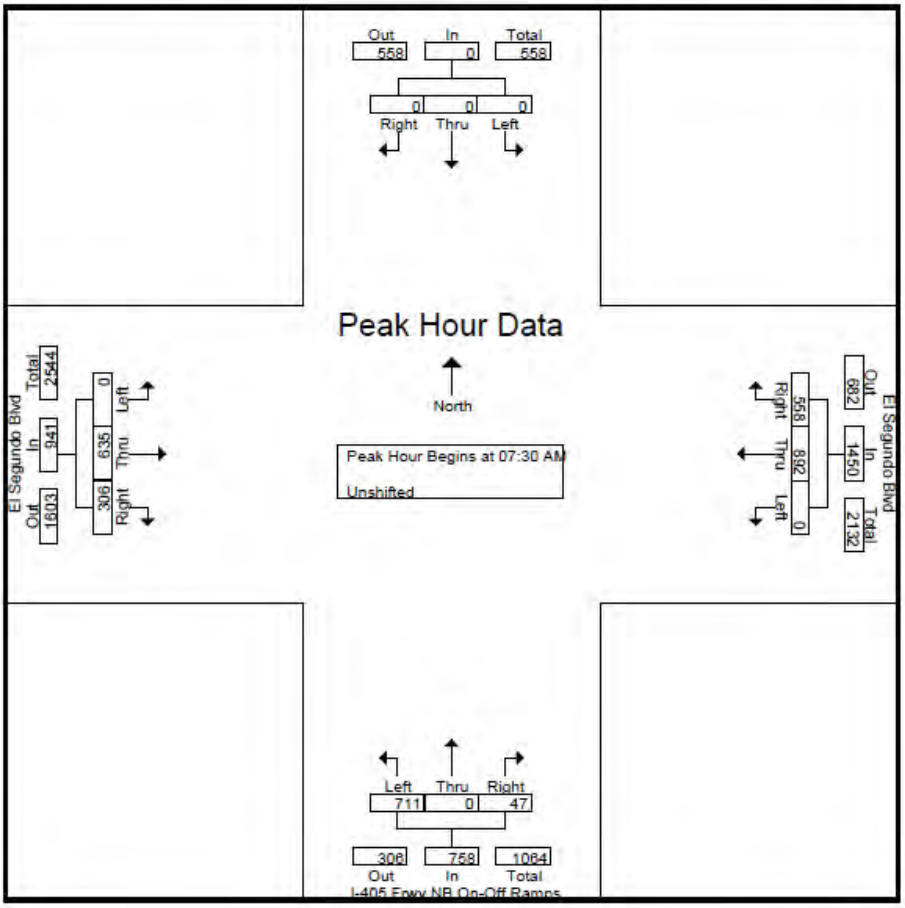

CITY TRAFFIC COUNTERS

www.ctcounters.com

File Name : I-405FrwyNBOn-OffRamps_ElSegundo
Site Code : 00000000
Start Date : 6/11/2015
Page No : 3

	Southbound				El Segundo Blvd Westbound				I-405 Frwy NB On-Off Ramps Northbound				El Segundo Blvd Eastbound				
Start Time	Left	Thru	Right	App. Total	Left	Thru	Right	App. Total	Left	Thru	Right	App. Total	Left	Thru	Right	App. Total	Int. Total
Peak Hour Analysis From 12:00 PM to 05:45 PM - Peak 1 of 1																	
Peak Hour for Entire Intersection Begins at 04:30 PM																	
04:30 PM	0	0	0	0	0	**144**	**79**	**223**	**105**	0	47	**152**	0	518	**105**	623	**998**
04:45 PM	0	0	0	0	0	116	69	185	93	0	38	131	0	**544**	73	617	933
05:00 PM	0	0	0	0	0	122	77	199	88	0	45	133	0	514	96	610	942
05:15 PM	0	0	0	0	0	115	70	185	94	0	**58**	152	0	541	102	**643**	980
Total Volume	0	0	0	0	0	497	295	792	380	0	188	568	0	2117	376	2493	3853
% App. Total	0	0	0		0	62.8	37.2		66.9	0	33.1		0	84.9	15.1		
PHF	.000	.000	.000	.000	.000	.863	.934	.888	.905	.000	.810	.934	.000	.973	.895	.969	.965

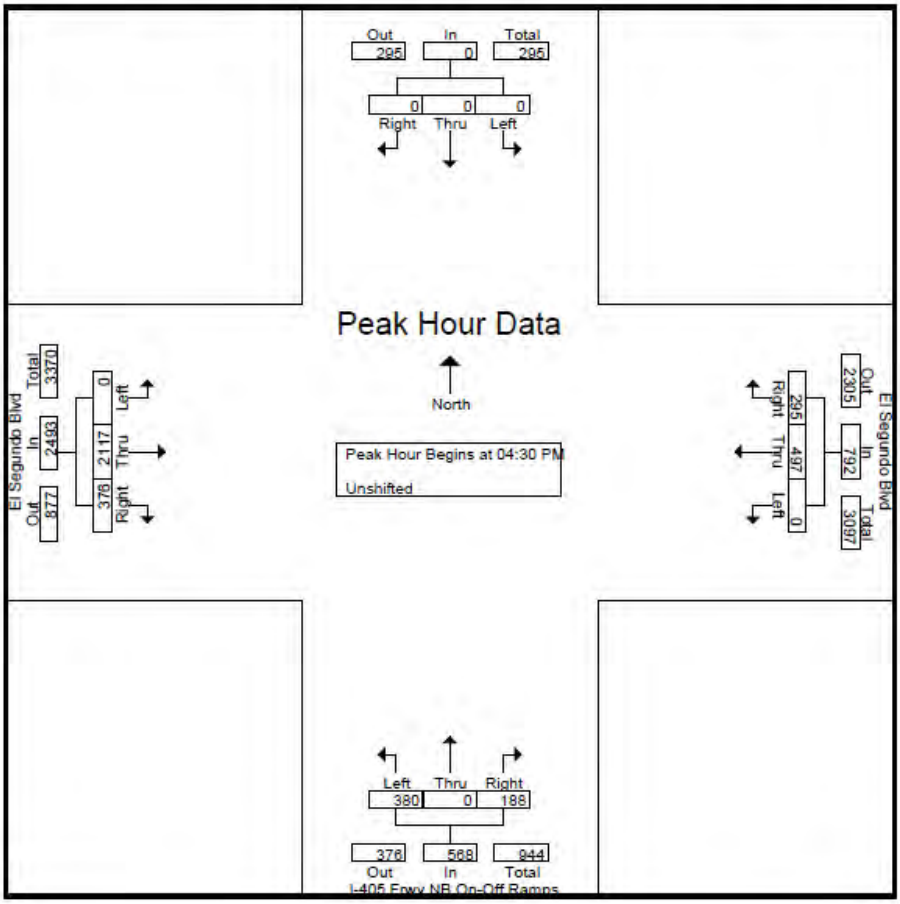

EL SEGUNDO BOULEVARD AND I-405 SB ON/OFF-RAMP

CITY TRAFFIC COUNTERS

www.ctcounters.com

File Name : I-405FrwySBOn-OffRamps_ElSegundo
Site Code : 00000000
Start Date : 6/11/2015
Page No : 1

Groups Printed- Unshifted

	Southbound			El Segundo Blvd Westbound			I-405 Frwy SB On-Off Ramps Northbound			El Segundo Blvd Eastbound			
Start Time	Left	Thru	Right	Left	Thru	Right	Left	Thru	Right	Left	Thru	Right	Int. Total
07:00 AM	0	0	0	0	358	0	58	0	10	0	89	33	548
07:15 AM	0	0	0	0	421	0	69	0	15	0	106	68	679
07:30 AM	0	0	0	0	394	0	85	0	33	0	133	59	704
07:45 AM	0	0	0	0	360	0	76	0	36	0	128	57	657
Total	0	0	0	0	1533	0	288	0	94	0	456	217	2588
08:00 AM	0	0	0	0	281	0	95	0	32	0	137	60	605
08:15 AM	0	0	0	0	359	0	67	0	23	0	133	49	631
08:30 AM	0	0	0	0	331	0	71	0	24	0	152	42	620
08:45 AM	0	0	0	0	351	0	69	0	19	0	140	59	638
Total	0	0	0	0	1322	0	302	0	98	0	562	210	2494
04:00 PM	0	0	0	0	232	0	63	0	70	0	313	171	849
04:15 PM	0	0	0	0	249	0	61	0	92	0	346	200	948
04:30 PM	0	0	0	0	284	0	62	0	90	0	348	164	948
04:45 PM	0	0	0	0	240	0	50	0	89	0	349	192	920
Total	0	0	0	0	1005	0	236	0	341	0	1356	727	3665
05:00 PM	0	0	0	0	237	0	77	0	93	0	364	222	993
05:15 PM	0	0	0	0	252	0	78	0	85	0	428	238	1081
05:30 PM	0	0	0	0	214	0	55	0	91	0	390	196	946
05:45 PM	0	0	0	0	243	0	69	0	67	0	383	225	987
Total	0	0	0	0	946	0	279	0	336	0	1565	881	4007
Grand Total	0	0	0	0	4806	0	1105	0	869	0	3939	2035	12754
Apprch %	0	0	0	0	100	0	56	0	44	0	65.9	34.1	
Total %	0	0	0	0	37.7	0	8.7	0	6.8	0	30.9	16	

CITY TRAFFIC COUNTERS

www.ctcounters.com

File Name : I-405FrwySBOn-OffRamps_ElSegundo
Site Code : 00000000
Start Date : 6/11/2015
Page No : 2

	Southbound				El Segundo Blvd Westbound				I-405 Frwy SB On-Off Ramps Northbound				El Segundo Blvd Eastbound				
Start Time	Left	Thru	Right	App. Total	Left	Thru	Right	App. Total	Left	Thru	Right	App. Total	Left	Thru	Right	App. Total	Int. Total
Peak Hour Analysis From 07:00 AM to 11:45 AM - Peak 1 of 1																	
Peak Hour for Entire Intersection Begins at 07:15 AM																	
07:15 AM	0	0	0	0	0	**421**	0	**421**	69	0	15	84	0	106	**68**	174	679
07:30 AM	0	0	0	0	0	394	0	394	85	0	33	118	0	133	59	192	**704**
07:45 AM	0	0	0	0	0	360	0	360	76	0	**36**	112	0	128	57	185	657
08:00 AM	0	0	0	0	0	281	0	281	**95**	0	32	**127**	0	**137**	60	**197**	605
Total Volume	0	0	0	0	0	1456	0	1456	325	0	116	441	0	504	244	748	2645
% App. Total	0	0	0		0	100	0		73.7	0	26.3		0	67.4	32.6		
PHF	.000	.000	.000	.000	.000	.865	.000	.865	.855	.000	.806	.868	.000	.920	.897	.949	.939

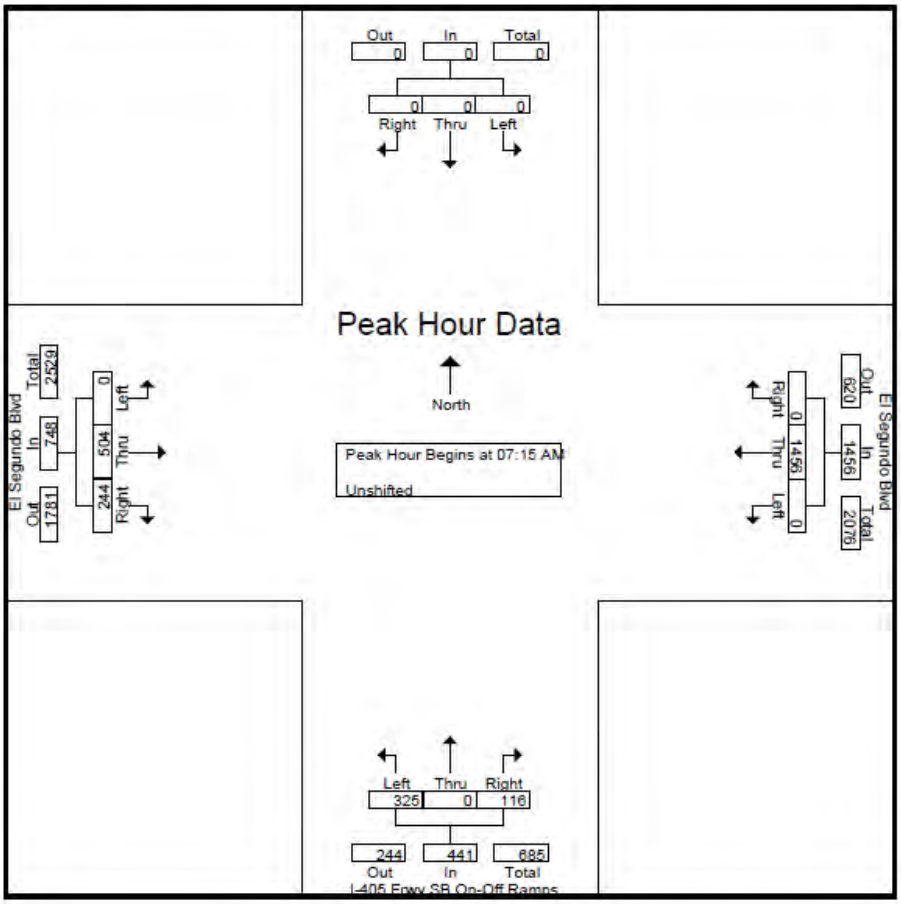

CITY TRAFFIC COUNTERS

www.ctcounters.com

File Name : I-405FrwySBOn-OffRamps_ElSegundo
Site Code : 00000000
Start Date : 6/11/2015
Page No : 3

	Southbound				El Segundo Blvd Westbound				I-405 Frwy SB On-Off Ramps Northbound				El Segundo Blvd Eastbound				
Start Time	Left	Thru	Right	App. Total	Left	Thru	Right	App. Total	Left	Thru	Right	App. Total	Left	Thru	Right	App. Total	Int. Total
Peak Hour Analysis From 12:00 PM to 05:45 PM - Peak 1 of 1																	
Peak Hour for Entire Intersection Begins at 05:00 PM																	
05:00 PM	0	0	0	0	0	237	0	237	77	0	93	170	0	364	222	586	993
05:15 PM	0	0	0	0	0	**252**	0	**252**	**78**	0	85	163	0	**428**	**238**	**666**	**1081**
05:30 PM	0	0	0	0	0	214	0	214	55	0	91	146	0	390	196	586	946
05:45 PM	0	0	0	0	0	243	0	243	69	0	67	136	0	383	225	608	987
Total Volume	0	0	0	0	0	946	0	946	279	0	336	615	0	1565	881	2446	4007
% App. Total	0	0	0		0	100	0		45.4	0	54.6		0	64	36		
PHF	.000	.000	.000	.000	.000	.938	.000	.938	.894	.000	.903	.904	.000	.914	.925	.918	.927

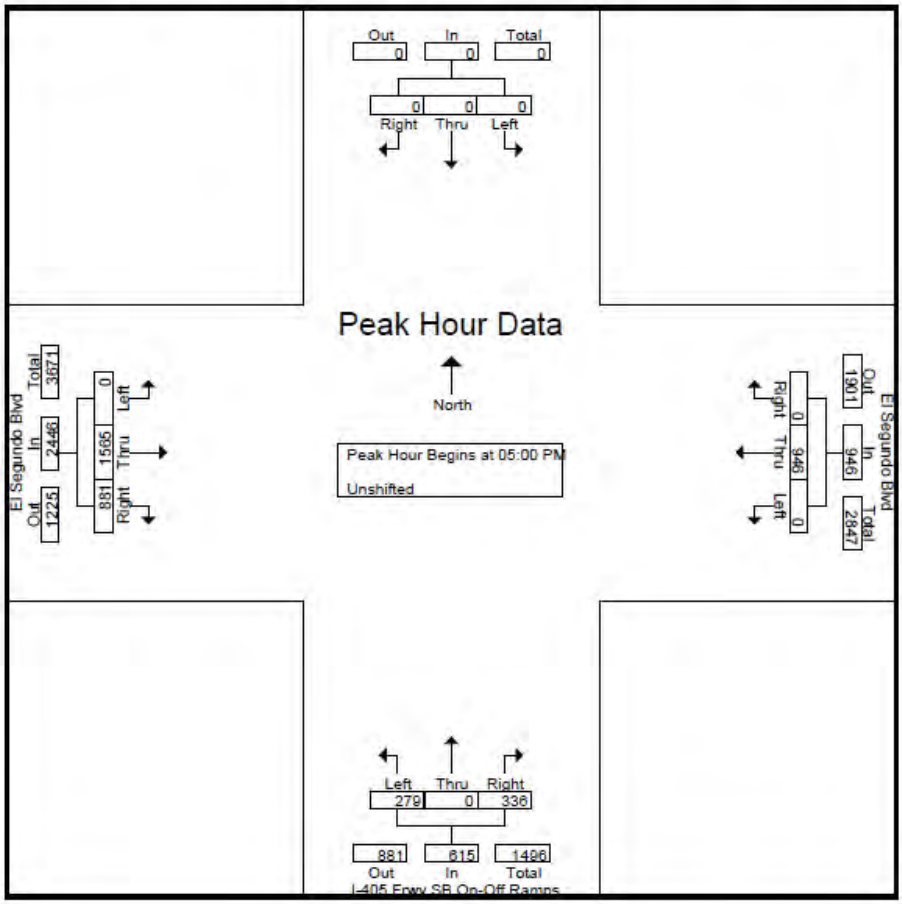

BIRCH AVENUE AND EL SEGUNDO BOULEVARD

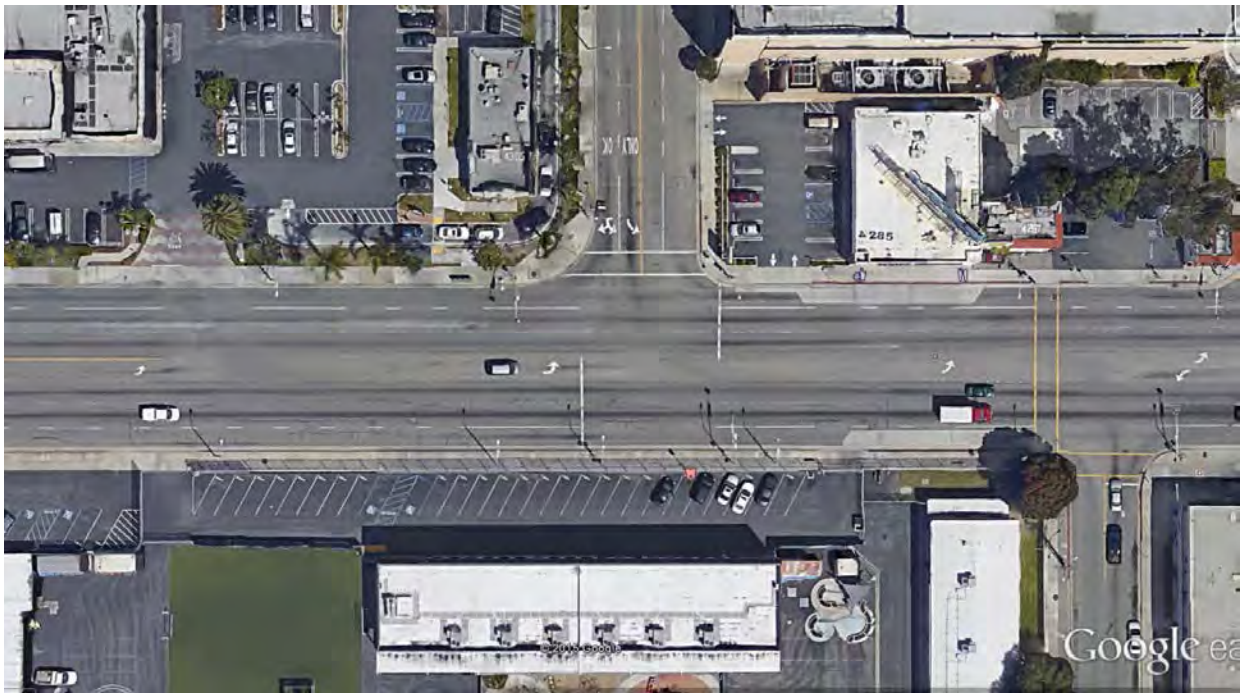

CITY TRAFFIC COUNTERS
WWW.CTCOUNTERS.COM

File Name : Birch_ElSegundo
Site Code : 00000000
Start Date : 9/16/2015
Page No : 1

Groups Printed- Unshifted

	Birch Ave Southbound			El Segundo Blvd Westbound			Northbound			El Segundo Blvd Eastbound			
Start Time	Left	Thru	Right	Left	Thru	Right	Left	Thru	Right	Left	Thru	Right	Int. Total
07:00 AM	11	0	14	0	320	27	0	0	0	7	102	0	481
07:15 AM	14	0	15	0	323	34	0	0	0	9	112	0	507
07:30 AM	23	0	29	0	408	40	0	0	0	8	142	0	650
07:45 AM	27	0	18	0	362	36	0	0	0	16	263	0	722
Total	75	0	76	0	1413	137	0	0	0	40	619	0	2360
08:00 AM	56	0	21	0	215	21	0	0	0	14	240	0	567
08:15 AM	40	0	29	0	282	44	0	0	0	7	190	0	592
08:30 AM	23	0	14	0	283	37	0	0	0	15	170	0	542
08:45 AM	20	0	12	0	251	26	0	0	0	16	157	0	482
Total	139	0	76	0	1031	128	0	0	0	52	757	0	2183
04:00 PM	53	0	27	0	169	11	0	0	0	20	375	0	655
04:15 PM	37	0	14	0	222	15	0	0	0	19	382	0	689
04:30 PM	39	0	13	0	210	8	0	0	0	14	417	0	701
04:45 PM	52	0	30	0	232	13	0	0	0	14	387	0	728
Total	181	0	84	0	833	47	0	0	0	67	1561	0	2773
05:00 PM	49	0	29	0	250	18	0	0	0	15	414	0	775
05:15 PM	44	0	25	0	219	25	0	0	0	21	350	0	684
05:30 PM	50	0	36	0	217	20	0	0	0	10	424	0	757
05:45 PM	48	0	33	0	179	10	0	0	0	20	392	0	682
Total	191	0	123	0	865	73	0	0	0	66	1580	0	2898
Grand Total	586	0	359	0	4142	385	0	0	0	225	4517	0	10214
Apprch %	62	0	38	0	91.5	8.5	0	0	0	4.7	95.3	0	
Total %	5.7	0	3.5	0	40.6	3.8	0	0	0	2.2	44.2	0	

CITY TRAFFIC COUNTERS
WWW.CTCOUNTERS.COM

File Name : Birch_ElSegundo
Site Code : 00000000
Start Date : 9/16/2015
Page No : 2

	Birch Ave Southbound				El Segundo Blvd Westbound				Northbound				El Segundo Blvd Eastbound				
Start Time	Left	Thru	Right	App. Total	Left	Thru	Right	App. Total	Left	Thru	Right	App. Total	Left	Thru	Right	App. Total	Int. Total
Peak Hour Analysis From 07:00 AM to 11:45 AM - Peak 1 of 1																	
Peak Hour for Entire Intersection Begins at 07:30 AM																	
07:30 AM	23	0	**29**	52	0	**408**	40	**448**	0	0	0	0	8	142	0	150	650
07:45 AM	27	0	18	45	0	362	36	398	0	0	0	0	**16**	**263**	0	**279**	**722**
08:00 AM	**56**	0	21	**77**	0	215	21	236	0	0	0	0	14	240	0	254	567
08:15 AM	40	0	29	69	0	282	**44**	326	0	0	0	0	7	190	0	197	592
Total Volume	146	0	97	243	0	1267	141	1408	0	0	0	0	45	835	0	880	2531
% App. Total	60.1	0	39.9		0	90	10		0	0	0		5.1	94.9	0		
PHF	.652	.000	.836	.789	.000	.776	.801	.786	.000	.000	.000	.000	.703	.794	.000	.789	.876

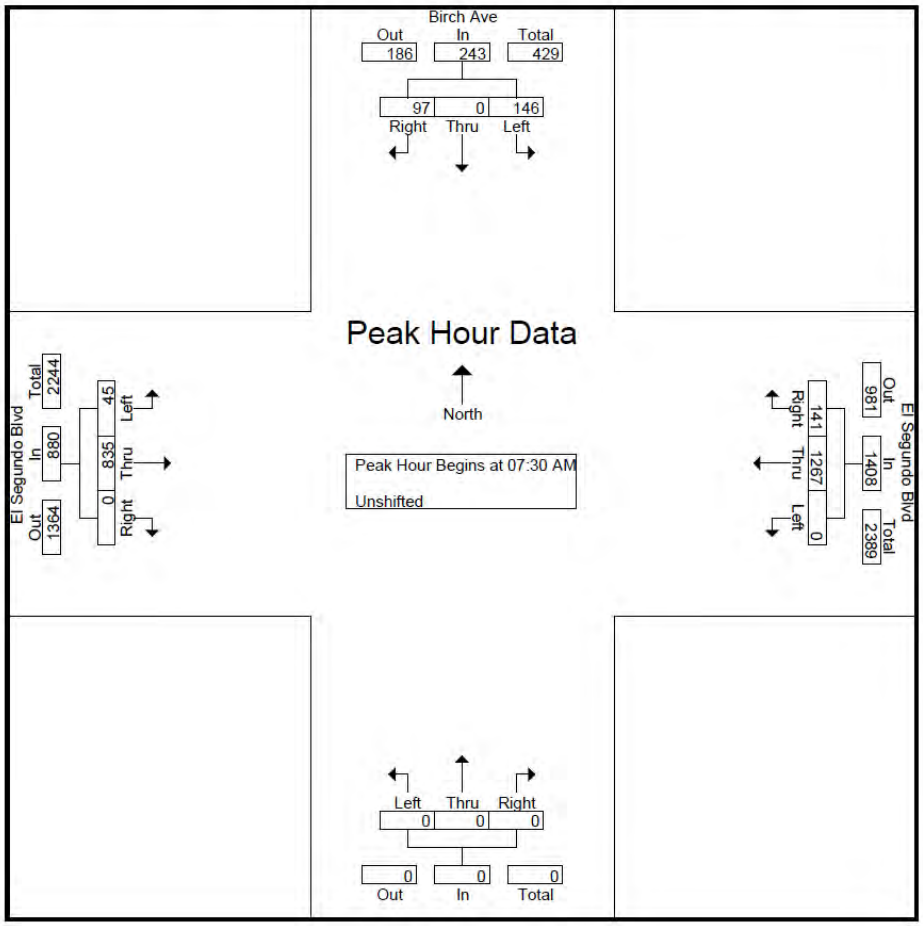

CITY TRAFFIC COUNTERS
WWW.CTCOUNTERS.COM

File Name : Birch_ElSegundo
Site Code : 00000000
Start Date : 9/16/2015
Page No : 3

	Birch Ave Southbound				El Segundo Blvd Westbound				Northbound				El Segundo Blvd Eastbound				
Start Time	Left	Thru	Right	App. Total	Left	Thru	Right	App. Total	Left	Thru	Right	App. Total	Left	Thru	Right	App. Total	Int. Total
Peak Hour Analysis From 12:00 PM to 05:45 PM - Peak 1 of 1																	
Peak Hour for Entire Intersection Begins at 04:45 PM																	
04:45 PM	**52**	0	30	82	0	232	13	245	0	0	0	0	14	387	0	401	728
05:00 PM	49	0	29	78	0	**250**	18	**268**	0	0	0	0	15	414	0	429	**775**
05:15 PM	44	0	25	69	0	219	**25**	244	0	0	0	0	**21**	350	0	371	684
05:30 PM	50	0	**36**	**86**	0	217	20	237	0	0	0	0	10	**424**	0	**434**	757
Total Volume	195	0	120	315	0	918	76	994	0	0	0	0	60	1575	0	1635	2944
% App. Total	61.9	0	38.1		0	92.4	7.6		0	0	0		3.7	96.3	0		
PHF	.938	.000	.833	.916	.000	.918	.760	.927	.000	.000	.000	.000	.714	.929	.000	.942	.950

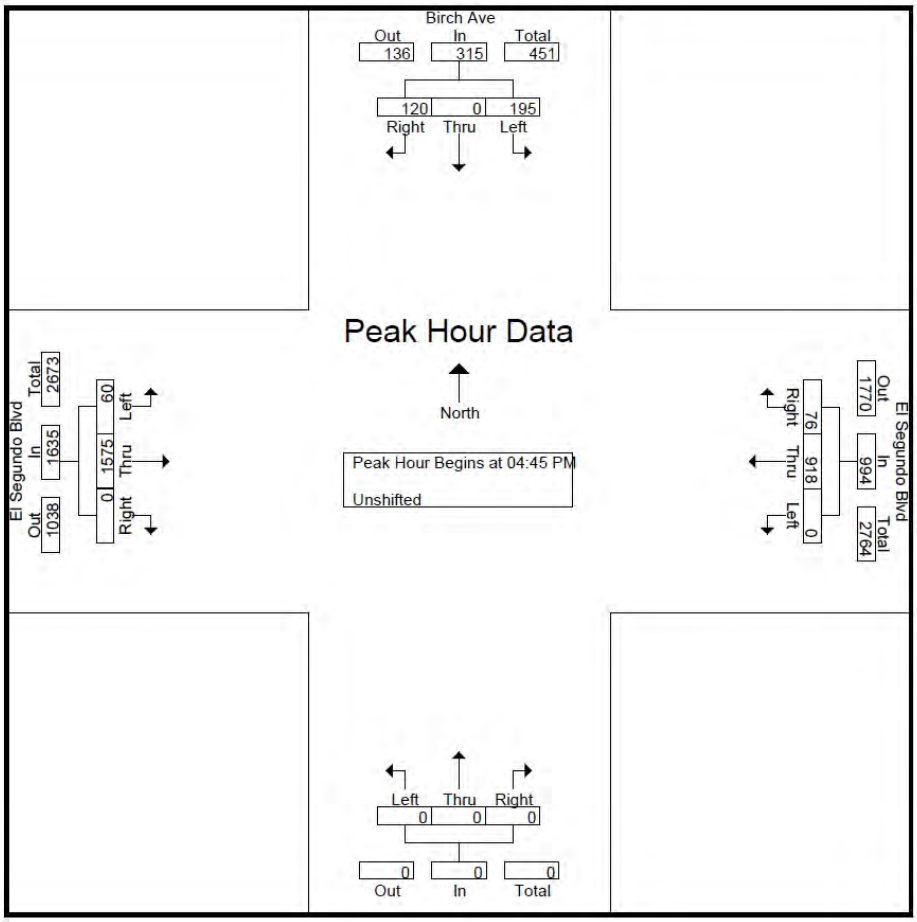

BIRCH AVENUE AND 120TH STREET

CITY TRAFFIC COUNTERS
WWW.CTCOUNTERS.COM

File Name : Birch_120th
Site Code : 00000000
Start Date : 9/16/2015
Page No : 1

Groups Printed- Unshifted

	Birch Ave Southbound			120th Street Westbound			Birch Ave Northbound			120th Street Eastbound			
Start Time	Left	Thru	Right	Left	Thru	Right	Left	Thru	Right	Left	Thru	Right	Int. Total
07:00 AM	1	7	3	36	127	4	23	8	5	1	79	42	336
07:15 AM	7	11	3	32	146	8	27	12	4	0	80	18	348
07:30 AM	12	17	8	34	255	6	28	35	8	1	121	14	539
07:45 AM	9	17	8	33	244	5	41	19	14	2	167	25	584
Total	29	52	22	135	772	23	119	74	31	4	447	99	1807
08:00 AM	4	26	4	40	195	4	23	5	12	1	152	38	504
08:15 AM	3	13	7	33	198	6	18	12	11	1	152	35	489
08:30 AM	6	6	3	27	165	7	27	14	19	3	134	30	441
08:45 AM	8	10	0	25	157	5	20	12	13	2	123	20	395
Total	21	55	14	125	715	22	88	43	55	7	561	123	1829
04:00 PM	1	12	2	12	95	1	19	8	29	3	307	35	524
04:15 PM	0	6	4	15	81	4	22	11	34	6	316	19	518
04:30 PM	4	9	4	4	115	3	15	13	22	5	292	24	510
04:45 PM	2	10	7	21	110	1	9	10	49	1	266	37	523
Total	7	37	17	52	401	9	65	42	134	15	1181	115	2075
05:00 PM	4	9	3	7	90	1	26	16	51	2	257	29	495
05:15 PM	2	15	5	14	95	4	23	15	35	2	308	41	559
05:30 PM	5	12	1	9	112	1	23	9	26	2	287	37	524
05:45 PM	5	15	1	11	118	6	30	8	34	5	280	45	558
Total	16	51	10	41	415	12	102	48	146	11	1132	152	2136
Grand Total	73	195	63	353	2303	66	374	207	366	37	3321	489	7847
Apprch %	22.1	58.9	19	13	84.6	2.4	39.5	21.9	38.6	1	86.3	12.7	
Total %	0.9	2.5	0.8	4.5	29.3	0.8	4.8	2.6	4.7	0.5	42.3	6.2	

CITY TRAFFIC COUNTERS
WWW.CTCOUNTERS.COM

File Name : Birch_120th
Site Code : 00000000
Start Date : 9/16/2015
Page No : 2

	Birch Ave Southbound				120th Street Westbound				Birch Ave Northbound				120th Street Eastbound				
Start Time	Left	Thru	Right	App. Total	Left	Thru	Right	App. Total	Left	Thru	Right	App. Total	Left	Thru	Right	App. Total	Int. Total
Peak Hour Analysis From 07:00 AM to 11:45 AM - Peak 1 of 1																	
Peak Hour for Entire Intersection Begins at 07:30 AM																	
07:30 AM	**12**	17	**8**	**37**	34	**255**	**6**	**295**	28	**35**	8	71	1	121	14	136	539
07:45 AM	9	17	8	34	33	244	5	282	**41**	19	**14**	**74**	**2**	**167**	25	**194**	**584**
08:00 AM	4	**26**	4	34	**40**	195	4	239	23	5	12	40	1	152	**38**	191	504
08:15 AM	3	13	7	23	33	198	6	237	18	12	11	41	1	152	35	188	489
Total Volume	28	73	27	128	140	892	21	1053	110	71	45	226	5	592	112	709	2116
% App. Total	21.9	57	21.1		13.3	84.7	2		48.7	31.4	19.9		0.7	83.5	15.8		
PHF	.583	.702	.844	.865	.875	.875	.875	.892	.671	.507	.804	.764	.625	.886	.737	.914	.906

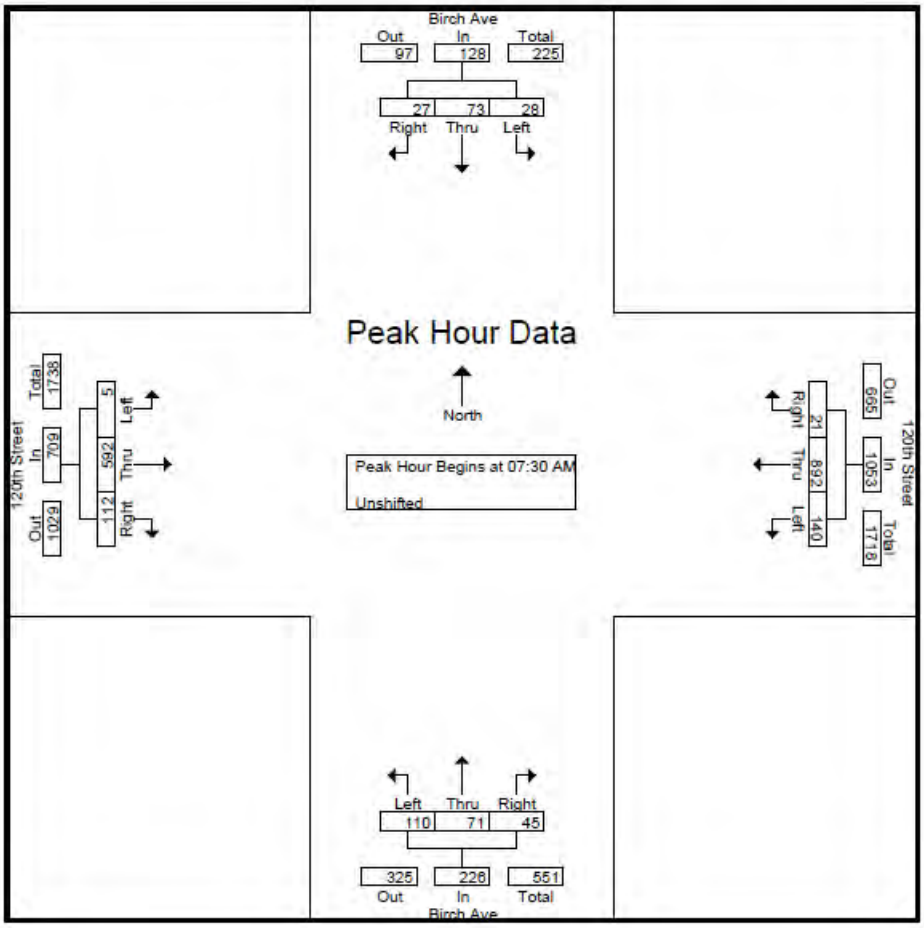

CITY TRAFFIC COUNTERS
WWW.CTCOUNTERS.COM

File Name : Birch_120th
Site Code : 00000000
Start Date : 9/16/2015
Page No : 3

	Birch Ave Southbound				120th Street Westbound				Birch Ave Northbound				120th Street Eastbound				
Start Time	Left	Thru	Right	App. Total	Left	Thru	Right	App. Total	Left	Thru	Right	App. Total	Left	Thru	Right	App. Total	Int. Total
Peak Hour Analysis From 12:00 PM to 05:45 PM - Peak 1 of 1																	
Peak Hour for Entire Intersection Begins at 05:00 PM																	
05:00 PM	4	9	3	16	7	90	1	98	26	16	51	93	2	257	29	288	495
05:15 PM	2	15	5	22	14	95	4	113	23	15	35	73	2	308	41	351	559
05:30 PM	5	12	1	18	9	112	1	122	23	9	26	58	2	287	37	326	524
05:45 PM	5	15	1	21	11	118	6	135	30	8	34	72	5	280	45	330	558
Total Volume	16	51	10	77	41	415	12	468	102	48	146	296	11	1132	152	1295	2136
% App. Total	20.8	66.2	13		8.8	88.7	2.6		34.5	16.2	49.3		0.8	87.4	11.7		
PHF	.800	.850	.500	.875	.732	.879	.500	.867	.850	.750	.716	.796	.550	.919	.844	.922	.955

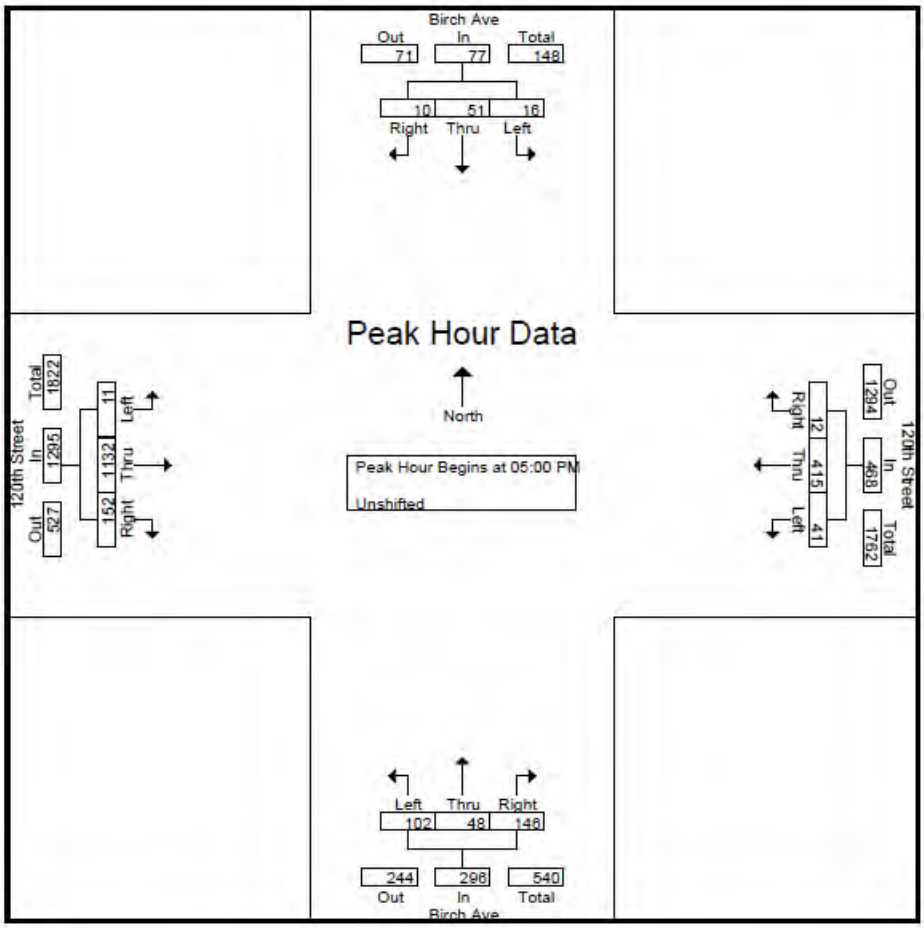

EXISTING ARTERIAL MID-BLOCK

24-HOUR DAILY TRAFFIC COUNTS

CITY TRAFFIC COUNTERS
626.991.7522
www.ctcounters.com

120th St
E/O Prairie Ave

Start Time	18-Feb-15 Wed	West Morning	West Afternoon	Hour Totals Morning	Hour Totals Afternoon	East Morning	East Afternoon	Hour Totals Morning	Hour Totals Afternoon	Combined Totals Morning	Combined Totals Afternoon
12:00		19	98			23	159				
12:15		18	112			32	134				
12:30		20	98			27	138				
12:45		14	112	71	420	20	136	102	567	173	987
01:00		11	108			17	147				
01:15		8	117			12	142				
01:30		11	106			14	202				
01:45		13	146	43	477	12	168	55	659	98	1136
02:00		14	131			17	188				
02:15		9	136			28	224				
02:30		10	107			18	238				
02:45		4	120	37	494	26	254	89	904	126	1398
03:00		11	122			14	262				
03:15		6	110			20	303				
03:30		8	120			19	326				
03:45		10	119	35	471	23	313	76	1204	111	1675
04:00		8	125			26	325				
04:15		13	110			42	334				
04:30		29	151			39	323				
04:45		27	143	77	529	45	342	152	1324	229	1853
05:00		28	150			68	307				
05:15		27	141			76	313				
05:30		41	140			86	310				
05:45		36	143	132	574	112	322	342	1252	474	1826
06:00		55	143			110	340				
06:15		67	118			120	318				
06:30		76	112			146	317				
06:45		106	127	304	500	158	260	534	1235	838	1735
07:00		128	116			177	270				
07:15		166	102			178	190				
07:30		196	96			154	172				
07:45		203	88	693	402	192	158	701	790	1394	1192
08:00		202	90			184	162				
08:15		188	76			178	114				
08:30		141	82			175	120				
08:45		134	88	665	336	162	106	699	502	1364	838
09:00		98	60			156	86				
09:15		75	88			148	98				
09:30		99	72			164	92				
09:45		88	56	360	276	144	84	612	360	972	636
10:00		83	55			96	71				
10:15		88	53			134	54				
10:30		114	48			136	58				
10:45		102	37	387	193	128	43	494	226	881	419
11:00		94	27			123	55				
11:15		83	30			130	30				
11:30		86	33			126	32				
11:45		94	24	357	114	142	44	521	161	878	275
Total		3161	4786			4377	9184			7538	13970
Percent		39.8%	60.2%			32.3%	67.7%			35.0%	65.0%
Grand Total		3161	4786			4377	9184			7538	13970
Percent		39.8%	60.2%			32.3%	67.7%			35.0%	65.0%
ADT		ADT 21,508		AADT 21,508							

CITY TRAFFIC COUNTERS
626.991.7522
www.ctcounters.com

120th St
Bt Inglewood Ave & Hawthorne Blvd

Start Time	18-Feb-15 Wed	West Morning	West Afternoon	Hour Totals Morning	Hour Totals Afternoon	East Morning	East Afternoon	Hour Totals Morning	Hour Totals Afternoon	Combined Totals Morning	Combined Totals Afternoon
12:00		14	98			38	135				
12:15		9	96			32	118				
12:30		10	88			14	134				
12:45		10	116	43	398	19	146	103	533	146	931
01:00		6	108			5	116				
01:15		7	97			18	115				
01:30		6	130			11	156				
01:45		4	136	23	471	5	132	39	519	62	990
02:00		8	140			8	232				
02:15		10	127			12	191				
02:30		7	109			5	216				
02:45		12	127	37	503	7	222	32	861	69	1364
03:00		5	123			8	234				
03:15		8	112			4	297				
03:30		8	87			10	300				
03:45		17	118	38	440	16	306	38	1137	76	1577
04:00		11	111			9	277				
04:15		22	86			16	328				
04:30		24	105			19	306				
04:45		37	100	94	402	32	304	76	1215	170	1617
05:00		25	153			27	352				
05:15		34	104			23	356				
05:30		70	116			43	344				
05:45		68	112	197	485	42	316	135	1368	332	1853
06:00		78	122			48	330				
06:15		92	112			65	310				
06:30		124	107			84	290				
06:45		144	116	438	457	92	222	289	1152	727	1609
07:00		144	86			90	226				
07:15		204	82			116	194				
07:30		219	98			132	146				
07:45		206	72	773	338	145	156	483	722	1256	1060
08:00		262	74			178	118				
08:15		232	58			200	113				
08:30		188	88			164	101				
08:45		159	59	841	279	140	98	682	430	1523	709
09:00		133	50			112	61				
09:15		92	44			100	66				
09:30		115	59			111	54				
09:45		80	56	420	209	114	62	437	243	857	452
10:00		85	29			92	66				
10:15		84	43			99	44				
10:30		90	36			98	52				
10:45		98	22	357	130	106	39	395	201	752	331
11:00		88	24			106	36				
11:15		100	18			105	32				
11:30		139	19			120	36				
11:45		92	19	419	80	122	22	453	126	872	206
Total		3680	4192			3162	8507			6842	12699
Percent		46.7%	53.3%			27.1%	72.9%			35.0%	65.0%
Grand Total		3680	4192			3162	8507			6842	12699
Percent		46.7%	53.3%			27.1%	72.9%			35.0%	65.0%
ADT	ADT 19,541		AADT 19,541								

CITY TRAFFIC COUNTERS
626.991.7522
www.ctcounters.com

Hawthorne Blvd
Bt El Segundo Blvd & 135th St

Start Time	19-Feb-15 Thu	North Morning	North Afternoon	Hour Totals Morning	Hour Totals Afternoon	South Morning	South Afternoon	Hour Totals Morning	Hour Totals Afternoon	Combined Totals Morning	Combined Totals Afternoon
12:00		16	116			36	268				
12:15		14	144			38	222				
12:30		20	198			44	236				
12:45		23	122	73	580	32	222	150	948	223	1528
01:00		22	194			17	231				
01:15		17	216			26	178				
01:30		12	182			18	198				
01:45		22	182	73	774	22	201	83	808	156	1582
02:00		14	196			26	217				
02:15		16	198			17	233				
02:30		15	237			16	220				
02:45		10	240	55	871	24	256	83	926	138	1797
03:00		18	220			18	298				
03:15		8	224			21	345				
03:30		16	231			14	326				
03:45		16	247	58	922	20	320	73	1289	131	2211
04:00		15	252			11	291				
04:15		24	244			10	315				
04:30		28	261			17	318				
04:45		43	264	110	1021	13	324	51	1248	161	2269
05:00		26	310			21	352				
05:15		35	356			22	340				
05:30		54	336			31	364				
05:45		79	371	194	1373	38	330	112	1386	306	2759
06:00		66	330			52	360				
06:15		88	326			46	318				
06:30		100	320			65	294				
06:45		154	288	408	1264	74	244	237	1216	645	2480
07:00		156	252			88	290				
07:15		182	248			141	249				
07:30		240	230			190	217				
07:45		284	224	862	954	190	165	609	921	1471	1875
08:00		286	230			253	212				
08:15		303	202			230	190				
08:30		236	221			220	150				
08:45		205	158	1030	811	175	146	878	698	1908	1509
09:00		180	124			191	149				
09:15		173	128			186	127				
09:30		156	127			174	106				
09:45		190	123	699	502	140	94	691	476	1390	978
10:00		186	98			195	93				
10:15		195	78			181	76				
10:30		155	45			188	73				
10:45		242	42	778	263	186	66	750	308	1528	571
11:00		180	38			212	90				
11:15		180	28			174	62				
11:30		218	15			227	46				
11:45		162	22	740	103	211	38	824	236	1564	339
Total		5080	9438			4541	10460			9621	19898
Percent		35.0%	65.0%			30.3%	69.7%			32.6%	67.4%
Grand Total		5080	9438			4541	10460			9621	19898
Percent		35.0%	65.0%			30.3%	69.7%			32.6%	67.4%
ADT		ADT 29,519		AADT 29,519							

CITY TRAFFIC COUNTERS
626.991.7522
www.ctcounters.com

Imperial Hwy
Bt Inglewood Ave & Hawthorne Blvd

Start Time	18-Feb-15 Wed	West Morning	West Afternoon	Hour Totals Morning	Hour Totals Afternoon	East Morning	East Afternoon	Hour Totals Morning	Hour Totals Afternoon	Combined Totals Morning	Combined Totals Afternoon
12:00		56	159			64	164				
12:15		44	162			63	144				
12:30		41	164			53	154				
12:45		28	162	169	647	38	146	218	608	387	1255
01:00		38	150			42	169				
01:15		20	174			23	176				
01:30		13	156			30	174				
01:45		22	159	93	639	25	190	120	709	213	1348
02:00		20	171			28	242				
02:15		20	162			20	264				
02:30		19	171			32	324				
02:45		22	159	81	663	23	352	103	1182	184	1845
03:00		18	160			20	390				
03:15		16	151			26	380				
03:30		18	162			17	368				
03:45		22	158	74	631	23	456	86	1594	160	2225
04:00		16	148			20	434				
04:15		22	190			24	431				
04:30		28	183			36	426				
04:45		25	178	91	699	30	446	110	1737	201	2436
05:00		25	182			36	414				
05:15		51	197			39	450				
05:30		85	188			44	444				
05:45		102	182	263	749	63	460	182	1768	445	2517
06:00		119	179			66	386				
06:15		150	188			88	396				
06:30		233	175			107	387				
06:45		270	151	772	693	103	337	364	1506	1136	2199
07:00		328	162			132	376				
07:15		388	166			136	266				
07:30		468	151			164	232				
07:45		464	142	1648	621	175	230	607	1104	2255	1725
08:00		440	137			166	162				
08:15		385	134			155	139				
08:30		355	141			164	118				
08:45		305	135	1485	547	138	89	623	508	2108	1055
09:00		287	129			144	86				
09:15		258	119			117	89				
09:30		230	106			118	106				
09:45		187	84	962	438	126	102	505	383	1467	821
10:00		161	81			141	96				
10:15		156	72			138	120				
10:30		175	70			140	102				
10:45		162	61	654	284	130	92	549	410	1203	694
11:00		158	57			109	80				
11:15		161	55			170	80				
11:30		172	56			162	46				
11:45		176	42	667	210	149	71	590	277	1257	487
Total		6959	6821			4057	11786			11016	18607
Percent		50.5%	49.5%			25.6%	74.4%			37.2%	62.8%
Grand Total		6959	6821			4057	11786			11016	18607
Percent		50.5%	49.5%			25.6%	74.4%			37.2%	62.8%
ADT		ADT 29,623		AADT 29,623							

CITY TRAFFIC COUNTERS
626.991.7522
www.ctcounters.com

El Segundo Blvd
Bt Inglewood Ave & Hawthorne Blvd

Start Time	19-Feb-15 Thu	West Morning	West Afternoon	Hour Totals Morning	Hour Totals Afternoon	East Morning	East Afternoon	Hour Totals Morning	Hour Totals Afternoon	Combined Totals Morning	Combined Totals Afternoon
12:00		24	183			38	203				
12:15		23	216			37	173				
12:30		15	203			28	160				
12:45		11	198	73	800	24	194	127	730	200	1530
01:00		17	218			31	200				
01:15		11	200			44	220				
01:30		17	208			14	197				
01:45		23	203	68	829	17	252	106	869	174	1698
02:00		13	212			16	230				
02:15		12	232			12	317				
02:30		11	258			13	320				
02:45		15	221	51	923	11	376	52	1243	103	2166
03:00		24	250			20	415				
03:15		34	222			15	389				
03:30		24	246			20	428				
03:45		20	246	102	964	15	397	70	1629	172	2593
04:00		37	237			24	392				
04:15		45	218			33	420				
04:30		57	248			30	460				
04:45		70	218	209	921	30	428	117	1700	326	2621
05:00		70	230			28	449				
05:15		132	200			40	400				
05:30		122	202			71	428				
05:45		162	197	486	829	60	425	199	1702	685	2531
06:00		214	206			78	314				
06:15		294	184			88	318				
06:30		326	204			108	226				
06:45		305	174	1139	768	128	242	402	1100	1541	1868
07:00		346	183			136	190				
07:15		356	124			160	208				
07:30		377	134			177	202				
07:45		334	163	1413	604	258	191	731	791	2144	1395
08:00		350	144			260	132				
08:15		291	112			222	128				
08:30		313	107			180	114				
08:45		273	114	1227	477	181	128	843	502	2070	979
09:00		224	98			150	86				
09:15		215	86			157	96				
09:30		186	84			160	111				
09:45		182	86	807	354	178	106	645	399	1452	753
10:00		204	74			148	112				
10:15		180	53			149	76				
10:30		171	74			108	72				
10:45		192	46	747	247	174	62	579	322	1326	569
11:00		196	53			152	75				
11:15		204	38			161	65				
11:30		172	26			164	46				
11:45		206	33	778	150	197	53	674	239	1452	389
Total		7100	7866			4545	11226			11645	19092
Percent		47.4%	52.6%			28.8%	71.2%			37.9%	62.1%
Grand Total		7100	7866			4545	11226			11645	19092
Percent		47.4%	52.6%			28.8%	71.2%			37.9%	62.1%
ADT		ADT 30,737		AADT 30,737							

CITY TRAFFIC COUNTERS
626.991.7522
www.ctcounters.com

El Segundo Blvd
Bt Prairie Ave & Yukon Ave

Start Time	19-Feb-15 Thu	West Morning	West Afternoon	Hour Totals Morning	Hour Totals Afternoon	East Morning	East Afternoon	Hour Totals Morning	Hour Totals Afternoon	Combined Totals Morning	Combined Totals Afternoon
12:00		39	180			54	208				
12:15		48	177			54	218				
12:30		44	206			56	256				
12:45		24	226	155	789	44	281	208	963	363	1752
01:00		24	209			38	248				
01:15		24	202			30	223				
01:30		23	181			36	246				
01:45		21	194	92	786	33	260	137	977	229	1763
02:00		18	204			33	303				
02:15		23	215			30	272				
02:30		12	255			23	288				
02:45		12	286	65	960	14	322	100	1185	165	2145
03:00		26	244			32	342				
03:15		19	255			30	354				
03:30		22	214			36	371				
03:45		21	286	88	999	30	378	128	1445	216	2444
04:00		23	254			42	397				
04:15		16	253			28	425				
04:30		24	238			47	410				
04:45		43	251	106	996	57	436	174	1668	280	2664
05:00		39	256			62	444				
05:15		38	281			74	460				
05:30		44	246			82	422				
05:45		87	240	208	1023	132	418	350	1744	558	2767
06:00		80	222			152	410				
06:15		111	232			154	396				
06:30		201	216			160	358				
06:45		278	206	670	876	180	318	646	1482	1316	2358
07:00		288	201			158	286				
07:15		312	162			168	252				
07:30		357	152			258	226				
07:45		364	149	1321	664	274	184	858	948	2179	1612
08:00		344	128			240	154				
08:15		336	145			236	159				
08:30		344	147			216	142				
08:45		330	108	1354	528	258	137	950	592	2304	1120
09:00		302	126			280	125				
09:15		266	134			276	120				
09:30		224	123			293	116				
09:45		218	104	1010	487	226	95	1075	456	2085	943
10:00		211	86			237	100				
10:15		176	75			202	64				
10:30		185	73			227	70				
10:45		174	62	746	296	224	66	890	300	1636	596
11:00		160	65			212	56				
11:15		196	68			224	68				
11:30		156	44			211	74				
11:45		192	42	704	219	226	56	873	254	1577	473
Total		6519	8623			6389	12014			12908	20637
Percent		43.1%	56.9%			34.7%	65.3%			38.5%	61.5%
Grand Total		6519	8623			6389	12014			12908	20637
Percent		43.1%	56.9%			34.7%	65.3%			38.5%	61.5%
ADT		ADT 33,545		AADT 33,545							

INTERSECTION LEVEL OF SERVICE ANALYSIS SHEETS

INTERSECTION CAPACITY UTILIZATION ANALYSIS

Location: Prairie Avenue and 120th Street **City:** Hawthorne
Project No.: EBA2014-31 **Analyzed By:** MYR **File Name:** 2014-31-01 1

Problem Condition: Existing 2015 Traffic Conditions (Count Date: 2-18-15)
Existing Geometric Configuration

Movement	Available Lanes		Peak Hour Volumes								Movement V/C Per Lane		Critical V/C	
			Existing		Other Proj.		Project		Study Vol.					
	No.	Cap.	AM	PM	AM	PM	AM	PM	AM	PM	AM	PM	AM	PM
N/B Left	1.0	1600	222	169	0	0	0	0	222	169	0.139	0.106	0.139	
N/B Thru	3.0	4800	993	801	0	0	0	0	993	801	0.271	0.241		0.241
N/B Right	0.0	0	307	354	0	0	0	0	307	354	0.000	0.000		
S/B Left	1.0	1600	66	233	0	0	0	0	66	233	0.041	0.146		0.146
S/B Thru	3.0	4800	912	1068	0	0	0	0	912	1068	0.230	0.244	0.230	
S/B Right	0.0	0	190	102	0	0	0	0	190	102	0.000	0.000		
E/B Left	1.0	1600	93	91	0	0	0	0	93	91	0.058	0.057	0.058	
E/B Thru	2.0	3200	366	989	0	0	0	0	366	989	0.158	0.341		0.341
E/B Right	0.0	0	141	102	0	0	0	0	141	102	0.000	0.000		
W/B Left	1.0	1600	145	184	0	0	0	0	145	184	0.091	0.115		0.115
W/B Thru	2.0	3200	609	355	0	0	0	0	609	355	0.212	0.138	0.212	
W/B Right	0.0	0	69	85	0	0	0	0	69	85	0.000	0.000		
	ANALYSIS RESULTS :								Sum Of Critical V/C:				0.638	0.842
									Lost Time:				0.100	0.100
									Total V/C:				0.738	0.942
									Level Of Service:				C	E

ASSUMPTIONS AND METHODOLOGY

Existing Counts Year: 2015
Study Volume Year: 2015
Annual Growth Factor: 0.26 Percent

Lane Capacity
Single Through Lane = 1600 Vehicles Per Hour
Single Turn Lane = 1600 Vehicles Per Hour
Dual Turn Lane = 2880 Vehicles Per Hour

Level Of Service Definition

Total V/C	LOS
Under 0.605	A
0.605 - 0.704	B
0.705 - 0.804	C
0.805 - 0.904	D
0.905 - 1.004	E
Over 1.005	F

Lost time for signal Yellow and All red intervals: 0.10 of V/C Ratio

NOTES:

EVAN BROOKS ASSOCIATES, PASADENA, CALIFORNIA

INTERSECTION CAPACITY UTILIZATION ANALYSIS

Location: Prairie Avenue and 120th Street **City:** Hawthorne
Project No.: EBA2014-31 **Analyzed By:** MYR **File Name:** 2014-31-01 2

Problem Condition: Future 2020 Traffic Volumes with Ambient Growth
Existing Geometric Configuration

Movement	Available Lanes		Peak Hour Volumes								Movement V/C Per Lane		Critical V/C	
			Existing		Other Proj.		Project		Study Vol.					
	No.	Cap.	AM	PM	AM	PM	AM	PM	AM	PM	AM	PM	AM	PM
N/B Left	1.0	1600	222	169	0	0	0	0	225	171	0.141	0.107	0.141	
N/B Thru	3.0	4800	993	801	0	0	0	0	1006	811	0.274	0.244		0.244
N/B Right	0.0	0	307	354	0	0	0	0	311	359	0.000	0.000		
S/B Left	1.0	1600	66	233	0	0	0	0	67	236	0.042	0.148		0.148
S/B Thru	3.0	4800	912	1068	0	0	0	0	924	1082	0.233	0.247	0.233	
S/B Right	0.0	0	190	102	0	0	0	0	192	103	0.000	0.000		
E/B Left	1.0	1600	93	91	0	0	0	0	94	92	0.059	0.058	0.059	
E/B Thru	2.0	3200	366	989	0	0	0	0	371	1002	0.161	0.345		0.345
E/B Right	0.0	0	141	102	0	0	0	0	143	103	0.000	0.000		
W/B Left	1.0	1600	145	184	0	0	0	0	147	186	0.092	0.117		0.117
W/B Thru	2.0	3200	609	355	0	0	0	0	617	360	0.215	0.139	0.215	
W/B Right	0.0	0	69	85	0	0	0	0	70	86	0.000	0.000		
	ANALYSIS RESULTS :								Sum Of Critical V/C:				0.647	0.853
									Lost Time:				0.100	0.100
									Total V/C:				0.747	0.953
									Level Of Service:				C	E

ASSUMPTIONS AND METHODOLOGY

Existing Counts Year: 2015
Study Volume Year: 2020
Annual Growth Factor: 0.26 Percent

Lane Capacity
Single Through Lane = 1600 Vehicles Per Hour
Single Turn Lane = 1600 Vehicles Per Hour
Dual Turn Lane = 2880 Vehicles Per Hour

Level Of Service Definition

Total V/C	LOS
Under 0.605	A
0.605 - 0.704	B
0.705 - 0.804	C
0.805 - 0.904	D
0.905 - 1.004	E
Over 1.005	F

Lost time for signal Yellow and All red intervals: 0.10 of V/C Ratio

NOTES:

EVAN BROOKS ASSOCIATES, PASADENA, CALIFORNIA

INTERSECTION CAPACITY UTILIZATION ANALYSIS

Location: Prairie Avenue and 120th Street **City:** Hawthorne
Project No.: EBA2014-31 **Analyzed By:** MYR **File Name:** 2014-31-01 3

Problem Condition: Future 2020 Cumulative Traffic Volumes With Project
Existing Geometric Configuration

Movement	Available Lanes		Peak Hour Volumes								Movement V/C Per Lane		Critical V/C	
			Existing		Other Proj.		Project		Study Vol.					
	No.	Cap.	AM	PM	AM	PM	AM	PM	AM	PM	AM	PM	AM	PM
N/B Left	1.0	1600	222	169	0	0	0	0	225	171	0.141	0.107	0.141	
N/B Thru	3.0	4800	993	801	0	0	2	2	1008	814	0.275	0.244		0.244
N/B Right	0.0	0	307	354	0	0	0	0	311	359	0.000	0.000		
S/B Left	1.0	1600	66	233	0	0	0	0	67	236	0.042	0.148		0.148
S/B Thru	3.0	4800	912	1068	0	0	3	2	926	1084	0.241	0.256	0.241	
S/B Right	0.0	0	190	102	0	0	38	41	230	144	0.000	0.000		
E/B Left	1.0	1600	93	91	0	0	17	55	111	147	0.070	0.092	0.070	
E/B Thru	2.0	3200	366	989	0	0	19	57	390	1059	0.166	0.363		0.363
E/B Right	0.0	0	141	102	0	0	0	0	143	103	0.000	0.000		
W/B Left	1.0	1600	145	184	0	0	0	0	147	186	0.092	0.117		0.117
W/B Thru	2.0	3200	609	355	0	0	40	42	657	402	0.227	0.153	0.227	
W/B Right	0.0	0	69	85	0	0	0	0	70	86	0.000	0.000		
	ANALYSIS RESULTS :								Sum Of Critical V/C:				0.678	0.872
									Lost Time:				0.100	0.100
									Total V/C:				0.778	0.972
									Level Of Service:				C	E

ASSUMPTIONS AND METHODOLOGY

Existing Counts Year: 2015
Study Volume Year: 2020
Annual Growth Factor: 0.26 Percent

Lane Capacity
Single Through Lane = 1600 Vehicles Per Hour
Single Turn Lane = 1600 Vehicles Per Hour
Dual Turn Lane = 2880 Vehicles Per Hour

Level Of Service Definition

Total V/C	LOS
Under 0.605	A
0.605 - 0.704	B
0.705 - 0.804	C
0.805 - 0.904	D
0.905 - 1.004	E
Over 1.005	F

Lost time for signal Yellow and All red intervals: 0.10 of V/C Ratio

NOTES:

EVAN BROOKS ASSOCIATES, PASADENA, CALIFORNIA

INTERSECTION CAPACITY UTILIZATION ANALYSIS

Location: Prairie Avenue and 120th Street **City:** Hawthorne
Project No.: EBA2014-31 **Analyzed By:** MYR **File Name:** 2014-31-01 5

Problem Condition: Future 2035 Cumulative Traffic Volumes Without Project
Existing Geometric Configuration

Movement	Available Lanes		Peak Hour Volumes								Movement V/C Per Lane		Critical V/C	
			Existing		Other Proj.		Project		Study Vol.					
	No.	Cap.	AM	PM	AM	PM	AM	PM	AM	PM	AM	PM	AM	PM
N/B Left	1.0	1600	222	169	0	0	0	0	265	209	0.165	0.131	0.165	
N/B Thru	3.0	4800	993	801	0	0	0	0	1184	990	0.323	0.297		0.297
N/B Right	0.0	0	307	354	0	0	0	0	366	438	0.000	0.000		
S/B Left	1.0	1600	66	233	0	0	0	0	79	288	0.049	0.180		0.180
S/B Thru	3.0	4800	912	1068	0	0	0	0	1087	1320	0.274	0.301	0.274	
S/B Right	0.0	0	190	102	0	0	0	0	226	126	0.000	0.000		
E/B Left	1.0	1600	93	91	0	0	0	0	111	112	0.069	0.070	0.069	
E/B Thru	2.0	3200	366	989	0	0	0	0	436	1222	0.189	0.421		0.421
E/B Right	0.0	0	141	102	0	0	0	0	168	126	0.000	0.000		
W/B Left	1.0	1600	145	184	0	0	0	0	173	227	0.108	0.142		0.142
W/B Thru	2.0	3200	609	355	0	0	0	0	726	439	0.253	0.170	0.253	
W/B Right	0.0	0	69	85	0	0	0	0	82	105	0.000	0.000		
	ANALYSIS RESULTS :								Sum Of Critical V/C:				0.761	1.041
									Lost Time:				0.100	0.100
									Total V/C:				0.861	1.141
									Level Of Service:				D	F

ASSUMPTIONS AND METHODOLOGY

Existing Counts Year: 2015
Study Volume Year: 2020 (2035 for Cumulative)
Annual Growth Factor: 0.26 Percent

Lane Capacity
Single Through Lane = 1600 Vehicles Per Hour
Single Turn Lane = 1600 Vehicles Per Hour
Dual Turn Lane = 2880 Vehicles Per Hour

Level Of Service Definition

Total V/C	LOS
Under 0.605	A
0.605 - 0.704	B
0.705 - 0.804	C
0.805 - 0.904	D
0.905 - 1.004	E
Over 1.005	F

Lost time for signal Yellow and All red intervals: 0.10 of V/C Ratio

NOTES:

EVAN BROOKS ASSOCIATES, PASADENA, CALIFORNIA

INTERSECTION CAPACITY UTILIZATION ANALYSIS

Location: Prairie Avenue and 120th Street **City:** Hawthorne
Project No.: EBA2014-31 **Analyzed By:** MYR **File Name:** 2014-31-01 4

Problem Condition: Future 2035 Cumulative Traffic Volumes With Project
Existing Geometric Configuration

Movement	Available Lanes		Peak Hour Volumes								Movement V/C Per Lane		Critical V/C	
			Existing		Other Proj.		Project		Study Vol.					
	No.	Cap.	AM	PM	AM	PM	AM	PM	AM	PM	AM	PM	AM	PM
N/B Left	1.0	1600	222	169	0	0	0	0	265	209	0.165	0.131	0.165	
N/B Thru	3.0	4800	993	801	0	0	2	2	1186	992	0.323	0.298		0.298
N/B Right	0.0	0	307	354	0	0	0	0	366	438	0.000	0.000		
S/B Left	1.0	1600	66	233	0	0	0	0	79	288	0.049	0.180		0.180
S/B Thru	3.0	4800	912	1068	0	0	3	2	1090	1322	0.282	0.310	0.282	
S/B Right	0.0	0	190	102	0	0	38	41	264	167	0.000	0.000		
E/B Left	1.0	1600	93	91	0	0	17	55	128	168	0.080	0.105	0.080	
E/B Thru	2.0	3200	366	989	0	0	19	57	455	1280	0.195	0.439		0.439
E/B Right	0.0	0	141	102	0	0	0	0	168	126	0.000	0.000		
W/B Left	1.0	1600	145	184	0	0	0	0	173	227	0.108	0.142		0.142
W/B Thru	2.0	3200	609	355	0	0	40	42	766	481	0.265	0.183	0.265	
W/B Right	0.0	0	69	85	0	0	0	0	82	105	0.000	0.000		
	ANALYSIS RESULTS :								Sum Of Critical V/C:				0.793	1.059
									Lost Time:				0.100	0.100
									Total V/C:				0.893	1.159
									Level Of Service:				D	F

ASSUMPTIONS AND METHODOLOGY

Existing Counts Year: 2015
Study Volume Year: 2020 (2035 for Cumulative)
Annual Growth Factor: 0.26 Percent

Lane Capacity
Single Through Lane = 1600 Vehicles Per Hour
Single Turn Lane = 1600 Vehicles Per Hour
Dual Turn Lane = 2880 Vehicles Per Hour

Level Of Service Definition

Total V/C	LOS
Under 0.605	A
0.605 - 0.704	B
0.705 - 0.804	C
0.805 - 0.904	D
0.905 - 1.004	E
Over 1.005	F

Lost time for signal Yellow and All red intervals: 0.10 of V/C Ratio

NOTES:

EVAN BROOKS ASSOCIATES, PASADENA, CALIFORNIA

INTERSECTION CAPACITY UTILIZATION ANALYSIS

Location: Prairie Avenue and 120th Street **City:** Hawthorne
Project No.: EBA2014-31 **Analyzed By:** MYR **File Name:** 2014-31-01 6

Problem Condition: Future 2020 Cumulative Traffic Volumes With Project
Proposed Geometric Configuration with Mitigation

Movement	Available Lanes		Peak Hour Volumes								Movement V/C Per Lane		Critical V/C	
			Existing		Other Proj.		Project		Study Vol.					
	No.	Cap.	AM	PM	AM	PM	AM	PM	AM	PM	AM	PM	AM	PM
N/B Left	1.0	1600	222	169	0	0	0	0	225	171	0.141	0.107	0.141	
N/B Thru	3.0	4800	993	801	0	0	2	2	1008	814	0.275	0.244		0.244
N/B Right	0.0	0	307	354	0	0	0	0	311	359	0.000	0.000		
S/B Left	1.0	1600	66	233	0	0	0	0	67	236	0.042	0.148		0.148
S/B Thru	3.0	4800	912	1068	0	0	3	2	926	1084	0.241	0.256	0.241	
S/B Right	0.0	0	190	102	0	0	38	41	230	144	0.000	0.000		
E/B Left	1.0	1600	93	91	0	0	17	55	111	147	0.070	0.092	0.070	
E/B Thru	3.0	4800	366	989	0	0	19	57	390	1059	0.111	0.242		0.242
E/B Right	0.0	0	141	102	0	0	0	0	143	103	0.000	0.000		
W/B Left	1.0	1600	145	184	0	0	0	0	147	186	0.092	0.117		0.117
W/B Thru	2.0	3200	609	355	0	0	40	42	657	402	0.227	0.153	0.227	
W/B Right	0.0	0	69	85	0	0	0	0	70	86	0.000	0.000		
	ANALYSIS RESULTS :								Sum Of Critical V/C:				0.678	0.750
									Lost Time:				0.100	0.100
									Total V/C:				0.778	0.850
									Level Of Service:				C	D

ASSUMPTIONS AND METHODOLOGY

Existing Counts Year: 2015
Study Volume Year: 2020
Annual Growth Factor: 0.26 Percent

Lane Capacity
Single Through Lane = 1600 Vehicles Per Hour
Single Turn Lane = 1600 Vehicles Per Hour
Dual Turn Lane = 2880 Vehicles Per Hour

Level Of Service Definition

Total V/C	LOS
Under 0.605	A
0.605 - 0.704	B
0.705 - 0.804	C
0.805 - 0.904	D
0.905 - 1.004	E
Over 1.005	F

Lost time for signal Yellow and All red intervals: 0.10 of V/C Ratio

NOTES:

EVAN BROOKS ASSOCIATES, PASADENA, CALIFORNIA

INTERSECTION CAPACITY UTILIZATION ANALYSIS

Location: Prairie Avenue and 120th Street **City:** Hawthorne
Project No.: EBA2014-31 **Analyzed By:** MYR **File Name:** 2014-31-01 7

Problem Condition: Future 2035 Cumulative Traffic Volumes With Project
Proposed Geometric Configuration with Mitigation

Movement	Available Lanes		Peak Hour Volumes								Movement V/C Per Lane		Critical V/C	
			Existing		Other Proj.		Project		Study Vol.					
	No.	Cap.	AM	PM	AM	PM	AM	PM	AM	PM	AM	PM	AM	PM
N/B Left	1.0	1600	222	169	0	0	0	0	265	209	0.165	0.131	0.165	0.131
N/B Thru	3.0	4800	993	801	0	0	2	2	1186	992	0.247	0.207		
N/B Right	1.0	1600	307	354	0	0	0	0	366	438	0.175	0.202		
S/B Left	1.0	1600	66	233	0	0	0	0	79	288	0.049	0.180		
S/B Thru	3.0	4800	912	1068	0	0	3	2	1090	1322	0.227	0.275	0.227	0.275
S/B Right	1.0	1600	190	102	0	0	38	41	264	167	0.085	0.104		
E/B Left	1.0	1600	93	91	0	0	17	55	128	168	0.080	0.105	0.080	
E/B Thru	3.0	4800	366	989	0	0	19	57	455	1280	0.095	0.267		0.267
E/B Right	1.0	1600	141	102	0	0	0	0	168	126	0.105	0.079		
W/B Left	2.0	2880	145	184	0	0	0	0	173	227	0.060	0.079		0.079
W/B Thru	2.0	3200	609	355	0	0	40	42	766	481	0.265	0.183	0.265	
W/B Right	0.0	0	69	85	0	0	0	0	82	105	0.000	0.000		
	ANALYSIS RESULTS :								Sum Of Critical V/C:				0.737	0.752
									Lost Time:				0.100	0.100
									Total V/C:				0.837	0.852
									Level Of Service:				D	D

ASSUMPTIONS AND METHODOLOGY

Existing Counts Year: 2015
Study Volume Year: 2020 (2035 for Cumulative)
Annual Growth Factor: 0.26 Percent

Lane Capacity
Single Through Lane = 1600 Vehicles Per Hour
Single Turn Lane = 1600 Vehicles Per Hour
Dual Turn Lane = 2880 Vehicles Per Hour

Level Of Service Definition

Total V/C	LOS
Under 0.605	A
0.605 - 0.704	B
0.705 - 0.804	C
0.805 - 0.904	D
0.905 - 1.004	E
Over 1.005	F

Lost time for signal Yellow and All red intervals: 0.10 of V/C Ratio

NOTES:

EVAN BROOKS ASSOCIATES, PASADENA, CALIFORNIA

INTERSECTION CAPACITY UTILIZATION ANALYSIS

Location: Hawthorne Boulevard and 120th Street **City:** Hawthorne
Project No.: EBA2014-31 **Analyzed By:** MYR **File Name:** 2014-31-02 1

Problem Condition: Existing 2015 Traffic Conditions (Count Date: 2-18-15)
Existing Geometric Configuration

Movement	Available Lanes		Peak Hour Volumes								Movement V/C Per Lane		Critical V/C	
			Existing		Other Proj.		Project		Study Vol.					
	No.	Cap.	AM	PM	AM	PM	AM	PM	AM	PM	AM	PM	AM	PM
N/B Left	2.0	2880	185	92	0	0	0	0	185	92	0.064	0.032	0.064	0.032
N/B Thru	4.0	6400	744	838	0	0	0	0	744	838	0.133	0.150		
N/B Right	0.0	0	110	125	0	0	0	0	110	125	0.000	0.000		
S/B Left	2.0	2880	118	254	0	0	0	0	118	254	0.041	0.088		
S/B Thru	3.0	4800	590	1081	0	0	0	0	590	1081	0.123	0.225	0.123	0.225
S/B Right	1.0	1600	120	136	0	0	0	0	120	136	0.055	0.059		
E/B Left	2.0	2880	65	83	0	0	0	0	65	83	0.023	0.029	0.023	
E/B Thru	2.0	3200	396	1019	0	0	0	0	396	1019	0.149	0.351		0.351
E/B Right	0.0	0	82	103	0	0	0	0	82	103	0.000	0.000		
W/B Left	2.0	2880	98	206	0	0	0	0	98	206	0.034	0.072		0.072
W/B Thru	2.0	3200	809	374	0	0	0	0	809	374	0.300	0.155	0.300	
W/B Right	0.0	0	150	123	0	0	0	0	150	123	0.000	0.000		
	ANALYSIS RESULTS :								Sum Of Critical V/C:				0.509	0.679
									Lost Time:				0.100	0.100
									Total V/C:				0.609	0.779
									Level Of Service:				B	C

ASSUMPTIONS AND METHODOLOGY

Existing Counts Year: 2015
Study Volume Year: 2015
Annual Growth Factor: 0.26 Percent

Lane Capacity
Single Through Lane = 1600 Vehicles Per Hour
Single Turn Lane = 1600 Vehicles Per Hour
Dual Turn Lane = 2880 Vehicles Per Hour

Level Of Service Definition

Total V/C	LOS
Under 0.605	A
0.605 - 0.704	B
0.705 - 0.804	C
0.805 - 0.904	D
0.905 - 1.004	E
Over 1.005	F

Lost time for signal Yellow and All red intervals: 0.10 of V/C Ratio

NOTES:

EVAN BROOKS ASSOCIATES, PASADENA, CALIFORNIA

INTERSECTION CAPACITY UTILIZATION ANALYSIS

Location: Hawthorne Boulevard and 120th Street **City:** Hawthorne
Project No.: EBA2014-31 **Analyzed By:** MYR **File Name:** 2014-31-02 2

Problem Condition: Future 2020 Traffic Volumes with Ambient Growth
Existing Geometric Configuration

Movement	Available Lanes		Peak Hour Volumes								Movement V/C Per Lane		Critical V/C	
			Existing		Other Proj.		Project		Study Vol.					
	No.	Cap.	AM	PM	AM	PM	AM	PM	AM	PM	AM	PM	AM	PM
N/B Left	2.0	2880	185	92	0	0	0	0	187	93	0.065	0.032	0.065	0.032
N/B Thru	4.0	6400	744	838	0	0	0	0	754	849	0.135	0.152		
N/B Right	0.0	0	110	125	0	0	0	0	111	127	0.000	0.000		
S/B Left	2.0	2880	118	254	0	0	0	0	120	257	0.042	0.089		
S/B Thru	3.0	4800	590	1081	0	0	0	0	598	1095	0.125	0.228	0.125	0.228
S/B Right	1.0	1600	120	136	0	0	0	0	122	138	0.055	0.060		
E/B Left	2.0	2880	65	83	0	0	0	0	66	84	0.023	0.029	0.023	
E/B Thru	2.0	3200	396	1019	0	0	0	0	401	1032	0.151	0.355		0.355
E/B Right	0.0	0	82	103	0	0	0	0	83	104	0.000	0.000		
W/B Left	2.0	2880	98	206	0	0	0	0	99	209	0.034	0.072		0.072
W/B Thru	2.0	3200	809	374	0	0	0	0	820	379	0.304	0.157	0.304	
W/B Right	0.0	0	150	123	0	0	0	0	152	125	0.000	0.000		
	ANALYSIS RESULTS :								Sum Of Critical V/C:				0.516	0.688
									Lost Time:				0.100	0.100
									Total V/C:				0.616	0.788
									Level Of Service:				B	C

ASSUMPTIONS AND METHODOLOGY

Existing Counts Year: 2015
Study Volume Year: 2020
Annual Growth Factor: 0.26 Percent

Lane Capacity
Single Through Lane = 1600 Vehicles Per Hour
Single Turn Lane = 1600 Vehicles Per Hour
Dual Turn Lane = 2880 Vehicles Per Hour

Level Of Service Definition

Total V/C	LOS
Under 0.605	A
0.605 - 0.704	B
0.705 - 0.804	C
0.805 - 0.904	D
0.905 - 1.004	E
Over 1.005	F

Lost time for signal Yellow and All red intervals: 0.10 of V/C Ratio

NOTES:

EVAN BROOKS ASSOCIATES, PASADENA, CALIFORNIA

INTERSECTION CAPACITY UTILIZATION ANALYSIS

Location: Hawthorne Boulevard and 120th Street **City:** Hawthorne
Project No.: EBA2014-31 **Analyzed By:** MYR **File Name:** 2014-31-02 3

Problem Condition: Future 2020 Cumulative Traffic Volumes With Project
Existing Geometric Configuration

Movement	Available Lanes		Peak Hour Volumes								Movement V/C Per Lane		Critical V/C	
			Existing		Other Proj.		Project		Study Vol.					
	No.	Cap.	AM	PM	AM	PM	AM	PM	AM	PM	AM	PM	AM	PM
N/B Left	2.0	2880	185	92	0	0	15	46	203	139	0.070	0.048	0.070	0.048
N/B Thru	4.0	6400	744	838	0	0	82	211	836	1060	0.150	0.193		
N/B Right	0.0	0	110	125	0	0	15	46	127	173	0.000	0.000		
S/B Left	2.0	2880	118	254	0	0	0	0	120	257	0.042	0.089		
S/B Thru	3.0	4800	590	1081	0	0	159	168	757	1263	0.158	0.263	0.158	0.263
S/B Right	1.0	1600	120	136	0	0	0	0	122	138	0.055	0.060		
E/B Left	2.0	2880	65	83	0	0	0	0	66	84	0.023	0.029	0.023	
E/B Thru	2.0	3200	396	1019	0	0	28	32	430	1064	0.181	0.388		0.388
E/B Right	0.0	0	82	103	0	0	68	73	151	178	0.000	0.000		
W/B Left	2.0	2880	98	206	0	0	50	51	149	260	0.052	0.090		0.090
W/B Thru	2.0	3200	809	374	0	0	0	0	820	379	0.304	0.157	0.304	
W/B Right	0.0	0	150	123	0	0	0	0	152	125	0.000	0.000		
	ANALYSIS RESULTS :								Sum Of Critical V/C:				0.555	0.790
									Lost Time:				0.100	0.100
									Total V/C:				0.655	0.890
									Level Of Service:				B	D

ASSUMPTIONS AND METHODOLOGY

Existing Counts Year: 2015
Study Volume Year: 2020
Annual Growth Factor: 0.26 Percent

Lane Capacity
Single Through Lane = 1600 Vehicles Per Hour
Single Turn Lane = 1600 Vehicles Per Hour
Dual Turn Lane = 2880 Vehicles Per Hour

Level Of Service Definition

Total V/C	LOS
Under 0.605	A
0.605 - 0.704	B
0.705 - 0.804	C
0.805 - 0.904	D
0.905 - 1.004	E
Over 1.005	F

Lost time for signal Yellow and All red intervals: 0.10 of V/C Ratio

NOTES:

EVAN BROOKS ASSOCIATES, PASADENA, CALIFORNIA

INTERSECTION CAPACITY UTILIZATION ANALYSIS

Location: Hawthorne Boulevard and 120th Street **City:** Hawthorne
Project No.: EBA2014-31 **Analyzed By:** MYR **File Name:** 2014-31-02 5

Problem Condition: Future 2035 Cumulative Traffic Volumes Without Project
Existing Geometric Configuration

Movement	Available Lanes		Peak Hour Volumes								Movement V/C Per Lane		Critical V/C	
			Existing		Other Proj.		Project		Study Vol.					
	No.	Cap.	AM	PM	AM	PM	AM	PM	AM	PM	AM	PM	AM	PM
N/B Left	2.0	2880	185	92	0	0	0	0	221	114	0.077	0.039	0.077	0.039
N/B Thru	4.0	6400	744	838	0	0	0	0	887	1036	0.159	0.186		
N/B Right	0.0	0	110	125	0	0	0	0	131	155	0.000	0.000		
S/B Left	2.0	2880	118	254	0	0	0	0	141	314	0.049	0.109		
S/B Thru	3.0	4800	590	1081	0	0	0	0	703	1336	0.147	0.278	0.147	0.278
S/B Right	1.0	1600	120	136	0	0	0	0	143	168	0.065	0.073		
E/B Left	2.0	2880	65	83	0	0	0	0	77	103	0.027	0.036	0.027	
E/B Thru	2.0	3200	396	1019	0	0	0	0	472	1259	0.178	0.433		0.433
E/B Right	0.0	0	82	103	0	0	0	0	98	127	0.000	0.000		
W/B Left	2.0	2880	98	206	0	0	0	0	117	255	0.041	0.088		0.088
W/B Thru	2.0	3200	809	374	0	0	0	0	964	462	0.357	0.192	0.357	
W/B Right	0.0	0	150	123	0	0	0	0	179	152	0.000	0.000		
	ANALYSIS RESULTS :								Sum Of Critical V/C:				0.607	0.840
									Lost Time:				0.100	0.100
									Total V/C:				0.707	0.940
									Level Of Service:				C	E

ASSUMPTIONS AND METHODOLOGY

Existing Counts Year: 2015
Study Volume Year: 2020 (2035 for Cumulative)
Annual Growth Factor: 0.26 Percent

Lane Capacity
Single Through Lane = 1600 Vehicles Per Hour
Single Turn Lane = 1600 Vehicles Per Hour
Dual Turn Lane = 2880 Vehicles Per Hour

Level Of Service Definition

Total V/C	LOS
Under 0.605	A
0.605 - 0.704	B
0.705 - 0.804	C
0.805 - 0.904	D
0.905 - 1.004	E
Over 1.005	F

Lost time for signal Yellow and All red intervals: 0.10 of V/C Ratio

NOTES:

EVAN BROOKS ASSOCIATES, PASADENA, CALIFORNIA

INTERSECTION CAPACITY UTILIZATION ANALYSIS

Location: Hawthorne Boulevard and 120th Street **City:** Hawthorne
Project No.: EBA2014-31 **Analyzed By:** MYR **File Name:** 2014-31-02 4

Problem Condition: Future 2035 Cumulative Traffic Volumes With Project
Existing Geometric Configuration

Movement	Available Lanes		Peak Hour Volumes								Movement V/C Per Lane		Critical V/C	
			Existing		Other Proj.		Project		Study Vol.					
	No.	Cap.	AM	PM	AM	PM	AM	PM	AM	PM	AM	PM	AM	PM
N/B Left	2.0	2880	185	92	0	0	15	46	236	160	0.082	0.055	0.082	0.055
N/B Thru	4.0	6400	744	838	0	0	82	211	969	1247	0.174	0.226		
N/B Right	0.0	0	110	125	0	0	15	46	146	201	0.000	0.000		
S/B Left	2.0	2880	118	254	0	0	0	0	141	314	0.049	0.109		
S/B Thru	3.0	4800	590	1081	0	0	159	168	862	1504	0.180	0.313	0.180	0.313
S/B Right	1.0	1600	120	136	0	0	0	0	143	168	0.065	0.073		
E/B Left	2.0	2880	65	83	0	0	0	0	77	103	0.027	0.036	0.027	
E/B Thru	2.0	3200	396	1019	0	0	28	32	500	1291	0.208	0.466		0.466
E/B Right	0.0	0	82	103	0	0	68	73	166	201	0.000	0.000		
W/B Left	2.0	2880	98	206	0	0	50	51	166	306	0.058	0.106		0.106
W/B Thru	2.0	3200	809	374	0	0	0	0	964	462	0.357	0.192	0.357	
W/B Right	0.0	0	150	123	0	0	0	0	179	152	0.000	0.000		
	ANALYSIS RESULTS :								Sum Of Critical V/C:				0.646	0.941
									Lost Time:				0.100	0.100
									Total V/C:				0.746	1.041
									Level Of Service:				C	F

ASSUMPTIONS AND METHODOLOGY

Existing Counts Year: 2015
Study Volume Year: 2020 (2035 for Cumulative)
Annual Growth Factor: 0.26 Percent

Lane Capacity
Single Through Lane = 1600 Vehicles Per Hour
Single Turn Lane = 1600 Vehicles Per Hour
Dual Turn Lane = 2880 Vehicles Per Hour

Level Of Service Definition

Total V/C	LOS
Under 0.605	A
0.605 - 0.704	B
0.705 - 0.804	C
0.805 - 0.904	D
0.905 - 1.004	E
Over 1.005	F

Lost time for signal Yellow and All red intervals: 0.10 of V/C Ratio

NOTES:

EVAN BROOKS ASSOCIATES, PASADENA, CALIFORNIA

INTERSECTION CAPACITY UTILIZATION ANALYSIS

Location: Hawthorne Boulevard and 120th Street **City:** Hawthorne
Project No.: EBA2014-31 **Analyzed By:** MYR **File Name:** 2014-31-02 7

Problem Condition: Future 2035 Cumulative Traffic Volumes With Project
Proposed Geometric Configuration with Mitigation

Movement	Available Lanes		Peak Hour Volumes								Movement V/C Per Lane		Critical V/C	
			Existing		Other Proj.		Project		Study Vol.					
	No.	Cap.	AM	PM	AM	PM	AM	PM	AM	PM	AM	PM	AM	PM
N/B Left	2.0	2880	185	92	0	0	15	46	236	160	0.082	0.055		
N/B Thru	4.0	6400	744	838	0	0	82	211	969	1247	0.174	0.226	0.174	0.226
N/B Right	0.0	0	110	125	0	0	15	46	146	201	0.000	0.000		
S/B Left	2.0	2880	118	254	0	0	0	0	141	314	0.049	0.109	0.049	0.109
S/B Thru	4.0	6400	590	1081	0	0	159	168	862	1504	0.135	0.235		
S/B Right	1.0	1600	120	136	0	0	0	0	143	168	0.065	0.073		
E/B Left	2.0	2880	65	83	0	0	0	0	77	103	0.027	0.036	0.027	
E/B Thru	3.0	4800	396	1019	0	0	28	32	500	1291	0.139	0.311		0.311
E/B Right	0.0	0	82	103	0	0	68	73	166	201	0.000	0.000		
W/B Left	2.0	2880	98	206	0	0	50	51	166	306	0.058	0.106		0.106
W/B Thru	2.0	3200	809	374	0	0	0	0	964	462	0.357	0.192	0.357	
W/B Right	0.0	0	150	123	0	0	0	0	179	152	0.000	0.000		
	ANALYSIS RESULTS :								Sum Of Critical V/C:				0.607	0.752
									Lost Time:				0.100	0.100
									Total V/C:				0.707	0.852
									Level Of Service:				C	D

ASSUMPTIONS AND METHODOLOGY

Existing Counts Year: 2015
Study Volume Year: 2020 (2035 for Cumulative)
Annual Growth Factor: 0.26 Percent

Lane Capacity
Single Through Lane = 1600 Vehicles Per Hour
Single Turn Lane = 1600 Vehicles Per Hour
Dual Turn Lane = 2880 Vehicles Per Hour

Level Of Service Definition

Total V/C	LOS
Under 0.605	A
0.605 - 0.704	B
0.705 - 0.804	C
0.805 - 0.904	D
0.905 - 1.004	E
Over 1.005	F

Lost time for signal Yellow and All red intervals: 0.10 of V/C Ratio

NOTES:

EVAN BROOKS ASSOCIATES, PASADENA, CALIFORNIA

INTERSECTION CAPACITY UTILIZATION ANALYSIS

Location: Inglewood Avenue and 120th Street **City:** Hawthorne
Project No.: EBA2014-31 **Analyzed By:** MYR **File Name:** 2014-31-03 1

Problem Condition: Existing 2015 Traffic Conditions (Count Date: 2-18-15)
Existing Geometric Configuration

Movement	Available Lanes		Peak Hour Volumes								Movement V/C Per Lane		Critical V/C	
			Existing		Other Proj.		Project		Study Vol.					
	No.	Cap.	AM	PM	AM	PM	AM	PM	AM	PM	AM	PM	AM	PM
N/B Left	1.0	1600	130	49	0	0	0	0	130	49	0.081	0.031		
N/B Thru	2.0	3200	558	533	0	0	0	0	558	533	0.217	0.229	0.217	0.229
N/B Right	0.0	0	135	200	0	0	0	0	135	200	0.000	0.000		
S/B Left	1.0	1600	104	160	0	0	0	0	104	160	0.065	0.100	0.065	0.100
S/B Thru	2.0	3200	551	730	0	0	0	0	551	730	0.192	0.238		
S/B Right	0.0	0	62	30	0	0	0	0	62	30	0.000	0.000		
E/B Left	1.0	1600	54	44	0	0	0	0	54	44	0.034	0.028	0.034	
E/B Thru	2.0	3200	296	993	0	0	0	0	296	993	0.110	0.365		0.365
E/B Right	0.0	0	56	176	0	0	0	0	56	176	0.000	0.000		
W/B Left	1.0	1600	146	78	0	0	0	0	146	78	0.091	0.049		0.049
W/B Thru	2.0	3200	615	276	0	0	0	0	615	276	0.225	0.119	0.225	
W/B Right	0.0	0	106	106	0	0	0	0	106	106	0.000	0.000		
	ANALYSIS RESULTS :								Sum Of Critical V/C:				0.541	0.743
									Lost Time:				0.100	0.100
									Total V/C:				0.641	0.843
									Level Of Service:				B	D

ASSUMPTIONS AND METHODOLOGY

Existing Counts Year: 2015
Study Volume Year: 2015
Annual Growth Factor: 0.26 Percent

Lane Capacity
Single Through Lane = 1600 Vehicles Per Hour
Single Turn Lane = 1600 Vehicles Per Hour
Dual Turn Lane = 2880 Vehicles Per Hour

Level Of Service Definition

Total V/C	LOS
Under 0.605	A
0.605 - 0.704	B
0.705 - 0.804	C
0.805 - 0.904	D
0.905 - 1.004	E
Over 1.005	F

Lost time for signal Yellow and All red intervals: 0.10 of V/C Ratio

NOTES:

EVAN BROOKS ASSOCIATES, PASADENA, CALIFORNIA

INTERSECTION CAPACITY UTILIZATION ANALYSIS

Location: Inglewood Avenue and 120th Street **City:** Hawthorne
Project No.: EBA2014-31 **Analyzed By:** MYR **File Name:** 2014-31-03 2

Problem Condition: Future 2020 Traffic Volumes with Ambient Growth
Existing Geometric Configuration

Movement	Available Lanes		Peak Hour Volumes								Movement V/C Per Lane		Critical V/C	
			Existing		Other Proj.		Project		Study Vol.					
	No.	Cap.	AM	PM	AM	PM	AM	PM	AM	PM	AM	PM	AM	PM
N/B Left	1.0	1600	130	49	0	0	0	0	132	50	0.082	0.031		
N/B Thru	2.0	3200	558	533	0	0	0	0	565	540	0.219	0.232	0.219	0.232
N/B Right	0.0	0	135	200	0	0	0	0	137	203	0.000	0.000		
S/B Left	1.0	1600	104	160	0	0	0	0	105	162	0.066	0.101	0.066	0.101
S/B Thru	2.0	3200	551	730	0	0	0	0	558	740	0.194	0.241		
S/B Right	0.0	0	62	30	0	0	0	0	63	30	0.000	0.000		
E/B Left	1.0	1600	54	44	0	0	0	0	55	45	0.034	0.028	0.034	
E/B Thru	2.0	3200	296	993	0	0	0	0	300	1006	0.111	0.370		0.370
E/B Right	0.0	0	56	176	0	0	0	0	57	178	0.000	0.000		
W/B Left	1.0	1600	146	78	0	0	0	0	148	79	0.092	0.049		0.049
W/B Thru	2.0	3200	615	276	0	0	0	0	623	280	0.228	0.121	0.228	
W/B Right	0.0	0	106	106	0	0	0	0	107	107	0.000	0.000		
	ANALYSIS RESULTS :								Sum Of Critical V/C:				0.548	0.753
									Lost Time:				0.100	0.100
									Total V/C:				0.648	0.853
									Level Of Service:				B	D

ASSUMPTIONS AND METHODOLOGY

Existing Counts Year: 2015
Study Volume Year: 2020
Annual Growth Factor: 0.26 Percent

Lane Capacity
Single Through Lane = 1600 Vehicles Per Hour
Single Turn Lane = 1600 Vehicles Per Hour
Dual Turn Lane = 2880 Vehicles Per Hour

Level Of Service Definition

Total V/C	LOS
Under 0.605	A
0.605 - 0.704	B
0.705 - 0.804	C
0.805 - 0.904	D
0.905 - 1.004	E
Over 1.005	F

Lost time for signal Yellow and All red intervals: 0.10 of V/C Ratio

NOTES:

EVAN BROOKS ASSOCIATES, PASADENA, CALIFORNIA

INTERSECTION CAPACITY UTILIZATION ANALYSIS

Location: Inglewood Avenue and 120th Street **City:** Hawthorne
Project No.: EBA2014-31 **Analyzed By:** MYR **File Name:** 2014-31-03 3

Problem Condition: Future 2020 Cumulative Traffic Volumes With Project
Existing Geometric Configuration

Movement	Available Lanes		Peak Hour Volumes								Movement V/C Per Lane		Critical V/C	
			Existing		Other Proj.		Project		Study Vol.					
	No.	Cap.	AM	PM	AM	PM	AM	PM	AM	PM	AM	PM	AM	PM
N/B Left	1.0	1600	130	49	0	0	0	0	132	50	0.082	0.031		
N/B Thru	2.0	3200	558	533	0	0	6	13	571	553	0.230	0.246	0.230	0.246
N/B Right	0.0	0	135	200	0	0	28	32	165	234	0.000	0.000		
S/B Left	1.0	1600	104	160	0	0	28	32	134	194	0.084	0.121	0.084	0.121
S/B Thru	2.0	3200	551	730	0	0	12	11	570	750	0.198	0.244		
S/B Right	0.0	0	62	30	0	0	0	0	63	30	0.000	0.000		
E/B Left	1.0	1600	54	44	0	0	0	0	55	45	0.034	0.028	0.034	
E/B Thru	2.0	3200	296	993	0	0	40	42	340	1048	0.124	0.383		0.383
E/B Right	0.0	0	56	176	0	0	0	0	57	178	0.000	0.000		
W/B Left	1.0	1600	146	78	0	0	0	0	148	79	0.092	0.049		0.049
W/B Thru	2.0	3200	615	276	0	0	19	57	642	337	0.238	0.153	0.238	
W/B Right	0.0	0	106	106	0	0	13	44	121	151	0.000	0.000		
	ANALYSIS RESULTS :								Sum Of Critical V/C:				0.586	0.800
									Lost Time:				0.100	0.100
									Total V/C:				0.686	0.900
									Level Of Service:				B	D

ASSUMPTIONS AND METHODOLOGY

Existing Counts Year: 2015
Study Volume Year: 2020
Annual Growth Factor: 0.26 Percent

Lane Capacity
Single Through Lane = 1600 Vehicles Per Hour
Single Turn Lane = 1600 Vehicles Per Hour
Dual Turn Lane = 2880 Vehicles Per Hour

Level Of Service Definition

Total V/C	LOS
Under 0.605	A
0.605 - 0.704	B
0.705 - 0.804	C
0.805 - 0.904	D
0.905 - 1.004	E
Over 1.005	F

Lost time for signal Yellow and All red intervals: 0.10 of V/C Ratio

NOTES:

EVAN BROOKS ASSOCIATES, PASADENA, CALIFORNIA

INTERSECTION CAPACITY UTILIZATION ANALYSIS

Location: Inglewood Avenue and 120th Street **City:** Hawthorne
Project No.: EBA2014-31 **Analyzed By:** MYR **File Name:** 2014-31-03 5

Problem Condition: Future 2035 Cumulative Traffic Volumes Without Project
Existing Geometric Configuration

Movement	Available Lanes		Peak Hour Volumes								Movement V/C Per Lane		Critical V/C	
			Existing		Other Proj.		Project		Study Vol.					
	No.	Cap.	AM	PM	AM	PM	AM	PM	AM	PM	AM	PM	AM	PM
N/B Left	1.0	1600	130	49	0	0	0	0	155	61	0.097	0.038		
N/B Thru	2.0	3200	558	533	0	0	0	0	665	659	0.258	0.283	0.258	0.283
N/B Right	0.0	0	135	200	0	0	0	0	161	247	0.000	0.000		
S/B Left	1.0	1600	104	160	0	0	0	0	124	198	0.077	0.124	0.077	0.124
S/B Thru	2.0	3200	551	730	0	0	0	0	657	902	0.228	0.294		
S/B Right	0.0	0	62	30	0	0	0	0	74	37	0.000	0.000		
E/B Left	1.0	1600	54	44	0	0	0	0	64	54	0.040	0.034	0.040	
E/B Thru	2.0	3200	296	993	0	0	0	0	353	1227	0.131	0.452		0.452
E/B Right	0.0	0	56	176	0	0	0	0	67	218	0.000	0.000		
W/B Left	1.0	1600	146	78	0	0	0	0	174	96	0.109	0.060		0.060
W/B Thru	2.0	3200	615	276	0	0	0	0	733	341	0.269	0.148	0.269	
W/B Right	0.0	0	106	106	0	0	0	0	126	131	0.000	0.000		
	ANALYSIS RESULTS :								Sum Of Critical V/C:				0.644	0.919
									Lost Time:				0.100	0.100
									Total V/C:				0.744	1.019
									Level Of Service:				C	F

ASSUMPTIONS AND METHODOLOGY

Existing Counts Year: 2015
Study Volume Year: 2020 (2035 for Cumulative)
Annual Growth Factor: 0.26 Percent

Lane Capacity
Single Through Lane = 1600 Vehicles Per Hour
Single Turn Lane = 1600 Vehicles Per Hour
Dual Turn Lane = 2880 Vehicles Per Hour

Level Of Service Definition

Total V/C	LOS
Under 0.605	A
0.605 - 0.704	B
0.705 - 0.804	C
0.805 - 0.904	D
0.905 - 1.004	E
Over 1.005	F

Lost time for signal Yellow and All red intervals: 0.10 of V/C Ratio

NOTES:

EVAN BROOKS ASSOCIATES, PASADENA, CALIFORNIA

INTERSECTION CAPACITY UTILIZATION ANALYSIS

Location: Inglewood Avenue and 120th Street **City:** Hawthorne
Project No.: EBA2014-31 **Analyzed By:** MYR **File Name:** 2014-31-03 4

Problem Condition: Future 2035 Cumulative Traffic Volumes With Project
Existing Geometric Configuration

Movement	Available Lanes		Peak Hour Volumes								Movement V/C Per Lane		Critical V/C	
			Existing		Other Proj.		Project		Study Vol.					
	No.	Cap.	AM	PM	AM	PM	AM	PM	AM	PM	AM	PM	AM	PM
N/B Left	1.0	1600	130	49	0	0	0	0	155	61	0.097	0.038		
N/B Thru	2.0	3200	558	533	0	0	6	13	671	672	0.269	0.297	0.269	0.297
N/B Right	0.0	0	135	200	0	0	28	32	189	279	0.000	0.000		
S/B Left	1.0	1600	104	160	0	0	28	32	152	229	0.095	0.143	0.095	0.143
S/B Thru	2.0	3200	551	730	0	0	12	11	669	913	0.232	0.297		
S/B Right	0.0	0	62	30	0	0	0	0	74	37	0.000	0.000		
E/B Left	1.0	1600	54	44	0	0	0	0	64	54	0.040	0.034	0.040	
E/B Thru	2.0	3200	296	993	0	0	40	42	393	1270	0.144	0.465		0.465
E/B Right	0.0	0	56	176	0	0	0	0	67	218	0.000	0.000		
W/B Left	1.0	1600	146	78	0	0	0	0	174	96	0.109	0.060		0.060
W/B Thru	2.0	3200	615	276	0	0	19	57	752	398	0.279	0.179	0.279	
W/B Right	0.0	0	106	106	0	0	13	44	140	175	0.000	0.000		
	ANALYSIS RESULTS :								Sum Of Critical V/C:				0.683	0.966
									Lost Time:				0.100	0.100
									Total V/C:				0.783	1.066
									Level Of Service:				C	F

ASSUMPTIONS AND METHODOLOGY

Existing Counts Year: 2015
Study Volume Year: 2020 (2035 for Cumulative)
Annual Growth Factor: 0.26 Percent

Lane Capacity
Single Through Lane = 1600 Vehicles Per Hour
Single Turn Lane = 1600 Vehicles Per Hour
Dual Turn Lane = 2880 Vehicles Per Hour

Level Of Service Definition

Total V/C	LOS
Under 0.605	A
0.605 - 0.704	B
0.705 - 0.804	C
0.805 - 0.904	D
0.905 - 1.004	E
Over 1.005	F

Lost time for signal Yellow and All red intervals: 0.10 of V/C Ratio

NOTES:

EVAN BROOKS ASSOCIATES, PASADENA, CALIFORNIA

INTERSECTION CAPACITY UTILIZATION ANALYSIS

Location: Inglewood Avenue and 120th Street **City:** Hawthorne
Project No.: EBA2014-31 **Analyzed By:** MYR **File Name:** 2014-31-03 7

Problem Condition: Future 2035 Cumulative Traffic Volumes With Project
Proposed Geometric Configuration with Mitigation

Movement	Available Lanes		Peak Hour Volumes								Movement V/C Per Lane		Critical V/C	
			Existing		Other Proj.		Project		Study Vol.					
	No.	Cap.	AM	PM	AM	PM	AM	PM	AM	PM	AM	PM	AM	PM
N/B Left	1.0	1600	130	49	0	0	0	0	155	61	0.097	0.038		
N/B Thru	2.0	3200	558	533	0	0	6	13	671	672	0.269	0.297	0.269	0.297
N/B Right	0.0	0	135	200	0	0	28	32	189	279	0.000	0.000		
S/B Left	1.0	1600	104	160	0	0	28	32	152	229	0.095	0.143	0.095	0.143
S/B Thru	2.0	3200	551	730	0	0	12	11	669	913	0.232	0.297		
S/B Right	0.0	0	62	30	0	0	0	0	74	37	0.000	0.000		
E/B Left	1.0	1600	54	44	0	0	0	0	64	54	0.040	0.034	0.040	
E/B Thru	3.0	4800	296	993	0	0	40	42	393	1270	0.082	0.265		0.265
E/B Right	1.0	1600	56	176	0	0	0	0	67	218	0.042	0.098		
W/B Left	1.0	1600	146	78	0	0	0	0	174	96	0.109	0.060		0.060
W/B Thru	2.0	3200	615	276	0	0	19	57	752	398	0.279	0.179	0.279	
W/B Right	0.0	0	106	106	0	0	13	44	140	175	0.000	0.000		
	ANALYSIS RESULTS :								Sum Of Critical V/C:				0.683	0.765
									Lost Time:				0.100	0.100
									Total V/C:				0.783	0.865
									Level Of Service:				C	D

ASSUMPTIONS AND METHODOLOGY

Existing Counts Year: 2015
Study Volume Year: 2020 (2035 for Cumulative)
Annual Growth Factor: 0.26 Percent

Lane Capacity
Single Through Lane = 1600 Vehicles Per Hour
Single Turn Lane = 1600 Vehicles Per Hour
Dual Turn Lane = 2880 Vehicles Per Hour

Level Of Service Definition

Total V/C	LOS
Under 0.605	A
0.605 - 0.704	B
0.705 - 0.804	C
0.805 - 0.904	D
0.905 - 1.004	E
Over 1.005	F

Lost time for signal Yellow and All red intervals: 0.10 of V/C Ratio

NOTES:

EVAN BROOKS ASSOCIATES, PASADENA, CALIFORNIA

INTERSECTION CAPACITY UTILIZATION ANALYSIS

Location: Hawthorne Boulevard and Lennox Boulevard **City:** Hawthorne
Project No.: EBA2014-31 **Analyzed By:** MYR **File Name:** 2014-31-04 1

Problem Condition: Existing 2015 Traffic Conditions (Count Date: 2-18-15)
Existing Geometric Configuration

Movement	Available Lanes		Peak Hour Volumes								Movement V/C Per Lane		Critical V/C	
			Existing		Other Proj.		Project		Study Vol.					
	No.	Cap.	AM	PM	AM	PM	AM	PM	AM	PM	AM	PM	AM	PM
N/B Left	1.0	1600	258	261	0	0	0	0	258	261	0.161	0.163	0.161	0.163
N/B Thru	3.0	4800	1005	1123	0	0	0	0	1005	1123	0.209	0.234		
N/B Right	1.0	1600	76	94	0	0	0	0	76	94	0.048	0.014		
S/B Left	1.0	1600	131	130	0	0	0	0	131	130	0.082	0.081		
S/B Thru	4.0	6400	888	1474	0	0	0	0	888	1474	0.149	0.243	0.149	0.243
S/B Right	0.0	0	64	81	0	0	0	0	64	81	0.000	0.000		
E/B Left	1.0	1600	114	104	0	0	0	0	114	104	0.071	0.065	0.071	
E/B Thru	2.0	3200	376	456	0	0	0	0	376	456	0.168	0.255		0.255
E/B Right	0.0	0	163	361	0	0	0	0	163	361	0.000	0.000		
W/B Left	1.0	1600	161	71	0	0	0	0	161	71	0.101	0.044		0.044
W/B Thru	1.0	1600	361	228	0	0	0	0	361	228	0.226	0.143	0.226	
W/B Right	1.0	1600	124	89	0	0	0	0	124	89	0.078	0.056		
	ANALYSIS RESULTS :								Sum Of Critical V/C:				0.607	0.706
									Lost Time:				0.100	0.100
									Total V/C:				0.707	0.806
									Level Of Service:				C	D

ASSUMPTIONS AND METHODOLOGY

Existing Counts Year: 2015
Study Volume Year: 2015
Annual Growth Factor: 0.26 Percent

Lane Capacity
Single Through Lane = 1600 Vehicles Per Hour
Single Turn Lane = 1600 Vehicles Per Hour
Dual Turn Lane = 2880 Vehicles Per Hour

Level Of Service Definition

Total V/C	LOS
Under 0.605	A
0.605 - 0.704	B
0.705 - 0.804	C
0.805 - 0.904	D
0.905 - 1.004	E
Over 1.005	F

Lost time for signal Yellow and All red intervals: 0.10 of V/C Ratio

NOTES:

EVAN BROOKS ASSOCIATES, PASADENA, CALIFORNIA

INTERSECTION CAPACITY UTILIZATION ANALYSIS

Location: Hawthorne Boulevard and Lennox Boulevard **City:** Hawthorne
Project No.: EBA2014-31 **Analyzed By:** MYR **File Name:** 2014-31-04 2

Problem Condition: Future 2020 Traffic Volumes with Ambient Growth
Existing Geometric Configuration

Movement	Available Lanes		Peak Hour Volumes								Movement V/C Per Lane		Critical V/C	
			Existing		Other Proj.		Project		Study Vol.					
	No.	Cap.	AM	PM	AM	PM	AM	PM	AM	PM	AM	PM	AM	PM
N/B Left	1.0	1600	258	261	0	0	0	0	261	264	0.163	0.165	0.163	0.165
N/B Thru	3.0	4800	1005	1123	0	0	0	0	1018	1138	0.212	0.237		
N/B Right	1.0	1600	76	94	0	0	0	0	77	95	0.048	0.015		
S/B Left	1.0	1600	131	130	0	0	0	0	133	132	0.083	0.082		
S/B Thru	4.0	6400	888	1474	0	0	0	0	900	1493	0.151	0.246	0.151	0.246
S/B Right	0.0	0	64	81	0	0	0	0	65	82	0.000	0.000		
E/B Left	1.0	1600	114	104	0	0	0	0	115	105	0.072	0.066	0.072	
E/B Thru	2.0	3200	376	456	0	0	0	0	381	462	0.171	0.259		0.259
E/B Right	0.0	0	163	361	0	0	0	0	165	366	0.000	0.000		
W/B Left	1.0	1600	161	71	0	0	0	0	163	72	0.102	0.045		0.045
W/B Thru	1.0	1600	361	228	0	0	0	0	366	231	0.229	0.144	0.229	
W/B Right	1.0	1600	124	89	0	0	0	0	126	90	0.079	0.056		
	ANALYSIS RESULTS :								Sum Of Critical V/C:				0.615	0.715
									Lost Time:				0.100	0.100
									Total V/C:				0.715	0.815
									Level Of Service:				C	D

ASSUMPTIONS AND METHODOLOGY

Existing Counts Year: 2015
Study Volume Year: 2020
Annual Growth Factor: 0.26 Percent

Lane Capacity
Single Through Lane = 1600 Vehicles Per Hour
Single Turn Lane = 1600 Vehicles Per Hour
Dual Turn Lane = 2880 Vehicles Per Hour

Level Of Service Definition

Total V/C	LOS
Under 0.605	A
0.605 - 0.704	B
0.705 - 0.804	C
0.805 - 0.904	D
0.905 - 1.004	E
Over 1.005	F

Lost time for signal Yellow and All red intervals: 0.10 of V/C Ratio

NOTES:

EVAN BROOKS ASSOCIATES, PASADENA, CALIFORNIA

INTERSECTION CAPACITY UTILIZATION ANALYSIS

Location: Hawthorne Boulevard and Lennox Boulevard **City:** Hawthorne
Project No.: EBA2014-31 **Analyzed By:** MYR **File Name:** 2014-31-04 3

Problem Condition: Future 2020 Cumulative Traffic Volumes With Project
Existing Geometric Configuration

Movement	Available Lanes		Peak Hour Volumes								Movement V/C Per Lane		Critical V/C	
			Existing		Other Proj.		Project		Study Vol.					
	No.	Cap.	AM	PM	AM	PM	AM	PM	AM	PM	AM	PM	AM	PM
N/B Left	1.0	1600	258	261	0	0	0	0	261	264	0.163	0.165	0.163	0.165
N/B Thru	3.0	4800	1005	1123	0	0	19	57	1037	1195	0.216	0.249		
N/B Right	1.0	1600	76	94	0	0	0	0	77	95	0.048	0.015		
S/B Left	1.0	1600	131	130	0	0	0	0	133	132	0.083	0.082		
S/B Thru	4.0	6400	888	1474	0	0	40	42	940	1536	0.157	0.253	0.157	0.253
S/B Right	0.0	0	64	81	0	0	0	0	65	82	0.000	0.000		
E/B Left	1.0	1600	114	104	0	0	0	0	115	105	0.072	0.066	0.072	
E/B Thru	2.0	3200	376	456	0	0	0	0	381	462	0.171	0.259		0.259
E/B Right	0.0	0	163	361	0	0	0	0	165	366	0.000	0.000		
W/B Left	1.0	1600	161	71	0	0	0	0	163	72	0.102	0.045		0.045
W/B Thru	1.0	1600	361	228	0	0	0	0	366	231	0.229	0.144	0.229	
W/B Right	1.0	1600	124	89	0	0	0	0	126	90	0.079	0.056		
	ANALYSIS RESULTS :								Sum Of Critical V/C:				0.621	0.722
									Lost Time:				0.100	0.100
									Total V/C:				0.721	0.822
									Level Of Service:				C	D

ASSUMPTIONS AND METHODOLOGY

Existing Counts Year: 2015
Study Volume Year: 2020
Annual Growth Factor: 0.26 Percent

Lane Capacity
Single Through Lane = 1600 Vehicles Per Hour
Single Turn Lane = 1600 Vehicles Per Hour
Dual Turn Lane = 2880 Vehicles Per Hour

Level Of Service Definition

Total V/C	LOS
Under 0.605	A
0.605 - 0.704	B
0.705 - 0.804	C
0.805 - 0.904	D
0.905 - 1.004	E
Over 1.005	F

Lost time for signal Yellow and All red intervals: 0.10 of V/C Ratio

NOTES:

EVAN BROOKS ASSOCIATES, PASADENA, CALIFORNIA

INTERSECTION CAPACITY UTILIZATION ANALYSIS

Location: Hawthorne Boulevard and Lennox Boulevard **City:** Hawthorne
Project No.: EBA2014-31 **Analyzed By:** MYR **File Name:** 2014-31-04 5

Problem Condition: Future 2035 Cumulative Traffic Volumes Without Project
Existing Geometric Configuration

Movement	Available Lanes		Peak Hour Volumes								Movement V/C Per Lane		Critical V/C	
			Existing		Other Proj.		Project		Study Vol.					
	No.	Cap.	AM	PM	AM	PM	AM	PM	AM	PM	AM	PM	AM	PM
N/B Left	1.0	1600	258	261	0	0	0	0	308	323	0.192	0.202	0.192	0.202
N/B Thru	3.0	4800	1005	1123	0	0	0	0	1198	1388	0.250	0.289		
N/B Right	1.0	1600	76	94	0	0	0	0	91	116	0.057	0.018		
S/B Left	1.0	1600	131	130	0	0	0	0	156	161	0.098	0.100		
S/B Thru	4.0	6400	888	1474	0	0	0	0	1058	1822	0.177	0.300	0.177	0.300
S/B Right	0.0	0	64	81	0	0	0	0	76	100	0.000	0.000		
E/B Left	1.0	1600	114	104	0	0	0	0	136	129	0.085	0.080	0.085	
E/B Thru	2.0	3200	376	456	0	0	0	0	448	564	0.201	0.316		0.316
E/B Right	0.0	0	163	361	0	0	0	0	194	446	0.000	0.000		
W/B Left	1.0	1600	161	71	0	0	0	0	192	88	0.120	0.055		0.055
W/B Thru	1.0	1600	361	228	0	0	0	0	430	282	0.269	0.176	0.269	
W/B Right	1.0	1600	124	89	0	0	0	0	148	110	0.092	0.069		
	ANALYSIS RESULTS :								Sum Of Critical V/C:				0.723	0.872
									Lost Time:				0.100	0.100
									Total V/C:				0.823	0.972
									Level Of Service:				D	E

ASSUMPTIONS AND METHODOLOGY

Existing Counts Year: 2015
Study Volume Year: 2020 (2035 for Cumulative)
Annual Growth Factor: 0.26 Percent

Lane Capacity
Single Through Lane = 1600 Vehicles Per Hour
Single Turn Lane = 1600 Vehicles Per Hour
Dual Turn Lane = 2880 Vehicles Per Hour

Level Of Service Definition

Total V/C	LOS
Under 0.605	A
0.605 - 0.704	B
0.705 - 0.804	C
0.805 - 0.904	D
0.905 - 1.004	E
Over 1.005	F

Lost time for signal Yellow and All red intervals: 0.10 of V/C Ratio

NOTES:

EVAN BROOKS ASSOCIATES, PASADENA, CALIFORNIA

INTERSECTION CAPACITY UTILIZATION ANALYSIS

Location: Hawthorne Boulevard and Lennox Boulevard **City:** Hawthorne
Project No.: EBA2014-31 **Analyzed By:** MYR **File Name:** 2014-31-04 4

Problem Condition: Future 2035 Cumulative Traffic Volumes With Project
Existing Geometric Configuration

Movement	Available Lanes		Peak Hour Volumes								Movement V/C Per Lane		Critical V/C	
			Existing		Other Proj.		Project		Study Vol.					
	No.	Cap.	AM	PM	AM	PM	AM	PM	AM	PM	AM	PM	AM	PM
N/B Left	1.0	1600	258	261	0	0	0	0	308	323	0.192	0.202	0.192	0.202
N/B Thru	3.0	4800	1005	1123	0	0	19	57	1217	1445	0.254	0.301		
N/B Right	1.0	1600	76	94	0	0	0	0	91	116	0.057	0.018		
S/B Left	1.0	1600	131	130	0	0	0	0	156	161	0.098	0.100		
S/B Thru	4.0	6400	888	1474	0	0	40	42	1099	1864	0.184	0.307	0.184	0.307
S/B Right	0.0	0	64	81	0	0	0	0	76	100	0.000	0.000		
E/B Left	1.0	1600	114	104	0	0	0	0	136	129	0.085	0.080	0.085	
E/B Thru	2.0	3200	376	456	0	0	0	0	448	564	0.201	0.316		0.316
E/B Right	0.0	0	163	361	0	0	0	0	194	446	0.000	0.000		
W/B Left	1.0	1600	161	71	0	0	0	0	192	88	0.120	0.055		0.055
W/B Thru	1.0	1600	361	228	0	0	0	0	430	282	0.269	0.176	0.269	
W/B Right	1.0	1600	124	89	0	0	0	0	148	110	0.092	0.069		
	ANALYSIS RESULTS :								Sum Of Critical V/C:				0.730	0.879
									Lost Time:				0.100	0.100
									Total V/C:				0.830	0.979
									Level Of Service:				D	E

ASSUMPTIONS AND METHODOLOGY

Existing Counts Year: 2015
Study Volume Year: 2020 (2035 for Cumulative)
Annual Growth Factor: 0.26 Percent

Lane Capacity
Single Through Lane = 1600 Vehicles Per Hour
Single Turn Lane = 1600 Vehicles Per Hour
Dual Turn Lane = 2880 Vehicles Per Hour

Level Of Service Definition

Total V/C	LOS
Under 0.605	A
0.605 - 0.704	B
0.705 - 0.804	C
0.805 - 0.904	D
0.905 - 1.004	E
Over 1.005	F

Lost time for signal Yellow and All red intervals: 0.10 of V/C Ratio

NOTES:

EVAN BROOKS ASSOCIATES, PASADENA, CALIFORNIA

INTERSECTION CAPACITY UTILIZATION ANALYSIS

Location: Hawthorne Boulevard and Lennox Boulevard **City:** Hawthorne
Project No.: EBA2014-31 **Analyzed By:** MYR **File Name:** 2014-31-04 7

Problem Condition: Future 2035 Cumulative Traffic Volumes With Project
Proposed Geometric Configuration with Mitigation

Movement	Available Lanes		Peak Hour Volumes								Movement V/C Per Lane		Critical V/C	
			Existing		Other Proj.		Project		Study Vol.					
	No.	Cap.	AM	PM	AM	PM	AM	PM	AM	PM	AM	PM	AM	PM
N/B Left	1.0	1600	258	261	0	0	0	0	308	323	0.192	0.202	0.192	0.202
N/B Thru	3.0	4800	1005	1123	0	0	19	57	1217	1445	0.254	0.301		
N/B Right	1.0	1600	76	94	0	0	0	0	91	116	0.057	0.018		
S/B Left	1.0	1600	131	130	0	0	0	0	156	161	0.098	0.100		
S/B Thru	4.0	6400	888	1474	0	0	40	42	1099	1864	0.184	0.307	0.184	0.307
S/B Right	0.0	0	64	81	0	0	0	0	76	100	0.000	0.000		
E/B Left	1.0	1600	114	104	0	0	0	0	136	129	0.085	0.080	0.085	0.080
E/B Thru	2.0	3200	376	456	0	0	0	0	448	564	0.140	0.176		
E/B Right	1.0	1600	163	361	0	0	0	0	194	446	0.121	0.077		
W/B Left	1.0	1600	161	71	0	0	0	0	192	88	0.120	0.055		
W/B Thru	1.0	1600	361	228	0	0	0	0	430	282	0.269	0.176	0.269	0.176
W/B Right	1.0	1600	124	89	0	0	0	0	148	110	0.092	0.069		
	ANALYSIS RESULTS :								Sum Of Critical V/C:				0.730	0.765
									Lost Time:				0.100	0.100
									Total V/C:				0.830	0.865
									Level Of Service:				D	D

ASSUMPTIONS AND METHODOLOGY

Existing Counts Year: 2015
Study Volume Year: 2020 (2035 for Cumulative)
Annual Growth Factor: 0.26 Percent

Lane Capacity
Single Through Lane = 1600 Vehicles Per Hour
Single Turn Lane = 1600 Vehicles Per Hour
Dual Turn Lane = 2880 Vehicles Per Hour

Level Of Service Definition

Total V/C	LOS
Under 0.605	A
0.605 - 0.704	B
0.705 - 0.804	C
0.805 - 0.904	D
0.905 - 1.004	E
Over 1.005	F

Lost time for signal Yellow and All red intervals: 0.10 of V/C Ratio

NOTES:

EVAN BROOKS ASSOCIATES, PASADENA, CALIFORNIA

INTERSECTION CAPACITY UTILIZATION ANALYSIS

Location: Hawthorne Boulevard and Marine Avenue **City:** Hawthorne
Project No.: EBA2014-31 **Analyzed By:** MYR **File Name:** 2014-31-05 1

Problem Condition: Existing 2015 Traffic Conditions (Count Date: 2-18-15)
Existing Geometric Configuration

Movement	Available Lanes		Peak Hour Volumes								Movement V/C Per Lane		Critical V/C	
			Existing		Other Proj.		Project		Study Vol.					
	No.	Cap.	AM	PM	AM	PM	AM	PM	AM	PM	AM	PM	AM	PM
N/B Left	2.0	2880	255	195	0	0	0	0	255	195	0.089	0.068	0.089	
N/B Thru	3.0	4800	956	1115	0	0	0	0	956	1115	0.218	0.272		0.272
N/B Right	0.0	0	90	189	0	0	0	0	90	189	0.000	0.000		
S/B Left	2.0	2880	130	228	0	0	0	0	130	228	0.045	0.079		0.079
S/B Thru	3.0	4800	823	1248	0	0	0	0	823	1248	0.179	0.276	0.179	
S/B Right	0.0	0	36	75	0	0	0	0	36	75	0.000	0.000		
E/B Left	2.0	2880	128	100	0	0	0	0	128	100	0.044	0.035	0.044	
E/B Thru	2.0	3200	343	697	0	0	0	0	343	697	0.145	0.257		0.257
E/B Right	0.0	0	121	126	0	0	0	0	121	126	0.000	0.000		
W/B Left	1.0	1600	185	176	0	0	0	0	185	176	0.116	0.110		0.110
W/B Thru	2.0	3200	821	479	0	0	0	0	821	479	0.288	0.172	0.288	
W/B Right	0.0	0	101	72	0	0	0	0	101	72	0.000	0.000		
	ANALYSIS RESULTS :								Sum Of Critical V/C:				0.600	0.718
									Lost Time:				0.100	0.100
									Total V/C:				0.700	0.818
									Level Of Service:				B	D

ASSUMPTIONS AND METHODOLOGY

Existing Counts Year: 2015
Study Volume Year: 2015
Annual Growth Factor: 0.26 Percent

Lane Capacity
Single Through Lane = 1600 Vehicles Per Hour
Single Turn Lane = 1600 Vehicles Per Hour
Dual Turn Lane = 2880 Vehicles Per Hour

Level Of Service Definition

Total V/C	LOS
Under 0.605	A
0.605 - 0.704	B
0.705 - 0.804	C
0.805 - 0.904	D
0.905 - 1.004	E
Over 1.005	F

Lost time for signal Yellow and All red intervals: 0.10 of V/C Ratio

NOTES:

EVAN BROOKS ASSOCIATES, PASADENA, CALIFORNIA

INTERSECTION CAPACITY UTILIZATION ANALYSIS

Location: Hawthorne Boulevard and Marine Avenue **City:** Hawthorne
Project No.: EBA2014-31 **Analyzed By:** MYR **File Name:** 2014-31-05 2

Problem Condition: Future 2020 Traffic Volumes with Ambient Growth
Existing Geometric Configuration

Movement	Available Lanes		Peak Hour Volumes								Movement V/C Per Lane		Critical V/C	
			Existing		Other Proj.		Project		Study Vol.					
	No.	Cap.	AM	PM	AM	PM	AM	PM	AM	PM	AM	PM	AM	PM
N/B Left	2.0	2880	255	195	0	0	0	0	258	198	0.090	0.069	0.090	
N/B Thru	3.0	4800	956	1115	0	0	0	0	968	1130	0.221	0.275		0.275
N/B Right	0.0	0	90	189	0	0	0	0	91	191	0.000	0.000		
S/B Left	2.0	2880	130	228	0	0	0	0	132	231	0.046	0.080		0.080
S/B Thru	3.0	4800	823	1248	0	0	0	0	834	1264	0.181	0.279	0.181	
S/B Right	0.0	0	36	75	0	0	0	0	36	76	0.000	0.000		
E/B Left	2.0	2880	128	100	0	0	0	0	130	101	0.045	0.035	0.045	
E/B Thru	2.0	3200	343	697	0	0	0	0	347	706	0.147	0.261		0.261
E/B Right	0.0	0	121	126	0	0	0	0	123	128	0.000	0.000		
W/B Left	1.0	1600	185	176	0	0	0	0	187	178	0.117	0.111		0.111
W/B Thru	2.0	3200	821	479	0	0	0	0	832	485	0.292	0.174	0.292	
W/B Right	0.0	0	101	72	0	0	0	0	102	73	0.000	0.000		
	ANALYSIS RESULTS :								Sum Of Critical V/C:				0.608	0.727
									Lost Time:				0.100	0.100
									Total V/C:				0.708	0.827
									Level Of Service:				C	D

ASSUMPTIONS AND METHODOLOGY

Existing Counts Year: 2015
Study Volume Year: 2020
Annual Growth Factor: 0.26 Percent

Lane Capacity
Single Through Lane = 1600 Vehicles Per Hour
Single Turn Lane = 1600 Vehicles Per Hour
Dual Turn Lane = 2880 Vehicles Per Hour

Level Of Service Definition

Total V/C	LOS
Under 0.605	A
0.605 - 0.704	B
0.705 - 0.804	C
0.805 - 0.904	D
0.905 - 1.004	E
Over 1.005	F

Lost time for signal Yellow and All red intervals: 0.10 of V/C Ratio

NOTES:

EVAN BROOKS ASSOCIATES, PASADENA, CALIFORNIA

INTERSECTION CAPACITY UTILIZATION ANALYSIS

Location: Hawthorne Boulevard and Marine Avenue **City:** Hawthorne
Project No.: EBA2014-31 **Analyzed By:** MYR **File Name:** 2014-31-05 3

Problem Condition: Future 2020 Cumulative Traffic Volumes With Project
Existing Geometric Configuration

Movement	Available Lanes		Peak Hour Volumes								Movement V/C Per Lane		Critical V/C	
			Existing		Other Proj.		Project		Study Vol.					
	No.	Cap.	AM	PM	AM	PM	AM	PM	AM	PM	AM	PM	AM	PM
N/B Left	2.0	2880	255	195	0	0	0	0	258	198	0.090	0.069		
N/B Thru	3.0	4800	956	1115	0	0	79	84	1047	1214	0.237	0.293	0.237	0.293
N/B Right	0.0	0	90	189	0	0	0	0	91	191	0.000	0.000		
S/B Left	2.0	2880	130	228	0	0	0	0	132	231	0.046	0.080	0.046	0.080
S/B Thru	3.0	4800	823	1248	0	0	39	115	873	1379	0.189	0.303		
S/B Right	0.0	0	36	75	0	0	0	0	36	76	0.000	0.000		
E/B Left	2.0	2880	128	100	0	0	0	0	130	101	0.045	0.035	0.045	
E/B Thru	2.0	3200	343	697	0	0	0	0	347	706	0.147	0.261		0.261
E/B Right	0.0	0	121	126	0	0	0	0	123	128	0.000	0.000		
W/B Left	1.0	1600	185	176	0	0	0	0	187	178	0.117	0.111		0.111
W/B Thru	2.0	3200	821	479	0	0	0	0	832	485	0.292	0.174	0.292	
W/B Right	0.0	0	101	72	0	0	0	0	102	73	0.000	0.000		
	ANALYSIS RESULTS :								Sum Of Critical V/C:				0.620	0.745
									Lost Time:				0.100	0.100
									Total V/C:				0.720	0.845
									Level Of Service:				C	D

ASSUMPTIONS AND METHODOLOGY

Existing Counts Year: 2015
Study Volume Year: 2020
Annual Growth Factor: 0.26 Percent

Lane Capacity
Single Through Lane = 1600 Vehicles Per Hour
Single Turn Lane = 1600 Vehicles Per Hour
Dual Turn Lane = 2880 Vehicles Per Hour

Level Of Service Definition

Total V/C	LOS
Under 0.605	A
0.605 - 0.704	B
0.705 - 0.804	C
0.805 - 0.904	D
0.905 - 1.004	E
Over 1.005	F

Lost time for signal Yellow and All red intervals: 0.10 of V/C Ratio

NOTES:

EVAN BROOKS ASSOCIATES, PASADENA, CALIFORNIA

INTERSECTION CAPACITY UTILIZATION ANALYSIS

Location: Hawthorne Boulevard and Marine Avenue **City:** Hawthorne
Project No.: EBA2014-31 **Analyzed By:** MYR **File Name:** 2014-31-05 5

Problem Condition: Future 2035 Cumulative Traffic Volumes Without Project
Existing Geometric Configuration

Movement	Available Lanes		Peak Hour Volumes								Movement V/C Per Lane		Critical V/C	
			Existing		Other Proj.		Project		Study Vol.					
	No.	Cap.	AM	PM	AM	PM	AM	PM	AM	PM	AM	PM	AM	PM
N/B Left	2.0	2880	255	195	0	0	0	0	304	241	0.106	0.084	0.106	
N/B Thru	3.0	4800	956	1115	0	0	0	0	1140	1378	0.260	0.336		0.336
N/B Right	0.0	0	90	189	0	0	0	0	107	234	0.000	0.000		
S/B Left	2.0	2880	130	228	0	0	0	0	155	282	0.054	0.098		0.098
S/B Thru	3.0	4800	823	1248	0	0	0	0	981	1543	0.213	0.341	0.213	
S/B Right	0.0	0	36	75	0	0	0	0	43	93	0.000	0.000		
E/B Left	2.0	2880	128	100	0	0	0	0	153	124	0.053	0.043	0.053	
E/B Thru	2.0	3200	343	697	0	0	0	0	409	861	0.173	0.318		0.318
E/B Right	0.0	0	121	126	0	0	0	0	144	156	0.000	0.000		
W/B Left	1.0	1600	185	176	0	0	0	0	221	218	0.138	0.136		0.136
W/B Thru	2.0	3200	821	479	0	0	0	0	979	592	0.343	0.213	0.343	
W/B Right	0.0	0	101	72	0	0	0	0	120	89	0.000	0.000		
	ANALYSIS RESULTS :								Sum Of Critical V/C:				0.715	0.887
									Lost Time:				0.100	0.100
									Total V/C:				0.815	0.987
									Level Of Service:				D	E

ASSUMPTIONS AND METHODOLOGY

Existing Counts Year: 2015
Study Volume Year: 2020 (2035 for Cumulative)
Annual Growth Factor: 0.26 Percent

Lane Capacity
Single Through Lane = 1600 Vehicles Per Hour
Single Turn Lane = 1600 Vehicles Per Hour
Dual Turn Lane = 2880 Vehicles Per Hour

Level Of Service Definition

Total V/C	LOS
Under 0.605	A
0.605 - 0.704	B
0.705 - 0.804	C
0.805 - 0.904	D
0.905 - 1.004	E
Over 1.005	F

Lost time for signal Yellow and All red intervals: 0.10 of V/C Ratio

NOTES:

EVAN BROOKS ASSOCIATES, PASADENA, CALIFORNIA

INTERSECTION CAPACITY UTILIZATION ANALYSIS

Location: Hawthorne Boulevard and Marine Avenue **City:** Hawthorne
Project No.: EBA2014-31 **Analyzed By:** MYR **File Name:** 2014-31-05 4

Problem Condition: Future 2035 Cumulative Traffic Volumes With Project
Existing Geometric Configuration

Movement	Available Lanes		Peak Hour Volumes								Movement V/C Per Lane		Critical V/C	
			Existing		Other Proj.		Project		Study Vol.					
	No.	Cap.	AM	PM	AM	PM	AM	PM	AM	PM	AM	PM	AM	PM
N/B Left	2.0	2880	255	195	0	0	0	0	304	241	0.106	0.084		
N/B Thru	3.0	4800	956	1115	0	0	79	84	1218	1462	0.276	0.353	0.276	0.353
N/B Right	0.0	0	90	189	0	0	0	0	107	234	0.000	0.000		
S/B Left	2.0	2880	130	228	0	0	0	0	155	282	0.054	0.098	0.054	0.098
S/B Thru	3.0	4800	823	1248	0	0	39	115	1020	1657	0.221	0.365		
S/B Right	0.0	0	36	75	0	0	0	0	43	93	0.000	0.000		
E/B Left	2.0	2880	128	100	0	0	0	0	153	124	0.053	0.043	0.053	
E/B Thru	2.0	3200	343	697	0	0	0	0	409	861	0.173	0.318		0.318
E/B Right	0.0	0	121	126	0	0	0	0	144	156	0.000	0.000		
W/B Left	1.0	1600	185	176	0	0	0	0	221	218	0.138	0.136		0.136
W/B Thru	2.0	3200	821	479	0	0	0	0	979	592	0.343	0.213	0.343	
W/B Right	0.0	0	101	72	0	0	0	0	120	89	0.000	0.000		
	ANALYSIS RESULTS :								Sum Of Critical V/C:				0.726	0.905
									Lost Time:				0.100	0.100
									Total V/C:				0.826	1.005
									Level Of Service:				D	E

ASSUMPTIONS AND METHODOLOGY

Existing Counts Year: 2015
Study Volume Year: 2020 (2035 for Cumulative)
Annual Growth Factor: 0.26 Percent

Lane Capacity
Single Through Lane = 1600 Vehicles Per Hour
Single Turn Lane = 1600 Vehicles Per Hour
Dual Turn Lane = 2880 Vehicles Per Hour

Level Of Service Definition

Total V/C	LOS
Under 0.605	A
0.605 - 0.704	B
0.705 - 0.804	C
0.805 - 0.904	D
0.905 - 1.004	E
Over 1.005	F

Lost time for signal Yellow and All red intervals: 0.10 of V/C Ratio

NOTES:

EVAN BROOKS ASSOCIATES, PASADENA, CALIFORNIA

INTERSECTION CAPACITY UTILIZATION ANALYSIS

Location: Hawthorne Boulevard and Marine Avenue **City:** Hawthorne
Project No.: EBA2014-31 **Analyzed By:** MYR **File Name:** 2014-31-05 7

Problem Condition: Future 2035 Cumulative Traffic Volumes With Project
Proposed Geometric Configuration with Mitigation

Movement	Available Lanes		Peak Hour Volumes								Movement V/C Per Lane		Critical V/C	
			Existing		Other Proj.		Project		Study Vol.					
	No.	Cap.	AM	PM	AM	PM	AM	PM	AM	PM	AM	PM	AM	PM
N/B Left	2.0	2880	255	195	0	0	0	0	304	241	0.106	0.084		
N/B Thru	3.0	4800	956	1115	0	0	79	84	1218	1462	0.276	0.353	0.276	0.353
N/B Right	0.0	0	90	189	0	0	0	0	107	234	0.000	0.000		
S/B Left	2.0	2880	130	228	0	0	0	0	155	282	0.054	0.098	0.054	0.098
S/B Thru	3.0	4800	823	1248	0	0	39	115	1020	1657	0.221	0.365		
S/B Right	0.0	0	36	75	0	0	0	0	43	93	0.000	0.000		
E/B Left	2.0	2880	128	100	0	0	0	0	153	124	0.053	0.043	0.053	
E/B Thru	3.0	4800	343	697	0	0	0	0	409	861	0.115	0.212		0.212
E/B Right	0.0	0	121	126	0	0	0	0	144	156	0.000	0.000		
W/B Left	2.0	2880	185	176	0	0	0	0	221	218	0.077	0.076		0.076
W/B Thru	2.0	3200	821	479	0	0	0	0	979	592	0.343	0.213	0.343	
W/B Right	0.0	0	101	72	0	0	0	0	120	89	0.000	0.000		
	ANALYSIS RESULTS :								Sum Of Critical V/C:				0.726	0.739
									Lost Time:				0.100	0.100
									Total V/C:				0.826	0.839
									Level Of Service:				D	D

ASSUMPTIONS AND METHODOLOGY

Existing Counts Year: 2015
Study Volume Year: 2020 (2035 for Cumulative)
Annual Growth Factor: 0.26 Percent

Lane Capacity
Single Through Lane = 1600 Vehicles Per Hour
Single Turn Lane = 1600 Vehicles Per Hour
Dual Turn Lane = 2880 Vehicles Per Hour

Level Of Service Definition

Total V/C	LOS
Under 0.605	A
0.605 - 0.704	B
0.705 - 0.804	C
0.805 - 0.904	D
0.905 - 1.004	E
Over 1.005	F

Lost time for signal Yellow and All red intervals: 0.10 of V/C Ratio

NOTES:

EVAN BROOKS ASSOCIATES, PASADENA, CALIFORNIA

INTERSECTION CAPACITY UTILIZATION ANALYSIS

Location: Hawthorne Boulevard and 139th Street **City:** Hawthorne
Project No.: EBA2014-31 **Analyzed By:** MYR **File Name:** 2014-31-06 1

Problem Condition: Existing 2015 Traffic Conditions (Count Date: 2-19-15)
Existing Geometric Configuration

Movement	Available Lanes		Peak Hour Volumes								Movement V/C Per Lane		Critical V/C	
			Existing		Other Proj.		Project		Study Vol.					
	No.	Cap.	AM	PM	AM	PM	AM	PM	AM	PM	AM	PM	AM	PM
N/B Left	0.0	0	6	2	0	0	0	0	6	2	0.000	0.000		
N/B Thru	3.0	4800	1031	1241	0	0	0	0	1031	1241	0.219	0.265	0.219	0.265
N/B Right	0.0	0	16	29	0	0	0	0	16	29	0.000	0.000		
S/B Left	1.0	1600	63	71	0	0	0	0	63	71	0.039	0.044	0.039	0.044
S/B Thru	3.0	4800	928	1380	0	0	0	0	928	1380	0.193	0.288		
S/B Right	0.0	0	0	0	0	0	0	0	0	0	0.000	0.000		
E/B Left	0.0	0	2	0	0	0	0	0	2	0	0.000	0.000	0.000	0.000
E/B Thru	1.0	1600	0	0	0	0	0	0	0	0	0.001	0.000		
E/B Right	0.0	0	0	0	0	0	0	0	0	0	0.000	0.000		
W/B Left	0.0	0	44	0	0	0	0	0	44	0	0.000	0.000		
W/B Thru	1.0	1600	1	0	0	0	0	0	1	0	0.047	0.001	0.047	0.001
W/B Right	0.0	0	30	1	0	0	0	0	30	1	0.000	0.000		
	ANALYSIS RESULTS :								Sum Of Critical V/C:				0.306	0.310
									Lost Time:				0.100	0.100
									Total V/C:				0.406	0.410
									Level Of Service:				A	A

ASSUMPTIONS AND METHODOLOGY

Existing Counts Year: 2015
Study Volume Year: 2015
Annual Growth Factor: 0.26 Percent

Lane Capacity
Single Through Lane = 1600 Vehicles Per Hour
Single Turn Lane = 1600 Vehicles Per Hour
Dual Turn Lane = 2880 Vehicles Per Hour

Level Of Service Definition

Total V/C	LOS
Under 0.605	A
0.605 - 0.704	B
0.705 - 0.804	C
0.805 - 0.904	D
0.905 - 1.004	E
Over 1.005	F

Lost time for signal Yellow and All red intervals: 0.10 of V/C Ratio

NOTES:

EVAN BROOKS ASSOCIATES, PASADENA, CALIFORNIA

INTERSECTION CAPACITY UTILIZATION ANALYSIS

Location: Hawthorne Boulevard and 139th Street **City:** Hawthorne
Project No.: EBA2014-31 **Analyzed By:** MYR **File Name:** 2014-31-06 2

Problem Condition: Future 2020 Traffic Volumes with Ambient Growth
Existing Geometric Configuration

Movement	Available Lanes		Peak Hour Volumes								Movement V/C Per Lane		Critical V/C	
			Existing		Other Proj.		Project		Study Vol.					
	No.	Cap.	AM	PM	AM	PM	AM	PM	AM	PM	AM	PM	AM	PM
N/B Left	0.0	0	6	2	0	0	0	0	6	2	0.000	0.000		
N/B Thru	3.0	4800	1031	1241	0	0	0	0	1044	1257	0.222	0.268	0.222	0.268
N/B Right	0.0	0	16	29	0	0	0	0	16	29	0.000	0.000		
S/B Left	1.0	1600	63	71	0	0	0	0	64	72	0.040	0.045	0.040	0.045
S/B Thru	3.0	4800	928	1380	0	0	0	0	940	1398	0.196	0.291		
S/B Right	0.0	0	0	0	0	0	0	0	0	0	0.000	0.000		
E/B Left	0.0	0	2	0	0	0	0	0	2	0	0.000	0.000	0.000	0.000
E/B Thru	1.0	1600	0	0	0	0	0	0	0	0	0.001	0.000		
E/B Right	0.0	0	0	0	0	0	0	0	0	0	0.000	0.000		
W/B Left	0.0	0	44	0	0	0	0	0	45	0	0.000	0.000		
W/B Thru	1.0	1600	1	0	0	0	0	0	1	0	0.047	0.001	0.047	0.001
W/B Right	0.0	0	30	1	0	0	0	0	30	1	0.000	0.000		
	ANALYSIS RESULTS :								Sum Of Critical V/C:				0.310	0.314
									Lost Time:				0.100	0.100
									Total V/C:				0.410	0.414
									Level Of Service:				A	A

ASSUMPTIONS AND METHODOLOGY

Existing Counts Year: 2015
Study Volume Year: 2020
Annual Growth Factor: 0.26 Percent

Lane Capacity
Single Through Lane = 1600 Vehicles Per Hour
Single Turn Lane = 1600 Vehicles Per Hour
Dual Turn Lane = 2880 Vehicles Per Hour

Level Of Service Definition

Total V/C	LOS
Under 0.605	A
0.605 - 0.704	B
0.705 - 0.804	C
0.805 - 0.904	D
0.905 - 1.004	E
Over 1.005	F

Lost time for signal Yellow and All red intervals: 0.10 of V/C Ratio

NOTES:

EVAN BROOKS ASSOCIATES, PASADENA, CALIFORNIA

INTERSECTION CAPACITY UTILIZATION ANALYSIS

Location: Hawthorne Boulevard and 139th Street **City:** Hawthorne
Project No.: EBA2014-31 **Analyzed By:** MYR **File Name:** 2014-31-06 3

Problem Condition: Future 2020 Cumulative Traffic Volumes With Project
Existing Geometric Configuration

Movement	Available Lanes		Peak Hour Volumes								Movement V/C Per Lane		Critical V/C	
			Existing		Other Proj.		Project		Study Vol.					
	No.	Cap.	AM	PM	AM	PM	AM	PM	AM	PM	AM	PM	AM	PM
N/B Left	0.0	0	6	2	0	0	0	0	6	2	0.000	0.000		
N/B Thru	3.0	4800	1031	1241	0	0	121	129	1165	1386	0.249	0.298	0.249	0.298
N/B Right	0.0	0	16	29	0	0	10	11	26	40	0.000	0.000		
S/B Left	1.0	1600	63	71	0	0	35	24	99	96	0.062	0.060	0.062	0.060
S/B Thru	3.0	4800	928	1380	0	0	98	308	1039	1706	0.216	0.356		
S/B Right	0.0	0	0	0	0	0	0	0	0	0	0.000	0.000		
E/B Left	0.0	0	2	0	0	0	0	0	2	0	0.000	0.000	0.000	0.000
E/B Thru	1.0	1600	0	0	0	0	0	0	0	0	0.001	0.000		
E/B Right	0.0	0	0	0	0	0	0	0	0	0	0.000	0.000		
W/B Left	0.0	0	44	0	0	0	13	9	57	9	0.000	0.000		
W/B Thru	1.0	1600	1	0	0	0	0	0	1	0	0.064	0.013	0.064	0.013
W/B Right	0.0	0	30	1	0	0	13	12	44	13	0.000	0.000		
	ANALYSIS RESULTS :								Sum Of Critical V/C:				0.375	0.371
									Lost Time:				0.100	0.100
									Total V/C:				0.475	0.471
									Level Of Service:				A	A

ASSUMPTIONS AND METHODOLOGY

Existing Counts Year: 2015
Study Volume Year: 2020
Annual Growth Factor: 0.26 Percent

Lane Capacity
Single Through Lane = 1600 Vehicles Per Hour
Single Turn Lane = 1600 Vehicles Per Hour
Dual Turn Lane = 2880 Vehicles Per Hour

Level Of Service Definition

Total V/C	LOS
Under 0.605	A
0.605 - 0.704	B
0.705 - 0.804	C
0.805 - 0.904	D
0.905 - 1.004	E
Over 1.005	F

Lost time for signal Yellow and All red intervals: 0.10 of V/C Ratio

NOTES:

EVAN BROOKS ASSOCIATES, PASADENA, CALIFORNIA

INTERSECTION CAPACITY UTILIZATION ANALYSIS

Location: Hawthorne Boulevard and 139th Street **City:** Hawthorne
Project No.: EBA2014-31 **Analyzed By:** MYR **File Name:** 2014-31-06 5

Problem Condition: Future 2035 Cumulative Traffic Volumes Without Project
Existing Geometric Configuration

Movement	Available Lanes		Peak Hour Volumes								Movement V/C Per Lane		Critical V/C	
			Existing		Other Proj.		Project		Study Vol.					
	No.	Cap.	AM	PM	AM	PM	AM	PM	AM	PM	AM	PM	AM	PM
N/B Left	0.0	0	6	2	0	0	0	0	7	2	0.000	0.000		
N/B Thru	3.0	4800	1031	1241	0	0	0	0	1229	1534	0.261	0.328	0.261	0.328
N/B Right	0.0	0	16	29	0	0	0	0	19	36	0.000	0.000		
S/B Left	1.0	1600	63	71	0	0	0	0	75	88	0.047	0.055	0.047	0.055
S/B Thru	3.0	4800	928	1380	0	0	0	0	1106	1706	0.230	0.355		
S/B Right	0.0	0	0	0	0	0	0	0	0	0	0.000	0.000		
E/B Left	0.0	0	2	0	0	0	0	0	2	0	0.000	0.000	0.000	0.000
E/B Thru	1.0	1600	0	0	0	0	0	0	0	0	0.001	0.000		
E/B Right	0.0	0	0	0	0	0	0	0	0	0	0.000	0.000		
W/B Left	0.0	0	44	0	0	0	0	0	52	0	0.000	0.000		
W/B Thru	1.0	1600	1	0	0	0	0	0	1	0	0.056	0.001	0.056	0.001
W/B Right	0.0	0	30	1	0	0	0	0	36	1	0.000	0.000		
	ANALYSIS RESULTS :								Sum Of Critical V/C:				0.364	0.383
									Lost Time:				0.100	0.100
									Total V/C:				0.464	0.483
									Level Of Service:				A	A

ASSUMPTIONS AND METHODOLOGY

Existing Counts Year: 2015
Study Volume Year: 2020 (2035 for Cumulative)
Annual Growth Factor: 0.26 Percent

Lane Capacity
Single Through Lane = 1600 Vehicles Per Hour
Single Turn Lane = 1600 Vehicles Per Hour
Dual Turn Lane = 2880 Vehicles Per Hour

Level Of Service Definition

Total V/C	LOS
Under 0.605	A
0.605 - 0.704	B
0.705 - 0.804	C
0.805 - 0.904	D
0.905 - 1.004	E
Over 1.005	F

Lost time for signal Yellow and All red intervals: 0.10 of V/C Ratio

NOTES:

EVAN BROOKS ASSOCIATES, PASADENA, CALIFORNIA

INTERSECTION CAPACITY UTILIZATION ANALYSIS

Location: Hawthorne Boulevard and 139th Street **City:** Hawthorne
Project No.: EBA2014-31 **Analyzed By:** MYR **File Name:** 2014-31-06 4

Problem Condition: Future 2035 Cumulative Traffic Volumes With Project
Existing Geometric Configuration

Movement	Available Lanes		Peak Hour Volumes								Movement V/C Per Lane		Critical V/C	
			Existing		Other Proj.		Project		Study Vol.					
	No.	Cap.	AM	PM	AM	PM	AM	PM	AM	PM	AM	PM	AM	PM
N/B Left	0.0	0	6	2	0	0	0	0	7	2	0.000	0.000		
N/B Thru	3.0	4800	1031	1241	0	0	121	129	1350	1663	0.289	0.357	0.289	0.357
N/B Right	0.0	0	16	29	0	0	10	11	29	47	0.000	0.000		
S/B Left	1.0	1600	63	71	0	0	35	24	110	112	0.069	0.070	0.069	0.070
S/B Thru	3.0	4800	928	1380	0	0	98	308	1205	2014	0.251	0.420		
S/B Right	0.0	0	0	0	0	0	0	0	0	0	0.000	0.000		
E/B Left	0.0	0	2	0	0	0	0	0	2	0	0.000	0.000	0.000	0.000
E/B Thru	1.0	1600	0	0	0	0	0	0	0	0	0.001	0.000		
E/B Right	0.0	0	0	0	0	0	0	0	0	0	0.000	0.000		
W/B Left	0.0	0	44	0	0	0	13	9	65	9	0.000	0.000		
W/B Thru	1.0	1600	1	0	0	0	0	0	1	0	0.072	0.014	0.072	0.014
W/B Right	0.0	0	30	1	0	0	13	12	49	13	0.000	0.000		
	ANALYSIS RESULTS :								Sum Of Critical V/C:				0.430	0.440
									Lost Time:				0.100	0.100
									Total V/C:				0.530	0.540
									Level Of Service:				A	A

ASSUMPTIONS AND METHODOLOGY

Existing Counts Year: 2015
Study Volume Year: 2020 (2035 for Cumulative)
Annual Growth Factor: 0.26 Percent

Lane Capacity
Single Through Lane = 1600 Vehicles Per Hour
Single Turn Lane = 1600 Vehicles Per Hour
Dual Turn Lane = 2880 Vehicles Per Hour

Level Of Service Definition

Total V/C	LOS
Under 0.605	A
0.605 - 0.704	B
0.705 - 0.804	C
0.805 - 0.904	D
0.905 - 1.004	E
Over 1.005	F

Lost time for signal Yellow and All red intervals: 0.10 of V/C Ratio

NOTES:

EVAN BROOKS ASSOCIATES, PASADENA, CALIFORNIA

INTERSECTION CAPACITY UTILIZATION ANALYSIS

Location: Hawthorne Boulevard and Imperial Highway **City:** Hawthorne
Project No.: EBA2014-31 **Analyzed By:** MYR **File Name:** 2014-31-07 1

Problem Condition: Existing 2015 Traffic Conditions (Count Date: 2-18-15)
Existing Geometric Configuration

Movement	Available Lanes		Peak Hour Volumes								Movement V/C Per Lane		Critical V/C	
			Existing		Other Proj.		Project		Study Vol.					
	No.	Cap.	AM	PM	AM	PM	AM	PM	AM	PM	AM	PM	AM	PM
N/B Left	2.0	2880	231	177	0	0	0	0	231	177	0.080	0.061	0.080	0.061
N/B Thru	3.0	4800	589	824	0	0	0	0	589	824	0.123	0.172		
N/B Right	1.0	1600	189	276	0	0	0	0	189	276	0.033	0.124		
S/B Left	1.0	1600	144	195	0	0	0	0	144	195	0.090	0.122		
S/B Thru	3.0	4800	701	1163	0	0	0	0	701	1163	0.192	0.261	0.192	0.261
S/B Right	0.0	0	219	90	0	0	0	0	219	90	0.000	0.000		
E/B Left	1.0	1600	158	129	0	0	0	0	158	129	0.099	0.081	0.099	
E/B Thru	3.0	4800	445	1590	0	0	0	0	445	1590	0.109	0.364		0.364
E/B Right	0.0	0	76	156	0	0	0	0	76	156	0.000	0.000		
W/B Left	1.0	1600	136	77	0	0	0	0	136	77	0.085	0.048		0.048
W/B Thru	3.0	4800	1367	408	0	0	0	0	1367	408	0.311	0.113	0.311	
W/B Right	0.0	0	125	134	0	0	0	0	125	134	0.000	0.000		
	ANALYSIS RESULTS :								Sum Of Critical V/C:				0.681	0.734
									Lost Time:				0.100	0.100
									Total V/C:				0.781	0.834
									Level Of Service:				C	D

ASSUMPTIONS AND METHODOLOGY

Existing Counts Year: 2015
Study Volume Year: 2015
Annual Growth Factor: 0.26 Percent

Lane Capacity
Single Through Lane = 1600 Vehicles Per Hour
Single Turn Lane = 1600 Vehicles Per Hour
Dual Turn Lane = 2880 Vehicles Per Hour

Level Of Service Definition

Total V/C	LOS
Under 0.605	A
0.605 - 0.704	B
0.705 - 0.804	C
0.805 - 0.904	D
0.905 - 1.004	E
Over 1.005	F

Lost time for signal Yellow and All red intervals: 0.10 of V/C Ratio

NOTES:

EVAN BROOKS ASSOCIATES, PASADENA, CALIFORNIA

INTERSECTION CAPACITY UTILIZATION ANALYSIS

Location: Hawthorne Boulevard and Imperial Highway **City:** Hawthorne
Project No.: EBA2014-31 **Analyzed By:** MYR **File Name:** 2014-31-07 2

Problem Condition: Future 2020 Traffic Volumes with Ambient Growth
Existing Geometric Configuration

Movement	Available Lanes		Peak Hour Volumes								Movement V/C Per Lane		Critical V/C	
			Existing		Other Proj.		Project		Study Vol.					
	No.	Cap.	AM	PM	AM	PM	AM	PM	AM	PM	AM	PM	AM	PM
N/B Left	2.0	2880	231	177	0	0	0	0	234	179	0.081	0.062	0.081	0.062
N/B Thru	3.0	4800	589	824	0	0	0	0	597	835	0.124	0.174		
N/B Right	1.0	1600	189	276	0	0	0	0	191	280	0.034	0.126		
S/B Left	1.0	1600	144	195	0	0	0	0	146	198	0.091	0.123		
S/B Thru	3.0	4800	701	1163	0	0	0	0	710	1178	0.194	0.264	0.194	0.264
S/B Right	0.0	0	219	90	0	0	0	0	222	91	0.000	0.000		
E/B Left	1.0	1600	158	129	0	0	0	0	160	131	0.100	0.082	0.100	
E/B Thru	3.0	4800	445	1590	0	0	0	0	451	1611	0.110	0.369		0.369
E/B Right	0.0	0	76	156	0	0	0	0	77	158	0.000	0.000		
W/B Left	1.0	1600	136	77	0	0	0	0	138	78	0.086	0.049		0.049
W/B Thru	3.0	4800	1367	408	0	0	0	0	1385	413	0.315	0.114	0.315	
W/B Right	0.0	0	125	134	0	0	0	0	127	136	0.000	0.000		
	ANALYSIS RESULTS :								Sum Of Critical V/C:				0.690	0.744
									Lost Time:				0.100	0.100
									Total V/C:				0.790	0.844
									Level Of Service:				C	D

ASSUMPTIONS AND METHODOLOGY

Existing Counts Year: 2015
Study Volume Year: 2020
Annual Growth Factor: 0.26 Percent

Lane Capacity
Single Through Lane = 1600 Vehicles Per Hour
Single Turn Lane = 1600 Vehicles Per Hour
Dual Turn Lane = 2880 Vehicles Per Hour

Level Of Service Definition

Total V/C	LOS
Under 0.605	A
0.605 - 0.704	B
0.705 - 0.804	C
0.805 - 0.904	D
0.905 - 1.004	E
Over 1.005	F

Lost time for signal Yellow and All red intervals: 0.10 of V/C Ratio

NOTES:

EVAN BROOKS ASSOCIATES, PASADENA, CALIFORNIA

INTERSECTION CAPACITY UTILIZATION ANALYSIS

Location: Hawthorne Boulevard and Imperial Highway **City:** Hawthorne
Project No.: EBA2014-31 **Analyzed By:** MYR **File Name:** 2014-31-07 3

Problem Condition: Future 2020 Cumulative Traffic Volumes With Project
Existing Geometric Configuration

Movement	Available Lanes		Peak Hour Volumes								Movement V/C Per Lane		Critical V/C	
			Existing		Other Proj.		Project		Study Vol.					
	No.	Cap.	AM	PM	AM	PM	AM	PM	AM	PM	AM	PM	AM	PM
N/B Left	2.0	2880	231	177	0	0	34	88	268	267	0.093	0.093	0.093	0.093
N/B Thru	3.0	4800	589	824	0	0	26	57	623	892	0.130	0.186		
N/B Right	1.0	1600	189	276	0	0	30	88	221	368	0.013	0.143		
S/B Left	1.0	1600	144	195	0	0	0	0	146	198	0.091	0.123		
S/B Thru	3.0	4800	701	1163	0	0	99	105	809	1283	0.215	0.286	0.215	0.286
S/B Right	0.0	0	219	90	0	0	0	0	222	91	0.000	0.000		
E/B Left	1.0	1600	158	129	0	0	0	0	160	131	0.100	0.082	0.100	
E/B Thru	3.0	4800	445	1590	0	0	0	0	451	1611	0.110	0.369		0.369
E/B Right	0.0	0	76	156	0	0	0	0	77	158	0.000	0.000		
W/B Left	1.0	1600	136	77	0	0	62	61	200	139	0.125	0.087		0.087
W/B Thru	3.0	4800	1367	408	0	0	0	0	1385	413	0.315	0.114	0.315	
W/B Right	0.0	0	125	134	0	0	0	0	127	136	0.000	0.000		
	ANALYSIS RESULTS :								Sum Of Critical V/C:				0.723	0.835
									Lost Time:				0.100	0.100
									Total V/C:				0.823	0.935
									Level Of Service:				D	E

ASSUMPTIONS AND METHODOLOGY

Existing Counts Year: 2015
Study Volume Year: 2020
Annual Growth Factor: 0.26 Percent

Lane Capacity
Single Through Lane = 1600 Vehicles Per Hour
Single Turn Lane = 1600 Vehicles Per Hour
Dual Turn Lane = 2880 Vehicles Per Hour

Level Of Service Definition

Total V/C	LOS
Under 0.605	A
0.605 - 0.704	B
0.705 - 0.804	C
0.805 - 0.904	D
0.905 - 1.004	E
Over 1.005	F

Lost time for signal Yellow and All red intervals: 0.10 of V/C Ratio

NOTES:

EVAN BROOKS ASSOCIATES, PASADENA, CALIFORNIA

INTERSECTION CAPACITY UTILIZATION ANALYSIS

Location: Hawthorne Boulevard and Imperial Highway **City:** Hawthorne
Project No.: EBA2014-31 **Analyzed By:** MYR **File Name:** 2014-31-07 5

Problem Condition: Future 2035 Cumulative Traffic Volumes Without Project
Existing Geometric Configuration

Movement	Available Lanes		Peak Hour Volumes								Movement V/C Per Lane		Critical V/C	
			Existing		Other Proj.		Project		Study Vol.					
	No.	Cap.	AM	PM	AM	PM	AM	PM	AM	PM	AM	PM	AM	PM
N/B Left	2.0	2880	231	177	0	0	0	0	275	219	0.096	0.076	0.096	0.076
N/B Thru	3.0	4800	589	824	0	0	0	0	702	1018	0.146	0.212		
N/B Right	1.0	1600	189	276	0	0	0	0	225	341	0.039	0.154		
S/B Left	1.0	1600	144	195	0	0	0	0	172	241	0.107	0.151		
S/B Thru	3.0	4800	701	1163	0	0	0	0	836	1437	0.228	0.323	0.228	0.323
S/B Right	0.0	0	219	90	0	0	0	0	261	111	0.000	0.000		
E/B Left	1.0	1600	158	129	0	0	0	0	188	159	0.118	0.100	0.118	
E/B Thru	3.0	4800	445	1590	0	0	0	0	530	1965	0.129	0.450		0.450
E/B Right	0.0	0	76	156	0	0	0	0	91	193	0.000	0.000		
W/B Left	1.0	1600	136	77	0	0	0	0	162	95	0.101	0.059		0.059
W/B Thru	3.0	4800	1367	408	0	0	0	0	1629	504	0.371	0.140	0.371	
W/B Right	0.0	0	125	134	0	0	0	0	149	166	0.000	0.000		
	ANALYSIS RESULTS :								Sum Of Critical V/C:				0.812	0.908
									Lost Time:				0.100	0.100
									Total V/C:				0.912	1.008
									Level Of Service:				E	F

ASSUMPTIONS AND METHODOLOGY

Existing Counts Year: 2015
Study Volume Year: 2020 (2035 for Cumulative)
Annual Growth Factor: 0.26 Percent

Lane Capacity
Single Through Lane = 1600 Vehicles Per Hour
Single Turn Lane = 1600 Vehicles Per Hour
Dual Turn Lane = 2880 Vehicles Per Hour

Level Of Service Definition

Total V/C	LOS
Under 0.605	A
0.605 - 0.704	B
0.705 - 0.804	C
0.805 - 0.904	D
0.905 - 1.004	E
Over 1.005	F

Lost time for signal Yellow and All red intervals: 0.10 of V/C Ratio

NOTES:

EVAN BROOKS ASSOCIATES, PASADENA, CALIFORNIA

INTERSECTION CAPACITY UTILIZATION ANALYSIS

Location: Hawthorne Boulevard and Imperial Highway **City:** Hawthorne
Project No.: EBA2014-31 **Analyzed By:** MYR **File Name:** 2014-31-07 4

Problem Condition: Future 2035 Cumulative Traffic Volumes With Project
Existing Geometric Configuration

Movement	Available Lanes		Peak Hour Volumes								Movement V/C Per Lane		Critical V/C	
			Existing		Other Proj.		Project		Study Vol.					
	No.	Cap.	AM	PM	AM	PM	AM	PM	AM	PM	AM	PM	AM	PM
N/B Left	2.0	2880	231	177	0	0	34	88	309	307	0.107	0.107	0.107	0.107
N/B Thru	3.0	4800	589	824	0	0	26	57	729	1076	0.152	0.224		
N/B Right	1.0	1600	189	276	0	0	30	88	255	429	0.019	0.170		
S/B Left	1.0	1600	144	195	0	0	0	0	172	241	0.107	0.151		
S/B Thru	3.0	4800	701	1163	0	0	99	105	934	1542	0.249	0.345	0.249	0.345
S/B Right	0.0	0	219	90	0	0	0	0	261	111	0.000	0.000		
E/B Left	1.0	1600	158	129	0	0	0	0	188	159	0.118	0.100	0.118	
E/B Thru	3.0	4800	445	1590	0	0	0	0	530	1965	0.129	0.450		0.450
E/B Right	0.0	0	76	156	0	0	0	0	91	193	0.000	0.000		
W/B Left	1.0	1600	136	77	0	0	62	61	224	157	0.140	0.098		0.098
W/B Thru	3.0	4800	1367	408	0	0	0	0	1629	504	0.371	0.140	0.371	
W/B Right	0.0	0	125	134	0	0	0	0	149	166	0.000	0.000		
	ANALYSIS RESULTS :								Sum Of Critical V/C:				0.845	0.999
									Lost Time:				0.100	0.100
									Total V/C:				0.945	1.099
									Level Of Service:				E	F

ASSUMPTIONS AND METHODOLOGY

Existing Counts Year: 2015
Study Volume Year: 2020 (2035 for Cumulative)
Annual Growth Factor: 0.26 Percent

Lane Capacity
Single Through Lane = 1600 Vehicles Per Hour
Single Turn Lane = 1600 Vehicles Per Hour
Dual Turn Lane = 2880 Vehicles Per Hour

Level Of Service Definition

Total V/C	LOS
Under 0.605	A
0.605 - 0.704	B
0.705 - 0.804	C
0.805 - 0.904	D
0.905 - 1.004	E
Over 1.005	F

Lost time for signal Yellow and All red intervals: 0.10 of V/C Ratio

NOTES:

EVAN BROOKS ASSOCIATES, PASADENA, CALIFORNIA

INTERSECTION CAPACITY UTILIZATION ANALYSIS

Location: Hawthorne Boulevard and Imperial Highway **City:** Hawthorne
Project No.: EBA2014-31 **Analyzed By:** MYR **File Name:** 2014-31-07 3

Problem Condition: Future 2020 Cumulative Traffic Volumes With Project
Proposed Geometric Configuration with Mitigation

Movement	Available Lanes		Peak Hour Volumes								Movement V/C Per Lane		Critical V/C	
			Existing		Other Proj.		Project		Study Vol.					
	No.	Cap.	AM	PM	AM	PM	AM	PM	AM	PM	AM	PM	AM	PM
N/B Left	2.0	2880	231	177	0	0	34	88	268	267	0.093	0.093	0.093	0.093
N/B Thru	3.0	4800	589	824	0	0	26	57	623	892	0.130	0.186		
N/B Right	1.0	1600	189	276	0	0	30	88	221	368	0.013	0.143		
S/B Left	1.0	1600	144	195	0	0	0	0	146	198	0.091	0.123		
S/B Thru	3.0	4800	701	1163	0	0	99	105	809	1283	0.215	0.286	0.215	0.286
S/B Right	0.0	0	219	90	0	0	0	0	222	91	0.000	0.000		
E/B Left	1.0	1600	158	129	0	0	0	0	160	131	0.100	0.082	0.100	
E/B Thru	4.0	6400	445	1590	0	0	0	0	451	1611	0.082	0.276		0.276
E/B Right	0.0	0	76	156	0	0	0	0	77	158	0.000	0.000		
W/B Left	1.0	1600	136	77	0	0	62	61	200	139	0.125	0.087		0.087
W/B Thru	3.0	4800	1367	408	0	0	0	0	1385	413	0.315	0.114	0.315	
W/B Right	0.0	0	125	134	0	0	0	0	127	136	0.000	0.000		
	ANALYSIS RESULTS :								Sum Of Critical V/C:				0.723	0.743
									Lost Time:				0.100	0.100
									Total V/C:				0.823	0.843
									Level Of Service:				D	D

ASSUMPTIONS AND METHODOLOGY

Existing Counts Year: 2015
Study Volume Year: 2020
Annual Growth Factor: 0.26 Percent

Lane Capacity
Single Through Lane = 1600 Vehicles Per Hour
Single Turn Lane = 1600 Vehicles Per Hour
Dual Turn Lane = 2880 Vehicles Per Hour

Level Of Service Definition

Total V/C	LOS
Under 0.605	A
0.605 - 0.704	B
0.705 - 0.804	C
0.805 - 0.904	D
0.905 - 1.004	E
Over 1.005	F

Lost time for signal Yellow and All red intervals: 0.10 of V/C Ratio

NOTES:

EVAN BROOKS ASSOCIATES, PASADENA, CALIFORNIA

INTERSECTION CAPACITY UTILIZATION ANALYSIS

Location: Hawthorne Boulevard and Imperial Highway **City:** Hawthorne
Project No.: EBA2014-31 **Analyzed By:** MYR **File Name:** 2014-31-07 7

Problem Condition: Future 2035 Cumulative Traffic Volumes With Project
Proposed Geometric Configuration with Mitigation

Movement	Available Lanes		Peak Hour Volumes								Movement V/C Per Lane		Critical V/C	
			Existing		Other Proj.		Project		Study Vol.					
	No.	Cap.	AM	PM	AM	PM	AM	PM	AM	PM	AM	PM	AM	PM
N/B Left	2.0	2880	231	177	0	0	34	88	309	307	0.107	0.107	0.107	
N/B Thru	3.0	4800	589	824	0	0	26	57	729	1076	0.152	0.224		0.224
N/B Right	1.0	1600	189	276	0	0	30	88	255	429	0.089	0.219		
S/B Left	1.0	1600	144	195	0	0	0	0	172	241	0.107	0.151		0.151
S/B Thru	4.0	6400	701	1163	0	0	99	105	934	1542	0.187	0.258	0.187	
S/B Right	0.0	0	219	90	0	0	0	0	261	111	0.000	0.000		
E/B Left	1.0	1600	158	129	0	0	0	0	188	159	0.118	0.100	0.118	
E/B Thru	4.0	6400	445	1590	0	0	0	0	530	1965	0.097	0.337		0.337
E/B Right	0.0	0	76	156	0	0	0	0	91	193	0.000	0.000		
W/B Left	2.0	2880	136	77	0	0	62	61	224	157	0.078	0.054		0.054
W/B Thru	3.0	4800	1367	408	0	0	0	0	1629	504	0.371	0.140	0.371	
W/B Right	0.0	0	125	134	0	0	0	0	149	166	0.000	0.000		
	ANALYSIS RESULTS :								Sum Of Critical V/C:				0.782	0.766
									Lost Time:				0.100	0.100
									Total V/C:				0.882	0.866
									Level Of Service:				D	D

ASSUMPTIONS AND METHODOLOGY

Existing Counts Year: 2015
Study Volume Year: 2020 (2035 for Cumulative)
Annual Growth Factor: 0.26 Percent

Lane Capacity
Single Through Lane = 1600 Vehicles Per Hour
Single Turn Lane = 1600 Vehicles Per Hour
Dual Turn Lane = 2880 Vehicles Per Hour

Level Of Service Definition

Total V/C	LOS
Under 0.605	A
0.605 - 0.704	B
0.705 - 0.804	C
0.805 - 0.904	D
0.905 - 1.004	E
Over 1.005	F

Lost time for signal Yellow and All red intervals: 0.10 of V/C Ratio

NOTES:

EVAN BROOKS ASSOCIATES, PASADENA, CALIFORNIA

INTERSECTION CAPACITY UTILIZATION ANALYSIS

Location: Hawthorne Boulevard and Broadway **City:** Hawthorne
Project No.: EBA2014-31 **Analyzed By:** MYR **File Name:** 2014-31-08 1

Problem Condition: Existing 2015 Traffic Conditions (Count Date: 2-18-15)
Existing Geometric Configuration

Movement	Available Lanes		Peak Hour Volumes								Movement V/C Per Lane		Critical V/C	
			Existing		Other Proj.		Project		Study Vol.					
	No.	Cap.	AM	PM	AM	PM	AM	PM	AM	PM	AM	PM	AM	PM
N/B Left	1.0	1600	173	71	0	0	0	0	173	71	0.108	0.044	0.108	0.044
N/B Thru	4.0	6400	995	1043	0	0	0	0	995	1043	0.155	0.163		
N/B Right	0.0	0	0	0	0	0	0	0	0	0	0.000	0.000		
S/B Left	1.0	1600	0	0	0	0	0	0	0	0	0.000	0.000		
S/B Thru	3.0	4800	750	1285	0	0	0	0	750	1285	0.158	0.268	0.158	0.268
S/B Right	0.0	0	9	3	0	0	0	0	9	3	0.000	0.000		
E/B Left	1.0	1600	51	85	0	0	0	0	51	85	0.032	0.053		
E/B Thru	1.0	1600	0	0	0	0	0	0	0	0	0.134	0.067	0.134	0.067
E/B Right	0.0	0	215	107	0	0	0	0	215	107	0.000	0.000		
W/B Left	0.0	0	0	0	0	0	0	0	0	0	0.000	0.000	0.000	0.000
W/B Thru	0.0	0	0	0	0	0	0	0	0	0	0.000	0.000		
W/B Right	0.0	0	0	0	0	0	0	0	0	0	0.000	0.000		
	ANALYSIS RESULTS :								Sum Of Critical V/C:				0.401	0.380
									Lost Time:				0.100	0.100
									Total V/C:				0.501	0.480
									Level Of Service:				A	A

ASSUMPTIONS AND METHODOLOGY

Existing Counts Year: 2015
Study Volume Year: 2015
Annual Growth Factor: 0.26 Percent

Lane Capacity
Single Through Lane = 1600 Vehicles Per Hour
Single Turn Lane = 1600 Vehicles Per Hour
Dual Turn Lane = 2880 Vehicles Per Hour

Level Of Service Definition

Total V/C	LOS
Under 0.605	A
0.605 - 0.704	B
0.705 - 0.804	C
0.805 - 0.904	D
0.905 - 1.004	E
Over 1.005	F

Lost time for signal Yellow and All red intervals: 0.10 of V/C Ratio

NOTES:

EVAN BROOKS ASSOCIATES, PASADENA, CALIFORNIA

INTERSECTION CAPACITY UTILIZATION ANALYSIS

Location: Hawthorne Boulevard and Broadway **City:** Hawthorne
Project No.: EBA2014-31 **Analyzed By:** MYR **File Name:** 2014-31-08 2

Problem Condition: Future 2020 Traffic Volumes with Ambient Growth
Existing Geometric Configuration

Movement	Available Lanes		Peak Hour Volumes								Movement V/C Per Lane		Critical V/C	
			Existing		Other Proj.		Project		Study Vol.					
	No.	Cap.	AM	PM	AM	PM	AM	PM	AM	PM	AM	PM	AM	PM
N/B Left	1.0	1600	173	71	0	0	0	0	175	72	0.110	0.045	0.110	0.045
N/B Thru	4.0	6400	995	1043	0	0	0	0	1008	1057	0.158	0.165		
N/B Right	0.0	0	0	0	0	0	0	0	0	0	0.000	0.000		
S/B Left	1.0	1600	0	0	0	0	0	0	0	0	0.000	0.000		
S/B Thru	3.0	4800	750	1285	0	0	0	0	760	1302	0.160	0.272	0.160	0.272
S/B Right	0.0	0	9	3	0	0	0	0	9	3	0.000	0.000		
E/B Left	1.0	1600	51	85	0	0	0	0	52	86	0.032	0.054		
E/B Thru	1.0	1600	0	0	0	0	0	0	0	0	0.136	0.068	0.136	0.068
E/B Right	0.0	0	215	107	0	0	0	0	218	108	0.000	0.000		
W/B Left	0.0	0	0	0	0	0	0	0	0	0	0.000	0.000	0.000	0.000
W/B Thru	0.0	0	0	0	0	0	0	0	0	0	0.000	0.000		
W/B Right	0.0	0	0	0	0	0	0	0	0	0	0.000	0.000		
	ANALYSIS RESULTS :								Sum Of Critical V/C:				0.406	0.385
									Lost Time:				0.100	0.100
									Total V/C:				0.506	0.485
									Level Of Service:				A	A

ASSUMPTIONS AND METHODOLOGY

Existing Counts Year: 2015
Study Volume Year: 2020
Annual Growth Factor: 0.26 Percent

Lane Capacity
Single Through Lane = 1600 Vehicles Per Hour
Single Turn Lane = 1600 Vehicles Per Hour
Dual Turn Lane = 2880 Vehicles Per Hour

Level Of Service Definition

Total V/C	LOS
Under 0.605	A
0.605 - 0.704	B
0.705 - 0.804	C
0.805 - 0.904	D
0.905 - 1.004	E
Over 1.005	F

Lost time for signal Yellow and All red intervals: 0.10 of V/C Ratio

NOTES:

EVAN BROOKS ASSOCIATES, PASADENA, CALIFORNIA

INTERSECTION CAPACITY UTILIZATION ANALYSIS

Location: Hawthorne Boulevard and Broadway **City:** Hawthorne
Project No.: EBA2014-31 **Analyzed By:** MYR **File Name:** 2014-31-08 3

Problem Condition: Future 2020 Cumulative Traffic Volumes With Project
Existing Geometric Configuration

Movement	Available Lanes		Peak Hour Volumes								Movement V/C Per Lane		Critical V/C	
			Existing		Other Proj.		Project		Study Vol.					
	No.	Cap.	AM	PM	AM	PM	AM	PM	AM	PM	AM	PM	AM	PM
N/B Left	1.0	1600	173	71	0	0	0	0	175	72	0.110	0.045	0.110	0.045
N/B Thru	4.0	6400	995	1043	0	0	21	44	1029	1101	0.174	0.187		
N/B Right	0.0	0	0	0	0	0	84	95	84	95	0.000	0.000		
S/B Left	1.0	1600	0	0	0	0	84	95	84	95	0.053	0.059		
S/B Thru	3.0	4800	750	1285	0	0	96	169	855	1471	0.180	0.307	0.180	0.307
S/B Right	0.0	0	9	3	0	0	0	0	9	3	0.000	0.000		
E/B Left	1.0	1600	51	85	0	0	0	0	52	86	0.032	0.054		
E/B Thru	1.0	1600	0	0	0	0	0	0	0	0	0.136	0.068	0.136	0.068
E/B Right	0.0	0	215	107	0	0	0	0	218	108	0.000	0.000		
W/B Left	0.0	0	0	0	0	0	41	132	41	132	0.000	0.000	0.000	0.000
W/B Thru	0.0	0	0	0	0	0	0	0	0	0	0.000	0.000		
W/B Right	0.0	0	0	0	0	0	41	132	41	132	0.000	0.000		
	ANALYSIS RESULTS :								Sum Of Critical V/C:				0.426	0.420
									Lost Time:				0.100	0.100
									Total V/C:				0.526	0.520
									Level Of Service:				A	A

ASSUMPTIONS AND METHODOLOGY

Existing Counts Year: 2015
Study Volume Year: 2020
Annual Growth Factor: 0.26 Percent

Lane Capacity
Single Through Lane = 1600 Vehicles Per Hour
Single Turn Lane = 1600 Vehicles Per Hour
Dual Turn Lane = 2880 Vehicles Per Hour

Level Of Service Definition

Total V/C	LOS
Under 0.605	A
0.605 - 0.704	B
0.705 - 0.804	C
0.805 - 0.904	D
0.905 - 1.004	E
Over 1.005	F

Lost time for signal Yellow and All red intervals: 0.10 of V/C Ratio

NOTES:

EVAN BROOKS ASSOCIATES, PASADENA, CALIFORNIA

INTERSECTION CAPACITY UTILIZATION ANALYSIS

Location: Hawthorne Boulevard and Broadway **City:** Hawthorne
Project No.: EBA2014-31 **Analyzed By:** MYR **File Name:** 2014-31-08 5

Problem Condition: Future 2035 Cumulative Traffic Volumes Without Project
Existing Geometric Configuration

Movement	Available Lanes		Peak Hour Volumes								Movement V/C Per Lane		Critical V/C	
			Existing		Other Proj.		Project		Study Vol.					
	No.	Cap.	AM	PM	AM	PM	AM	PM	AM	PM	AM	PM	AM	PM
N/B Left	1.0	1600	173	71	0	0	0	0	206	88	0.129	0.055	0.129	0.055
N/B Thru	4.0	6400	995	1043	0	0	0	0	1186	1289	0.185	0.201		
N/B Right	0.0	0	0	0	0	0	0	0	0	0	0.000	0.000		
S/B Left	1.0	1600	0	0	0	0	0	0	0	0	0.000	0.000		
S/B Thru	3.0	4800	750	1285	0	0	0	0	894	1588	0.188	0.332	0.188	0.332
S/B Right	0.0	0	9	3	0	0	0	0	11	4	0.000	0.000		
E/B Left	1.0	1600	51	85	0	0	0	0	61	105	0.038	0.066		
E/B Thru	1.0	1600	0	0	0	0	0	0	0	0	0.160	0.083	0.160	0.083
E/B Right	0.0	0	215	107	0	0	0	0	256	132	0.000	0.000		
W/B Left	0.0	0	0	0	0	0	0	0	0	0	0.000	0.000	0.000	0.000
W/B Thru	0.0	0	0	0	0	0	0	0	0	0	0.000	0.000		
W/B Right	0.0	0	0	0	0	0	0	0	0	0	0.000	0.000		
	ANALYSIS RESULTS :								Sum Of Critical V/C:				0.478	0.469
									Lost Time:				0.100	0.100
									Total V/C:				0.578	0.569
									Level Of Service:				A	A

ASSUMPTIONS AND METHODOLOGY

Existing Counts Year: 2015
Study Volume Year: 2020 (2035 for Cumulative)
Annual Growth Factor: 0.26 Percent

Lane Capacity
Single Through Lane = 1600 Vehicles Per Hour
Single Turn Lane = 1600 Vehicles Per Hour
Dual Turn Lane = 2880 Vehicles Per Hour

Level Of Service Definition

Total V/C	LOS
Under 0.605	A
0.605 - 0.704	B
0.705 - 0.804	C
0.805 - 0.904	D
0.905 - 1.004	E
Over 1.005	F

Lost time for signal Yellow and All red intervals: 0.10 of V/C Ratio

NOTES:

EVAN BROOKS ASSOCIATES, PASADENA, CALIFORNIA

INTERSECTION CAPACITY UTILIZATION ANALYSIS

Location: Hawthorne Boulevard and Broadway **City:** Hawthorne
Project No.: EBA2014-31 **Analyzed By:** MYR **File Name:** 2014-31-08 4

Problem Condition: Future 2035 Cumulative Traffic Volumes With Project
Existing Geometric Configuration

Movement	Available Lanes		Peak Hour Volumes								Movement V/C Per Lane		Critical V/C	
			Existing		Other Proj.		Project		Study Vol.					
	No.	Cap.	AM	PM	AM	PM	AM	PM	AM	PM	AM	PM	AM	PM
N/B Left	1.0	1600	173	71	0	0	0	0	206	88	0.129	0.055	0.129	0.055
N/B Thru	4.0	6400	995	1043	0	0	21	44	1207	1333	0.202	0.223		
N/B Right	0.0	0	0	0	0	0	84	95	84	95	0.000	0.000		
S/B Left	1.0	1600	0	0	0	0	84	95	84	95	0.053	0.059		
S/B Thru	3.0	4800	750	1285	0	0	96	169	990	1757	0.208	0.367	0.208	0.367
S/B Right	0.0	0	9	3	0	0	0	0	11	4	0.000	0.000		
E/B Left	1.0	1600	51	85	0	0	0	0	61	105	0.038	0.066		
E/B Thru	1.0	1600	0	0	0	0	0	0	0	0	0.160	0.083	0.160	0.083
E/B Right	0.0	0	215	107	0	0	0	0	256	132	0.000	0.000		
W/B Left	0.0	0	0	0	0	0	41	132	41	132	0.000	0.000	0.000	0.000
W/B Thru	0.0	0	0	0	0	0	0	0	0	0	0.000	0.000		
W/B Right	0.0	0	0	0	0	0	41	132	41	132	0.000	0.000		
	ANALYSIS RESULTS :								Sum Of Critical V/C:				0.497	0.504
									Lost Time:				0.100	0.100
									Total V/C:				0.597	0.604
									Level Of Service:				A	A

ASSUMPTIONS AND METHODOLOGY

Existing Counts Year: 2015
Study Volume Year: 2020 (2035 for Cumulative)
Annual Growth Factor: 0.26 Percent

Lane Capacity
Single Through Lane = 1600 Vehicles Per Hour
Single Turn Lane = 1600 Vehicles Per Hour
Dual Turn Lane = 2880 Vehicles Per Hour

Level Of Service Definition

Total V/C	LOS
Under 0.605	A
0.605 - 0.704	B
0.705 - 0.804	C
0.805 - 0.904	D
0.905 - 1.004	E
Over 1.005	F

Lost time for signal Yellow and All red intervals: 0.10 of V/C Ratio

NOTES:

EVAN BROOKS ASSOCIATES, PASADENA, CALIFORNIA

INTERSECTION CAPACITY UTILIZATION ANALYSIS

Location: Hawthorne Boulevard and El Segundo Boulevard **City:** Hawthorne
Project No.: EBA2014-31 **Analyzed By:** MYR **File Name:** 2014-31-09 1

Problem Condition: Existing 2015 Traffic Conditions (Count Date: 2-19-15)
Existing Geometric Configuration

Movement	Available Lanes		Peak Hour Volumes								Movement V/C Per Lane		Critical V/C	
			Existing		Other Proj.		Project		Study Vol.					
	No.	Cap.	AM	PM	AM	PM	AM	PM	AM	PM	AM	PM	AM	PM
N/B Left	2.0	2880	252	178	0	0	0	0	252	178	0.088	0.062		
N/B Thru	3.0	4800	853	782	0	0	0	0	853	782	0.206	0.202	0.206	0.202
N/B Right	0.0	0	138	186	0	0	0	0	138	186	0.000	0.000		
S/B Left	2.0	2880	318	333	0	0	0	0	318	333	0.110	0.116	0.110	0.116
S/B Thru	3.0	4800	643	959	0	0	0	0	643	959	0.134	0.200		
S/B Right	1.0	1600	111	110	0	0	0	0	111	110	0.033	0.029		
E/B Left	2.0	2880	116	127	0	0	0	0	116	127	0.040	0.044	0.040	
E/B Thru	3.0	4800	738	1330	0	0	0	0	738	1330	0.179	0.339		0.339
E/B Right	0.0	0	121	295	0	0	0	0	121	295	0.000	0.000		
W/B Left	2.0	2880	147	167	0	0	0	0	147	167	0.051	0.058		0.058
W/B Thru	3.0	4800	1063	587	0	0	0	0	1063	587	0.253	0.152	0.253	
W/B Right	0.0	0	150	143	0	0	0	0	150	143	0.000	0.000		
	ANALYSIS RESULTS :								Sum Of Critical V/C:				0.610	0.714
									Lost Time:				0.100	0.100
									Total V/C:				0.710	0.814
									Level Of Service:				C	D

ASSUMPTIONS AND METHODOLOGY

Existing Counts Year: 2015
Study Volume Year: 2015
Annual Growth Factor: 0.26 Percent

Lane Capacity
Single Through Lane = 1600 Vehicles Per Hour
Single Turn Lane = 1600 Vehicles Per Hour
Dual Turn Lane = 2880 Vehicles Per Hour

Level Of Service Definition

Total V/C	LOS
Under 0.605	A
0.605 - 0.704	B
0.705 - 0.804	C
0.805 - 0.904	D
0.905 - 1.004	E
Over 1.005	F

Lost time for signal Yellow and All red intervals: 0.10 of V/C Ratio

NOTES:

EVAN BROOKS ASSOCIATES, PASADENA, CALIFORNIA

INTERSECTION CAPACITY UTILIZATION ANALYSIS

Location: Hawthorne Boulevard and El Segundo Boulevard **City:** Hawthorne
Project No.: EBA2014-31 **Analyzed By:** MYR **File Name:** 2014-31-09 2

Problem Condition: Future 2020 Traffic Volumes with Ambient Growth
Existing Geometric Configuration

Movement	Available Lanes		Peak Hour Volumes								Movement V/C Per Lane		Critical V/C	
			Existing		Other Proj.		Project		Study Vol.					
	No.	Cap.	AM	PM	AM	PM	AM	PM	AM	PM	AM	PM	AM	PM
N/B Left	2.0	2880	252	178	0	0	0	0	255	180	0.089	0.063		
N/B Thru	3.0	4800	853	782	0	0	0	0	864	792	0.209	0.204	0.209	0.204
N/B Right	0.0	0	138	186	0	0	0	0	140	188	0.000	0.000		
S/B Left	2.0	2880	318	333	0	0	0	0	322	337	0.112	0.117	0.112	0.117
S/B Thru	3.0	4800	643	959	0	0	0	0	651	972	0.136	0.202		
S/B Right	1.0	1600	111	110	0	0	0	0	112	111	0.034	0.029		
E/B Left	2.0	2880	116	127	0	0	0	0	118	129	0.041	0.045	0.041	
E/B Thru	3.0	4800	738	1330	0	0	0	0	748	1347	0.181	0.343		0.343
E/B Right	0.0	0	121	295	0	0	0	0	123	299	0.000	0.000		
W/B Left	2.0	2880	147	167	0	0	0	0	149	169	0.052	0.059		0.059
W/B Thru	3.0	4800	1063	587	0	0	0	0	1077	595	0.256	0.154	0.256	
W/B Right	0.0	0	150	143	0	0	0	0	152	145	0.000	0.000		
	ANALYSIS RESULTS :								Sum Of Critical V/C:				0.618	0.723
									Lost Time:				0.100	0.100
									Total V/C:				0.718	0.823
									Level Of Service:				C	D

ASSUMPTIONS AND METHODOLOGY

Existing Counts Year: 2015
Study Volume Year: 2020
Annual Growth Factor: 0.26 Percent

Lane Capacity
Single Through Lane = 1600 Vehicles Per Hour
Single Turn Lane = 1600 Vehicles Per Hour
Dual Turn Lane = 2880 Vehicles Per Hour

Level Of Service Definition

Total V/C	LOS
Under 0.605	A
0.605 - 0.704	B
0.705 - 0.804	C
0.805 - 0.904	D
0.905 - 1.004	E
Over 1.005	F

Lost time for signal Yellow and All red intervals: 0.10 of V/C Ratio

NOTES:

EVAN BROOKS ASSOCIATES, PASADENA, CALIFORNIA

INTERSECTION CAPACITY UTILIZATION ANALYSIS

Location: Hawthorne Boulevard and El Segundo Boulevard **City:** Hawthorne
Project No.: EBA2014-31 **Analyzed By:** MYR **File Name:** 2014-31-09 3

Problem Condition: Future 2020 Cumulative Traffic Volumes With Project
Existing Geometric Configuration

Movement	Available Lanes		Peak Hour Volumes								Movement V/C Per Lane		Critical V/C	
			Existing		Other Proj.		Project		Study Vol.					
	No.	Cap.	AM	PM	AM	PM	AM	PM	AM	PM	AM	PM	AM	PM
N/B Left	2.0	2880	252	178	0	0	0	9	255	190	0.089	0.066		
N/B Thru	3.0	4800	853	782	0	0	132	141	997	933	0.240	0.235	0.240	0.235
N/B Right	0.0	0	138	186	0	0	13	6	153	194	0.000	0.000		
S/B Left	2.0	2880	318	333	0	0	28	66	350	403	0.122	0.140	0.122	0.140
S/B Thru	3.0	4800	643	959	0	0	98	315	750	1286	0.156	0.268		
S/B Right	1.0	1600	111	110	0	0	71	176	183	287	0.060	0.119		
E/B Left	2.0	2880	116	127	0	0	55	63	173	192	0.060	0.067	0.060	
E/B Thru	3.0	4800	738	1330	0	0	8	23	756	1370	0.186	0.350		0.350
E/B Right	0.0	0	121	295	0	0	13	9	135	308	0.000	0.000		
W/B Left	2.0	2880	147	167	0	0	8	5	156	175	0.054	0.061		0.061
W/B Thru	3.0	4800	1063	587	0	0	19	18	1096	612	0.269	0.168	0.269	
W/B Right	0.0	0	150	143	0	0	42	47	194	192	0.000	0.000		
	ANALYSIS RESULTS :								Sum Of Critical V/C:				0.690	0.785
									Lost Time:				0.100	0.100
									Total V/C:				0.790	0.885
									Level Of Service:				C	D

ASSUMPTIONS AND METHODOLOGY

Existing Counts Year: 2015
Study Volume Year: 2020
Annual Growth Factor: 0.26 Percent

Lane Capacity
Single Through Lane = 1600 Vehicles Per Hour
Single Turn Lane = 1600 Vehicles Per Hour
Dual Turn Lane = 2880 Vehicles Per Hour

Level Of Service Definition

Total V/C	LOS
Under 0.605	A
0.605 - 0.704	B
0.705 - 0.804	C
0.805 - 0.904	D
0.905 - 1.004	E
Over 1.005	F

Lost time for signal Yellow and All red intervals: 0.10 of V/C Ratio

NOTES:

EVAN BROOKS ASSOCIATES, PASADENA, CALIFORNIA

INTERSECTION CAPACITY UTILIZATION ANALYSIS

Location: Hawthorne Boulevard and El Segundo Boulevard **City:** Hawthorne
Project No.: EBA2014-31 **Analyzed By:** MYR **File Name:** 2014-31-09 5

Problem Condition: Future 2035 Cumulative Traffic Volumes Without Project
Existing Geometric Configuration

Movement	Available Lanes		Peak Hour Volumes								Movement V/C Per Lane		Critical V/C	
			Existing		Other Proj.		Project		Study Vol.					
	No.	Cap.	AM	PM	AM	PM	AM	PM	AM	PM	AM	PM	AM	PM
N/B Left	2.0	2880	252	178	0	0	0	0	300	220	0.104	0.076		
N/B Thru	3.0	4800	853	782	0	0	0	0	1017	967	0.246	0.249	0.246	0.249
N/B Right	0.0	0	138	186	0	0	0	0	164	230	0.000	0.000		
S/B Left	2.0	2880	318	333	0	0	0	0	379	412	0.132	0.143	0.132	0.143
S/B Thru	3.0	4800	643	959	0	0	0	0	766	1185	0.160	0.247		
S/B Right	1.0	1600	111	110	0	0	0	0	132	136	0.039	0.036		
E/B Left	2.0	2880	116	127	0	0	0	0	138	157	0.048	0.055	0.048	
E/B Thru	3.0	4800	738	1330	0	0	0	0	880	1644	0.213	0.418		0.418
E/B Right	0.0	0	121	295	0	0	0	0	144	365	0.000	0.000		
W/B Left	2.0	2880	147	167	0	0	0	0	175	206	0.061	0.072		0.072
W/B Thru	3.0	4800	1063	587	0	0	0	0	1267	726	0.301	0.188	0.301	
W/B Right	0.0	0	150	143	0	0	0	0	179	177	0.000	0.000		
	ANALYSIS RESULTS :								Sum Of Critical V/C:				0.727	0.882
									Lost Time:				0.100	0.100
									Total V/C:				0.827	0.982
									Level Of Service:				D	E

ASSUMPTIONS AND METHODOLOGY

Existing Counts Year: 2015
Study Volume Year: 2020 (2035 for Cumulative)
Annual Growth Factor: 0.26 Percent

Lane Capacity
Single Through Lane = 1600 Vehicles Per Hour
Single Turn Lane = 1600 Vehicles Per Hour
Dual Turn Lane = 2880 Vehicles Per Hour

Level Of Service Definition

Total V/C	LOS
Under 0.605	A
0.605 - 0.704	B
0.705 - 0.804	C
0.805 - 0.904	D
0.905 - 1.004	E
Over 1.005	F

Lost time for signal Yellow and All red intervals: 0.10 of V/C Ratio

NOTES:

EVAN BROOKS ASSOCIATES, PASADENA, CALIFORNIA

INTERSECTION CAPACITY UTILIZATION ANALYSIS

Location: Hawthorne Boulevard and El Segundo Boulevard **City:** Hawthorne
Project No.: EBA2014-31 **Analyzed By:** MYR **File Name:** 2014-31-09 4

Problem Condition: Future 2035 Cumulative Traffic Volumes With Project
Existing Geometric Configuration

Movement	Available Lanes		Peak Hour Volumes								Movement V/C Per Lane		Critical V/C	
			Existing		Other Proj.		Project		Study Vol.					
	No.	Cap.	AM	PM	AM	PM	AM	PM	AM	PM	AM	PM	AM	PM
N/B Left	2.0	2880	252	178	0	0	0	9	300	229	0.104	0.080		
N/B Thru	3.0	4800	853	782	0	0	132	141	1149	1107	0.276	0.280	0.276	0.280
N/B Right	0.0	0	138	186	0	0	13	6	178	236	0.000	0.000		
S/B Left	2.0	2880	318	333	0	0	28	66	407	477	0.141	0.166	0.141	0.166
S/B Thru	3.0	4800	643	959	0	0	98	315	865	1500	0.180	0.313		
S/B Right	1.0	1600	111	110	0	0	71	176	203	311	0.066	0.126		
E/B Left	2.0	2880	116	127	0	0	55	63	194	220	0.067	0.077	0.067	
E/B Thru	3.0	4800	738	1330	0	0	8	23	888	1666	0.218	0.425		0.425
E/B Right	0.0	0	121	295	0	0	13	9	157	374	0.000	0.000		
W/B Left	2.0	2880	147	167	0	0	8	5	183	212	0.063	0.074		0.074
W/B Thru	3.0	4800	1063	587	0	0	19	18	1286	743	0.314	0.202	0.314	
W/B Right	0.0	0	150	143	0	0	42	47	221	224	0.000	0.000		
	ANALYSIS RESULTS :								Sum Of Critical V/C:				0.799	0.944
									Lost Time:				0.100	0.100
									Total V/C:				0.899	1.044
									Level Of Service:				D	F

ASSUMPTIONS AND METHODOLOGY

Existing Counts Year: 2015
Study Volume Year: 2020 (2035 for Cumulative)
Annual Growth Factor: 0.26 Percent

Lane Capacity
Single Through Lane = 1600 Vehicles Per Hour
Single Turn Lane = 1600 Vehicles Per Hour
Dual Turn Lane = 2880 Vehicles Per Hour

Level Of Service Definition

Total V/C	LOS
Under 0.605	A
0.605 - 0.704	B
0.705 - 0.804	C
0.805 - 0.904	D
0.905 - 1.004	E
Over 1.005	F

Lost time for signal Yellow and All red intervals: 0.10 of V/C Ratio

NOTES:

EVAN BROOKS ASSOCIATES, PASADENA, CALIFORNIA

INTERSECTION CAPACITY UTILIZATION ANALYSIS

Location: Hawthorne Boulevard and El Segundo Boulevard **City:** Hawthorne
Project No.: EBA2014-31 **Analyzed By:** MYR **File Name:** 2014-31-09 7

Problem Condition: Future 2035 Cumulative Traffic Volumes With Project
Proposed Geomeric Conditions with Mitigation

Movement	Available Lanes		Peak Hour Volumes								Movement V/C Per Lane		Critical V/C	
			Existing		Other Proj.		Project		Study Vol.					
	No.	Cap.	AM	PM	AM	PM	AM	PM	AM	PM	AM	PM	AM	PM
N/B Left	2.0	2880	252	178	0	0	0	9	300	229	0.104	0.080		
N/B Thru	3.0	4800	853	782	0	0	132	141	1149	1107	0.239	0.231	0.239	0.231
N/B Right	1.0	1600	138	186	0	0	13	6	178	236	0.054	0.081		
S/B Left	2.0	2880	318	333	0	0	28	66	407	477	0.141	0.166	0.141	0.166
S/B Thru	3.0	4800	643	959	0	0	98	315	865	1500	0.180	0.313		
S/B Right	1.0	1600	111	110	0	0	71	176	203	311	0.066	0.126		
E/B Left	2.0	2880	116	127	0	0	55	63	194	220	0.067	0.077	0.067	
E/B Thru	4.0	6400	738	1330	0	0	8	23	888	1666	0.139	0.260		0.260
E/B Right	1.0	1600	121	295	0	0	13	9	157	374	0.004	0.162		
W/B Left	2.0	2880	147	167	0	0	8	5	183	212	0.063	0.074		0.074
W/B Thru	3.0	4800	1063	587	0	0	19	18	1286	743	0.314	0.202	0.314	
W/B Right	0.0	0	150	143	0	0	42	47	221	224	0.000	0.000		
	ANALYSIS RESULTS :								Sum Of Critical V/C:				0.762	0.730
									Lost Time:				0.100	0.100
									Total V/C:				0.862	0.830
									Level Of Service:				D	D

ASSUMPTIONS AND METHODOLOGY

Existing Counts Year: 2015
Study Volume Year: 2020 (2035 for Cumulative)
Annual Growth Factor: 0.26 Percent

Lane Capacity
Single Through Lane = 1600 Vehicles Per Hour
Single Turn Lane = 1600 Vehicles Per Hour
Dual Turn Lane = 2880 Vehicles Per Hour

Level Of Service Definition

Total V/C	LOS
Under 0.605	A
0.605 - 0.704	B
0.705 - 0.804	C
0.805 - 0.904	D
0.905 - 1.004	E
Over 1.005	F

Lost time for signal Yellow and All red intervals: 0.10 of V/C Ratio

NOTES:

EVAN BROOKS ASSOCIATES, PASADENA, CALIFORNIA

INTERSECTION CAPACITY UTILIZATION ANALYSIS

Location: Hawthorne Boulevard and Rosecrans Avenue **City:** Hawthorne
Project No.: EBA2014-31 **Analyzed By:** MYR **File Name:** 2014-31-10 1

Problem Condition: Existing 2015 Traffic Conditions (Count Date: 2-19-15)
Existing Geometric Configuration

Movement	Available Lanes		Peak Hour Volumes								Movement V/C Per Lane		Critical V/C	
			Existing		Other Proj.		Project		Study Vol.					
	No.	Cap.	AM	PM	AM	PM	AM	PM	AM	PM	AM	PM	AM	PM
N/B Left	2.0	2880	333	201	0	0	0	0	333	201	0.116	0.070	0.116	
N/B Thru	3.0	4800	682	884	0	0	0	0	682	884	0.142	0.184		0.184
N/B Right	1.0	1600	82	162	0	0	0	0	82	162	0.017	0.054		
S/B Left	2.0	2880	135	349	0	0	0	0	135	349	0.047	0.121		0.121
S/B Thru	3.0	4800	639	1054	0	0	0	0	639	1054	0.133	0.220	0.133	
S/B Right	1.0	1600	180	159	0	0	0	0	180	159	0.083	0.061		
E/B Left	2.0	2880	93	123	0	0	0	0	93	123	0.032	0.043	0.032	
E/B Thru	3.0	4800	460	1126	0	0	0	0	460	1126	0.114	0.269		0.269
E/B Right	0.0	0	85	166	0	0	0	0	85	166	0.000	0.000		
W/B Left	2.0	2880	111	150	0	0	0	0	111	150	0.039	0.052		0.052
W/B Thru	3.0	4800	1060	686	0	0	0	0	1060	686	0.273	0.166	0.273	
W/B Right	0.0	0	249	111	0	0	0	0	249	111	0.000	0.000		
	ANALYSIS RESULTS :								Sum Of Critical V/C:				0.554	0.627
									Lost Time:				0.100	0.100
									Total V/C:				0.654	0.727
									Level Of Service:				B	C

ASSUMPTIONS AND METHODOLOGY

Existing Counts Year: 2015
Study Volume Year: 2015
Annual Growth Factor: 0.26 Percent

Lane Capacity
Single Through Lane = 1600 Vehicles Per Hour
Single Turn Lane = 1600 Vehicles Per Hour
Dual Turn Lane = 2880 Vehicles Per Hour

Level Of Service Definition

Total V/C	LOS
Under 0.605	A
0.605 - 0.704	B
0.705 - 0.804	C
0.805 - 0.904	D
0.905 - 1.004	E
Over 1.005	F

Lost time for signal Yellow and All red intervals: 0.10 of V/C Ratio

NOTES:

EVAN BROOKS ASSOCIATES, PASADENA, CALIFORNIA

INTERSECTION CAPACITY UTILIZATION ANALYSIS

Location: Hawthorne Boulevard and Rosecrans Avenue **City:** Hawthorne
Project No.: EBA2014-31 **Analyzed By:** MYR **File Name:** 2014-31-10 2

Problem Condition: Future 2020 Traffic Volumes with Ambient Growth
Existing Geometric Configuration

Movement	Available Lanes		Peak Hour Volumes								Movement V/C Per Lane		Critical V/C	
			Existing		Other Proj.		Project		Study Vol.					
	No.	Cap.	AM	PM	AM	PM	AM	PM	AM	PM	AM	PM	AM	PM
N/B Left	2.0	2880	333	201	0	0	0	0	337	204	0.117	0.071	0.117	
N/B Thru	3.0	4800	682	884	0	0	0	0	691	896	0.144	0.187		0.187
N/B Right	1.0	1600	82	162	0	0	0	0	83	164	0.017	0.055		
S/B Left	2.0	2880	135	349	0	0	0	0	137	354	0.047	0.123		0.123
S/B Thru	3.0	4800	639	1054	0	0	0	0	647	1068	0.135	0.222	0.135	
S/B Right	1.0	1600	180	159	0	0	0	0	182	161	0.085	0.062		
E/B Left	2.0	2880	93	123	0	0	0	0	94	125	0.033	0.043	0.033	
E/B Thru	3.0	4800	460	1126	0	0	0	0	466	1141	0.115	0.273		0.273
E/B Right	0.0	0	85	166	0	0	0	0	86	168	0.000	0.000		
W/B Left	2.0	2880	111	150	0	0	0	0	112	152	0.039	0.053		0.053
W/B Thru	3.0	4800	1060	686	0	0	0	0	1074	695	0.276	0.168	0.276	
W/B Right	0.0	0	249	111	0	0	0	0	252	112	0.000	0.000		
	ANALYSIS RESULTS :								Sum Of Critical V/C:				0.561	0.635
									Lost Time:				0.100	0.100
									Total V/C:				0.661	0.735
									Level Of Service:				B	C

ASSUMPTIONS AND METHODOLOGY

Existing Counts Year: 2015
Study Volume Year: 2020
Annual Growth Factor: 0.26 Percent

Lane Capacity
Single Through Lane = 1600 Vehicles Per Hour
Single Turn Lane = 1600 Vehicles Per Hour
Dual Turn Lane = 2880 Vehicles Per Hour

Level Of Service Definition

Total V/C	LOS
Under 0.605	A
0.605 - 0.704	B
0.705 - 0.804	C
0.805 - 0.904	D
0.905 - 1.004	E
Over 1.005	F

Lost time for signal Yellow and All red intervals: 0.10 of V/C Ratio

NOTES:

EVAN BROOKS ASSOCIATES, PASADENA, CALIFORNIA

INTERSECTION CAPACITY UTILIZATION ANALYSIS

Location: Hawthorne Boulevard and Rosecrans Avenue **City:** Hawthorne
Project No.: EBA2014-31 **Analyzed By:** MYR **File Name:** 2014-31-10 3

Problem Condition: Future 2020 Cumulative Traffic Volumes With Project
Existing Geometric Configuration

Movement	Available Lanes		Peak Hour Volumes								Movement V/C Per Lane		Critical V/C	
			Existing		Other Proj.		Project		Study Vol.					
	No.	Cap.	AM	PM	AM	PM	AM	PM	AM	PM	AM	PM	AM	PM
N/B Left	2.0	2880	333	201	0	0	0	0	337	204	0.117	0.071	0.117	
N/B Thru	3.0	4800	682	884	0	0	79	84	770	980	0.160	0.204		0.204
N/B Right	1.0	1600	82	162	0	0	0	11	83	175	0.017	0.062		
S/B Left	2.0	2880	135	349	0	0	33	112	170	466	0.059	0.162		0.162
S/B Thru	3.0	4800	639	1054	0	0	95	279	742	1347	0.155	0.281	0.155	
S/B Right	1.0	1600	180	159	0	0	35	92	218	253	0.093	0.105		
E/B Left	2.0	2880	93	123	0	0	43	44	137	169	0.048	0.059	0.048	
E/B Thru	3.0	4800	460	1126	0	0	-1	0	465	1141	0.115	0.273		0.273
E/B Right	0.0	0	85	166	0	0	0	0	86	168	0.000	0.000		
W/B Left	2.0	2880	111	150	0	0	0	0	112	152	0.039	0.053		0.053
W/B Thru	3.0	4800	1060	686	0	0	-1	0	1073	695	0.285	0.177	0.285	
W/B Right	0.0	0	249	111	0	0	40	42	292	155	0.000	0.000		
	ANALYSIS RESULTS :								Sum Of Critical V/C:				0.604	0.691
									Lost Time:				0.100	0.100
									Total V/C:				0.704	0.791
									Level Of Service:				B	C

ASSUMPTIONS AND METHODOLOGY

Existing Counts Year: 2015
Study Volume Year: 2020
Annual Growth Factor: 0.26 Percent

Lane Capacity
Single Through Lane = 1600 Vehicles Per Hour
Single Turn Lane = 1600 Vehicles Per Hour
Dual Turn Lane = 2880 Vehicles Per Hour

Level Of Service Definition

Total V/C	LOS
Under 0.605	A
0.605 - 0.704	B
0.705 - 0.804	C
0.805 - 0.904	D
0.905 - 1.004	E
Over 1.005	F

Lost time for signal Yellow and All red intervals: 0.10 of V/C Ratio

NOTES:

EVAN BROOKS ASSOCIATES, PASADENA, CALIFORNIA

INTERSECTION CAPACITY UTILIZATION ANALYSIS

Location: Hawthorne Boulevard and Rosecrans Avenue **City:** Hawthorne
Project No.: EBA2014-31 **Analyzed By:** MYR **File Name:** 2014-31-10 5

Problem Condition: Future 2035 Cumulative Traffic Volumes Without Project
Existing Geometric Configuration

Movement	Available Lanes		Peak Hour Volumes								Movement V/C Per Lane		Critical V/C	
			Existing		Other Proj.		Project		Study Vol.					
	No.	Cap.	AM	PM	AM	PM	AM	PM	AM	PM	AM	PM	AM	PM
N/B Left	2.0	2880	333	201	0	0	0	0	397	248	0.138	0.086	0.138	
N/B Thru	3.0	4800	682	884	0	0	0	0	813	1093	0.169	0.228		0.228
N/B Right	1.0	1600	82	162	0	0	0	0	98	200	0.020	0.067		
S/B Left	2.0	2880	135	349	0	0	0	0	161	431	0.056	0.150		0.150
S/B Thru	3.0	4800	639	1054	0	0	0	0	762	1303	0.159	0.271	0.159	
S/B Right	1.0	1600	180	159	0	0	0	0	215	197	0.099	0.075		
E/B Left	2.0	2880	93	123	0	0	0	0	111	152	0.038	0.053	0.038	
E/B Thru	3.0	4800	460	1126	0	0	0	0	548	1392	0.135	0.333		0.333
E/B Right	0.0	0	85	166	0	0	0	0	101	205	0.000	0.000		
W/B Left	2.0	2880	111	150	0	0	0	0	132	185	0.046	0.064		0.064
W/B Thru	3.0	4800	1060	686	0	0	0	0	1264	848	0.325	0.205	0.325	
W/B Right	0.0	0	249	111	0	0	0	0	297	137	0.000	0.000		
	ANALYSIS RESULTS :								Sum Of Critical V/C:				0.660	0.774
									Lost Time:				0.100	0.100
									Total V/C:				0.760	0.874
									Level Of Service:				C	D

ASSUMPTIONS AND METHODOLOGY

Existing Counts Year: 2015
Study Volume Year: 2020 (2035 for Cumulative)
Annual Growth Factor: 0.26 Percent

Lane Capacity
Single Through Lane = 1600 Vehicles Per Hour
Single Turn Lane = 1600 Vehicles Per Hour
Dual Turn Lane = 2880 Vehicles Per Hour

Level Of Service Definition

Total V/C	LOS
Under 0.605	A
0.605 - 0.704	B
0.705 - 0.804	C
0.805 - 0.904	D
0.905 - 1.004	E
Over 1.005	F

Lost time for signal Yellow and All red intervals: 0.10 of V/C Ratio

NOTES:

EVAN BROOKS ASSOCIATES, PASADENA, CALIFORNIA

INTERSECTION CAPACITY UTILIZATION ANALYSIS

Location: Hawthorne Boulevard and Rosecrans Avenue **City:** Hawthorne
Project No.: EBA2014-31 **Analyzed By:** MYR **File Name:** 2014-31-10 4

Problem Condition: Future 2035 Cumulative Traffic Volumes With Project
Existing Geometric Configuration

Movement	Available Lanes		Peak Hour Volumes								Movement V/C Per Lane		Critical V/C	
			Existing		Other Proj.		Project		Study Vol.					
	No.	Cap.	AM	PM	AM	PM	AM	PM	AM	PM	AM	PM	AM	PM
N/B Left	2.0	2880	333	201	0	0	0	0	397	248	0.138	0.086	0.138	
N/B Thru	3.0	4800	682	884	0	0	79	84	892	1177	0.186	0.245		0.245
N/B Right	1.0	1600	82	162	0	0	0	11	98	212	0.020	0.074		
S/B Left	2.0	2880	135	349	0	0	33	112	194	544	0.067	0.189		0.189
S/B Thru	3.0	4800	639	1054	0	0	95	279	856	1582	0.178	0.330	0.178	
S/B Right	1.0	1600	180	159	0	0	35	92	250	289	0.108	0.119		
E/B Left	2.0	2880	93	123	0	0	43	44	154	196	0.053	0.068	0.053	
E/B Thru	3.0	4800	460	1126	0	0	-1	0	548	1392	0.135	0.333		0.333
E/B Right	0.0	0	85	166	0	0	0	0	101	205	0.000	0.000		
W/B Left	2.0	2880	111	150	0	0	0	0	132	185	0.046	0.064		0.064
W/B Thru	3.0	4800	1060	686	0	0	-1	0	1263	848	0.333	0.214	0.333	
W/B Right	0.0	0	249	111	0	0	40	42	337	180	0.000	0.000		
	ANALYSIS RESULTS :								Sum Of Critical V/C:				0.703	0.831
									Lost Time:				0.100	0.100
									Total V/C:				0.803	0.931
									Level Of Service:				C	E

ASSUMPTIONS AND METHODOLOGY

Existing Counts Year: 2015
Study Volume Year: 2020 (2035 for Cumulative)
Annual Growth Factor: 0.26 Percent

Lane Capacity
Single Through Lane = 1600 Vehicles Per Hour
Single Turn Lane = 1600 Vehicles Per Hour
Dual Turn Lane = 2880 Vehicles Per Hour

Level Of Service Definition

Total V/C	LOS
Under 0.605	A
0.605 - 0.704	B
0.705 - 0.804	C
0.805 - 0.904	D
0.905 - 1.004	E
Over 1.005	F

Lost time for signal Yellow and All red intervals: 0.10 of V/C Ratio

NOTES:

EVAN BROOKS ASSOCIATES, PASADENA, CALIFORNIA

INTERSECTION CAPACITY UTILIZATION ANALYSIS

Location: Hawthorne Boulevard and Rosecrans Avenue **City:** Hawthorne
Project No.: EBA2014-31 **Analyzed By:** MYR **File Name:** 2014-31-10 7

Problem Condition: Future 2035 Cumulative Traffic Volumes With Project
Proposed Geometric Configuration with Mitigation

Movement	Available Lanes		Peak Hour Volumes								Movement V/C Per Lane		Critical V/C	
			Existing		Other Proj.		Project		Study Vol.					
	No.	Cap.	AM	PM	AM	PM	AM	PM	AM	PM	AM	PM	AM	PM
N/B Left	2.0	2880	333	201	0	0	0	0	397	248	0.138	0.086	0.138	
N/B Thru	3.0	4800	682	884	0	0	79	84	892	1177	0.186	0.245		0.245
N/B Right	1.0	1600	82	162	0	0	0	11	98	212	0.020	0.074		
S/B Left	2.0	2880	135	349	0	0	33	112	194	544	0.067	0.189		0.189
S/B Thru	3.0	4800	639	1054	0	0	95	279	856	1582	0.178	0.330	0.178	
S/B Right	1.0	1600	180	159	0	0	35	92	250	289	0.108	0.119		
E/B Left	2.0	2880	93	123	0	0	43	44	154	196	0.053	0.068	0.053	
E/B Thru	4.0	6400	460	1126	0	0	-1	0	548	1392	0.101	0.250		0.250
E/B Right	0.0	0	85	166	0	0	0	0	101	205	0.000	0.000		
W/B Left	2.0	2880	111	150	0	0	0	0	132	185	0.046	0.064		0.064
W/B Thru	3.0	4800	1060	686	0	0	-1	0	1263	848	0.333	0.214	0.333	
W/B Right	0.0	0	249	111	0	0	40	42	337	180	0.000	0.000		
	ANALYSIS RESULTS :								Sum Of Critical V/C:				0.703	0.748
									Lost Time:				0.100	0.100
									Total V/C:				0.803	0.848
									Level Of Service:				C	D

ASSUMPTIONS AND METHODOLOGY

Existing Counts Year: 2015
Study Volume Year: 2020 (2035 for Cumulative)
Annual Growth Factor: 0.26 Percent

Lane Capacity
Single Through Lane = 1600 Vehicles Per Hour
Single Turn Lane = 1600 Vehicles Per Hour
Dual Turn Lane = 2880 Vehicles Per Hour

Level Of Service Definition

Total V/C	LOS
Under 0.605	A
0.605 - 0.704	B
0.705 - 0.804	C
0.805 - 0.904	D
0.905 - 1.004	E
Over 1.005	F

Lost time for signal Yellow and All red intervals: 0.10 of V/C Ratio

NOTES:

EVAN BROOKS ASSOCIATES, PASADENA, CALIFORNIA

INTERSECTION CAPACITY UTILIZATION ANALYSIS

Location: Inglewood Avenue and Imperial Highway **City:** Hawthorne
Project No.: EBA2014-31 **Analyzed By:** MYR **File Name:** 2014-31-11 1

Problem Condition: Existing 2015 Traffic Conditions (Count Date: 2-18-15)
Existing Geometric Configuration

Movement	Available Lanes		Peak Hour Volumes								Movement V/C Per Lane		Critical V/C	
			Existing		Other Proj.		Project		Study Vol.					
	No.	Cap.	AM	PM	AM	PM	AM	PM	AM	PM	AM	PM	AM	PM
N/B Left	1.0	1600	149	58	0	0	0	0	149	58	0.093	0.036		
N/B Thru	1.0	1600	378	431	0	0	0	0	378	431	0.236	0.269	0.236	0.269
N/B Right	1.0	1600	114	127	0	0	0	0	114	127	0.071	0.028		
S/B Left	1.0	1600	176	137	0	0	0	0	176	137	0.110	0.086	0.110	0.086
S/B Thru	2.0	3200	437	554	0	0	0	0	437	554	0.176	0.186		
S/B Right	0.0	0	126	41	0	0	0	0	126	41	0.000	0.000		
E/B Left	1.0	1600	67	281	0	0	0	0	67	281	0.042	0.176	0.042	
E/B Thru	3.0	4800	334	1722	0	0	0	0	334	1722	0.077	0.378		0.378
E/B Right	0.0	0	34	93	0	0	0	0	34	93	0.000	0.000		
W/B Left	1.0	1600	172	82	0	0	0	0	172	82	0.108	0.051		0.051
W/B Thru	3.0	4800	1403	456	0	0	0	0	1403	456	0.352	0.136	0.352	
W/B Right	0.0	0	286	197	0	0	0	0	286	197	0.000	0.000		
	ANALYSIS RESULTS :								Sum Of Critical V/C:				0.740	0.784
									Lost Time:				0.100	0.100
									Total V/C:				0.840	0.884
									Level Of Service:				D	D

ASSUMPTIONS AND METHODOLOGY

Existing Counts Year: 2015
Study Volume Year: 2015
Annual Growth Factor: 0.26 Percent

Lane Capacity
Single Through Lane = 1600 Vehicles Per Hour
Single Turn Lane = 1600 Vehicles Per Hour
Dual Turn Lane = 2880 Vehicles Per Hour

Level Of Service Definition

Total V/C	LOS
Under 0.605	A
0.605 - 0.704	B
0.705 - 0.804	C
0.805 - 0.904	D
0.905 - 1.004	E
Over 1.005	F

Lost time for signal Yellow and All red intervals: 0.10 of V/C Ratio

NOTES:

EVAN BROOKS ASSOCIATES, PASADENA, CALIFORNIA

INTERSECTION CAPACITY UTILIZATION ANALYSIS

Location: Inglewood Avenue and Imperial Highway **City:** Hawthorne
Project No.: EBA2014-31 **Analyzed By:** MYR **File Name:** 2014-31-11 2

Problem Condition: Future 2020 Traffic Volumes with Ambient Growth
Existing Geometric Configuration

Movement	Available Lanes		Peak Hour Volumes								Movement V/C Per Lane		Critical V/C	
			Existing		Other Proj.		Project		Study Vol.					
	No.	Cap.	AM	PM	AM	PM	AM	PM	AM	PM	AM	PM	AM	PM
N/B Left	1.0	1600	149	58	0	0	0	0	151	59	0.094	0.037		
N/B Thru	1.0	1600	378	431	0	0	0	0	383	437	0.239	0.273	0.239	0.273
N/B Right	1.0	1600	114	127	0	0	0	0	115	129	0.072	0.028		
S/B Left	1.0	1600	176	137	0	0	0	0	178	139	0.111	0.087	0.111	0.087
S/B Thru	2.0	3200	437	554	0	0	0	0	443	561	0.178	0.188		
S/B Right	0.0	0	126	41	0	0	0	0	128	42	0.000	0.000		
E/B Left	1.0	1600	67	281	0	0	0	0	68	285	0.042	0.178	0.042	
E/B Thru	3.0	4800	334	1722	0	0	0	0	338	1745	0.078	0.383		0.383
E/B Right	0.0	0	34	93	0	0	0	0	34	94	0.000	0.000		
W/B Left	1.0	1600	172	82	0	0	0	0	174	83	0.109	0.052		0.052
W/B Thru	3.0	4800	1403	456	0	0	0	0	1421	462	0.356	0.138	0.356	
W/B Right	0.0	0	286	197	0	0	0	0	290	200	0.000	0.000		
	ANALYSIS RESULTS :								Sum Of Critical V/C:				0.750	0.795
									Lost Time:				0.100	0.100
									Total V/C:				0.850	0.895
									Level Of Service:				D	D

ASSUMPTIONS AND METHODOLOGY

Existing Counts Year: 2015
Study Volume Year: 2020
Annual Growth Factor: 0.26 Percent

Lane Capacity
Single Through Lane = 1600 Vehicles Per Hour
Single Turn Lane = 1600 Vehicles Per Hour
Dual Turn Lane = 2880 Vehicles Per Hour

Level Of Service Definition

Total V/C	LOS
Under 0.605	A
0.605 - 0.704	B
0.705 - 0.804	C
0.805 - 0.904	D
0.905 - 1.004	E
Over 1.005	F

Lost time for signal Yellow and All red intervals: 0.10 of V/C Ratio

NOTES:

CROWN CITY ENGINEERS, PASADENA, CALIFORNIA

INTERSECTION CAPACITY UTILIZATION ANALYSIS

Location: Inglewood Avenue and Imperial Highway **City:** Hawthorne
Project No.: EBA2014-31 **Analyzed By:** MYR **File Name:** 2014-31-11 3

Problem Condition: Future 2020 Cumulative Traffic Volumes With Project
Existing Geometric Configuration

Movement	Available Lanes		Peak Hour Volumes								Movement V/C Per Lane		Critical V/C	
			Existing		Other Proj.		Project		Study Vol.					
	No.	Cap.	AM	PM	AM	PM	AM	PM	AM	PM	AM	PM	AM	PM
N/B Left	1.0	1600	149	58	0	0	0	0	151	59	0.094	0.037		
N/B Thru	1.0	1600	378	431	0	0	19	57	402	494	0.251	0.309	0.251	0.309
N/B Right	1.0	1600	114	127	0	0	0	0	115	129	0.072	0.028		
S/B Left	1.0	1600	176	137	0	0	0	0	178	139	0.111	0.087	0.111	0.087
S/B Thru	2.0	3200	437	554	0	0	40	42	483	604	0.191	0.202		
S/B Right	0.0	0	126	41	0	0	0	0	128	42	0.000	0.000		
E/B Left	1.0	1600	67	281	0	0	0	0	68	285	0.042	0.178	0.042	
E/B Thru	3.0	4800	334	1722	0	0	0	0	338	1745	0.078	0.383		0.383
E/B Right	0.0	0	34	93	0	0	0	0	34	94	0.000	0.000		
W/B Left	1.0	1600	172	82	0	0	0	0	174	83	0.109	0.052		0.052
W/B Thru	3.0	4800	1403	456	0	0	0	0	1421	462	0.356	0.138	0.356	
W/B Right	0.0	0	286	197	0	0	0	0	290	200	0.000	0.000		
	ANALYSIS RESULTS :								Sum Of Critical V/C:				0.762	0.830
									Lost Time:				0.100	0.100
									Total V/C:				0.862	0.930
									Level Of Service:				D	E

ASSUMPTIONS AND METHODOLOGY

Existing Counts Year: 2015
Study Volume Year: 2020
Annual Growth Factor: 0.26 Percent

Lane Capacity
Single Through Lane = 1600 Vehicles Per Hour
Single Turn Lane = 1600 Vehicles Per Hour
Dual Turn Lane = 2880 Vehicles Per Hour

Level Of Service Definition

Total V/C	LOS
Under 0.605	A
0.605 - 0.704	B
0.705 - 0.804	C
0.805 - 0.904	D
0.905 - 1.004	E
Over 1.005	F

Lost time for signal Yellow and All red intervals: 0.10 of V/C Ratio

NOTES:

EVAN BROOKS ASSOCIATES, PASADENA, CALIFORNIA

INTERSECTION CAPACITY UTILIZATION ANALYSIS

Location: Inglewood Avenue and Imperial Highway **City:** Hawthorne
Project No.: EBA2014-31 **Analyzed By:** MYR **File Name:** 2014-31-11 5

Problem Condition: Future 2035 Cumulative Traffic Volumes Without Project
Existing Geometric Configuration

Movement	Available Lanes		Peak Hour Volumes								Movement V/C Per Lane		Critical V/C	
			Existing		Other Proj.		Project		Study Vol.					
	No.	Cap.	AM	PM	AM	PM	AM	PM	AM	PM	AM	PM	AM	PM
N/B Left	1.0	1600	149	58	0	0	0	0	178	72	0.111	0.045		
N/B Thru	1.0	1600	378	431	0	0	0	0	451	533	0.282	0.333	0.282	0.333
N/B Right	1.0	1600	114	127	0	0	0	0	136	157	0.085	0.035		
S/B Left	1.0	1600	176	137	0	0	0	0	210	169	0.131	0.106	0.131	0.106
S/B Thru	2.0	3200	437	554	0	0	0	0	521	685	0.210	0.230		
S/B Right	0.0	0	126	41	0	0	0	0	150	51	0.000	0.000		
E/B Left	1.0	1600	67	281	0	0	0	0	80	347	0.050	0.217	0.050	
E/B Thru	3.0	4800	334	1722	0	0	0	0	398	2128	0.091	0.467		0.467
E/B Right	0.0	0	34	93	0	0	0	0	41	115	0.000	0.000		
W/B Left	1.0	1600	172	82	0	0	0	0	205	101	0.128	0.063		0.063
W/B Thru	3.0	4800	1403	456	0	0	0	0	1672	564	0.419	0.168	0.419	
W/B Right	0.0	0	286	197	0	0	0	0	341	243	0.000	0.000		
	ANALYSIS RESULTS :								Sum Of Critical V/C:				0.882	0.969
									Lost Time:				0.100	0.100
									Total V/C:				0.982	1.069
									Level Of Service:				E	F

ASSUMPTIONS AND METHODOLOGY

Existing Counts Year: 2015
Study Volume Year: 2020 (2035 for Cumulative)
Annual Growth Factor: 0.26 Percent

Lane Capacity
Single Through Lane = 1600 Vehicles Per Hour
Single Turn Lane = 1600 Vehicles Per Hour
Dual Turn Lane = 2880 Vehicles Per Hour

Level Of Service Definition

Total V/C	LOS
Under 0.605	A
0.605 - 0.704	B
0.705 - 0.804	C
0.805 - 0.904	D
0.905 - 1.004	E
Over 1.005	F

Lost time for signal Yellow and All red intervals: 0.10 of V/C Ratio

NOTES:

EVAN BROOKS ASSOCIATES, PASADENA, CALIFORNIA

INTERSECTION CAPACITY UTILIZATION ANALYSIS

Location: Inglewood Avenue and Imperial Highway **City:** Hawthorne
Project No.: EBA2014-31 **Analyzed By:** MYR **File Name:** 2014-31-11 4

Problem Condition: Future 2035 Cumulative Traffic Volumes With Project
Existing Geometric Configuration

Movement	Available Lanes		Peak Hour Volumes								Movement V/C Per Lane		Critical V/C	
			Existing		Other Proj.		Project		Study Vol.					
	No.	Cap.	AM	PM	AM	PM	AM	PM	AM	PM	AM	PM	AM	PM
N/B Left	1.0	1600	149	58	0	0	0	0	178	72	0.111	0.045		
N/B Thru	1.0	1600	378	431	0	0	19	57	470	590	0.294	0.369	0.294	0.369
N/B Right	1.0	1600	114	127	0	0	0	0	136	157	0.085	0.035		
S/B Left	1.0	1600	176	137	0	0	0	0	210	169	0.131	0.106	0.131	0.106
S/B Thru	2.0	3200	437	554	0	0	40	42	561	727	0.222	0.243		
S/B Right	0.0	0	126	41	0	0	0	0	150	51	0.000	0.000		
E/B Left	1.0	1600	67	281	0	0	0	0	80	347	0.050	0.217	0.050	
E/B Thru	3.0	4800	334	1722	0	0	0	0	398	2128	0.091	0.467		0.467
E/B Right	0.0	0	34	93	0	0	0	0	41	115	0.000	0.000		
W/B Left	1.0	1600	172	82	0	0	0	0	205	101	0.128	0.063		0.063
W/B Thru	3.0	4800	1403	456	0	0	0	0	1672	564	0.419	0.168	0.419	
W/B Right	0.0	0	286	197	0	0	0	0	341	243	0.000	0.000		
	ANALYSIS RESULTS :								Sum Of Critical V/C:				0.894	1.005
									Lost Time:				0.100	0.100
									Total V/C:				0.994	1.105
									Level Of Service:				E	F

ASSUMPTIONS AND METHODOLOGY

Existing Counts Year: 2015
Study Volume Year: 2020 (2035 for Cumulative)
Annual Growth Factor: 0.26 Percent

Lane Capacity
Single Through Lane = 1600 Vehicles Per Hour
Single Turn Lane = 1600 Vehicles Per Hour
Dual Turn Lane = 2880 Vehicles Per Hour

Level Of Service Definition

Total V/C	LOS
Under 0.605	A
0.605 - 0.704	B
0.705 - 0.804	C
0.805 - 0.904	D
0.905 - 1.004	E
Over 1.005	F

Lost time for signal Yellow and All red intervals: 0.10 of V/C Ratio

NOTES:

EVAN BROOKS ASSOCIATES, PASADENA, CALIFORNIA

INTERSECTION CAPACITY UTILIZATION ANALYSIS

Location: Inglewood Avenue and Imperial Highway **City:** Hawthorne
Project No.: EBA2014-31 **Analyzed By:** MYR **File Name:** 2014-31-11 6

Problem Condition: Future 2020 Cumulative Traffic Volumes With Project
Proposed Geometric Configuration with Mitigation

Movement	Available Lanes		Peak Hour Volumes								Movement V/C Per Lane		Critical V/C	
			Existing		Other Proj.		Project		Study Vol.					
	No.	Cap.	AM	PM	AM	PM	AM	PM	AM	PM	AM	PM	AM	PM
N/B Left	1.0	1600	149	58	0	0	0	0	151	59	0.094	0.037		
N/B Thru	1.0	1600	378	431	0	0	19	57	402	494	0.251	0.309	0.251	0.309
N/B Right	1.0	1600	114	127	0	0	0	0	115	129	0.072	0.028		
S/B Left	1.0	1600	176	137	0	0	0	0	178	139	0.111	0.087	0.111	0.087
S/B Thru	2.0	3200	437	554	0	0	40	42	483	604	0.191	0.202		
S/B Right	0.0	0	126	41	0	0	0	0	128	42	0.000	0.000		
E/B Left	1.0	1600	67	281	0	0	0	0	68	285	0.042	0.178	0.042	
E/B Thru	4.0	6400	334	1722	0	0	0	0	338	1745	0.058	0.287		0.287
E/B Right	0.0	0	34	93	0	0	0	0	34	94	0.000	0.000		
W/B Left	1.0	1600	172	82	0	0	0	0	174	83	0.109	0.052		0.052
W/B Thru	3.0	4800	1403	456	0	0	0	0	1421	462	0.356	0.138	0.356	
W/B Right	0.0	0	286	197	0	0	0	0	290	200	0.000	0.000		
	ANALYSIS RESULTS :								Sum Of Critical V/C:				0.762	0.735
									Lost Time:				0.100	0.100
									Total V/C:				0.862	0.835
									Level Of Service:				D	D

ASSUMPTIONS AND METHODOLOGY

Existing Counts Year: 2015
Study Volume Year: 2020
Annual Growth Factor: 0.26 Percent

Lane Capacity
Single Through Lane = 1600 Vehicles Per Hour
Single Turn Lane = 1600 Vehicles Per Hour
Dual Turn Lane = 2880 Vehicles Per Hour

Level Of Service Definition

Total V/C	LOS
Under 0.605	A
0.605 - 0.704	B
0.705 - 0.804	C
0.805 - 0.904	D
0.905 - 1.004	E
Over 1.005	F

Lost time for signal Yellow and All red intervals: 0.10 of V/C Ratio

NOTES:

EVAN BROOKS ASSOCIATES, PASADENA, CALIFORNIA

INTERSECTION CAPACITY UTILIZATION ANALYSIS

Location: Inglewood Avenue and Imperial Highway **City:** Hawthorne
Project No.: EBA2014-31 **Analyzed By:** MYR **File Name:** 2014-31-11 7

Problem Condition: Future 2035 Cumulative Traffic Volumes With Project
Proposed Geometric Configuration with Mitigation

Movement	Available Lanes		Peak Hour Volumes								Movement V/C Per Lane		Critical V/C	
			Existing		Other Proj.		Project		Study Vol.					
	No.	Cap.	AM	PM	AM	PM	AM	PM	AM	PM	AM	PM	AM	PM
N/B Left	1.0	1600	149	58	0	0	0	0	178	72	0.111	0.045	0.111	
N/B Thru	2.0	3200	378	431	0	0	19	57	470	590	0.147	0.184		0.184
N/B Right	1.0	1600	114	127	0	0	0	0	136	157	0.085	0.035		
S/B Left	1.0	1600	176	137	0	0	0	0	210	169	0.131	0.106		0.106
S/B Thru	2.0	3200	437	554	0	0	40	42	561	727	0.222	0.243	0.222	
S/B Right	0.0	0	126	41	0	0	0	0	150	51	0.000	0.000		
E/B Left	1.0	1600	67	281	0	0	0	0	80	347	0.050	0.217	0.050	
E/B Thru	4.0	6400	334	1722	0	0	0	0	398	2128	0.069	0.351		0.351
E/B Right	0.0	0	34	93	0	0	0	0	41	115	0.000	0.000		
W/B Left	1.0	1600	172	82	0	0	0	0	205	101	0.128	0.063		0.063
W/B Thru	3.0	4800	1403	456	0	0	0	0	1672	564	0.348	0.117	0.348	
W/B Right	1.0	1600	286	197	0	0	0	0	341	243	0.082	0.046		
	ANALYSIS RESULTS :								Sum Of Critical V/C:				0.732	0.704
									Lost Time:				0.100	0.100
									Total V/C:				0.832	0.804
									Level Of Service:				D	C

ASSUMPTIONS AND METHODOLOGY

Existing Counts Year: 2015
Study Volume Year: 2020 (2035 for Cumulative)
Annual Growth Factor: 0.26 Percent

Lane Capacity
Single Through Lane = 1600 Vehicles Per Hour
Single Turn Lane = 1600 Vehicles Per Hour
Dual Turn Lane = 2880 Vehicles Per Hour

Level Of Service Definition

Total V/C	LOS
Under 0.605	A
0.605 - 0.704	B
0.705 - 0.804	C
0.805 - 0.904	D
0.905 - 1.004	E
Over 1.005	F

Lost time for signal Yellow and All red intervals: 0.10 of V/C Ratio

NOTES:

EVAN BROOKS ASSOCIATES, PASADENA, CALIFORNIA

INTERSECTION CAPACITY UTILIZATION ANALYSIS

Location: Inglewood Avenue and El Segundo Boulevard **City:** Hawthorne
Project No.: EBA2014-31 **Analyzed By:** MYR **File Name:** 2014-31-12 1

Problem Condition: Existing 2015 Traffic Conditions (Count Date: 2-19-15)
Existing Geometric Configuration

Movement	Available Lanes		Peak Hour Volumes								Movement V/C Per Lane		Critical V/C	
			Existing		Other Proj.		Project		Study Vol.					
	No.	Cap.	AM	PM	AM	PM	AM	PM	AM	PM	AM	PM	AM	PM
N/B Left	1.0	1600	177	94	0	0	0	0	177	94	0.111	0.059	0.111	0.059
N/B Thru	2.0	3200	813	657	0	0	0	0	813	657	0.282	0.252		
N/B Right	0.0	0	89	149	0	0	0	0	89	149	0.000	0.000		
S/B Left	1.0	1600	102	127	0	0	0	0	102	127	0.064	0.079		
S/B Thru	2.0	3200	649	917	0	0	0	0	649	917	0.243	0.313	0.243	0.313
S/B Right	0.0	0	128	83	0	0	0	0	128	83	0.000	0.000		
E/B Left	1.0	1600	169	236	0	0	0	0	169	236	0.106	0.148	0.106	
E/B Thru	3.0	4800	633	1645	0	0	0	0	633	1645	0.132	0.343		0.343
E/B Right	1.0	1600	102	330	0	0	0	0	102	330	0.064	0.148		
W/B Left	1.0	1600	162	213	0	0	0	0	162	213	0.101	0.133		0.133
W/B Thru	3.0	4800	1032	544	0	0	0	0	1032	544	0.245	0.143	0.245	
W/B Right	0.0	0	146	142	0	0	0	0	146	142	0.000	0.000		
	ANALYSIS RESULTS :								Sum Of Critical V/C:				0.704	0.847
									Lost Time:				0.100	0.100
									Total V/C:				0.804	0.947
									Level Of Service:				C	E

ASSUMPTIONS AND METHODOLOGY

Existing Counts Year: 2015
Study Volume Year: 2015
Annual Growth Factor: 0.26 Percent

Lane Capacity
Single Through Lane = 1600 Vehicles Per Hour
Single Turn Lane = 1600 Vehicles Per Hour
Dual Turn Lane = 2880 Vehicles Per Hour

Level Of Service Definition

Total V/C	LOS
Under 0.605	A
0.605 - 0.704	B
0.705 - 0.804	C
0.805 - 0.904	D
0.905 - 1.004	E
Over 1.005	F

Lost time for signal Yellow and All red intervals: 0.10 of V/C Ratio

NOTES:

EVAN BROOKS ASSOCIATES, PASADENA, CALIFORNIA

INTERSECTION CAPACITY UTILIZATION ANALYSIS

Location: Inglewood Avenue and El Segundo Boulevard **City:** Hawthorne
Project No.: EBA2014-31 **Analyzed By:** MYR **File Name:** 2014-31-12 2

Problem Condition: Future 2020 Traffic Volumes with Ambient Growth
Existing Geometric Configuration

Movement	Available Lanes		Peak Hour Volumes								Movement V/C Per Lane		Critical V/C	
			Existing		Other Proj.		Project		Study Vol.					
	No.	Cap.	AM	PM	AM	PM	AM	PM	AM	PM	AM	PM	AM	PM
N/B Left	1.0	1600	177	94	0	0	0	0	179	95	0.112	0.060	0.112	0.060
N/B Thru	2.0	3200	813	657	0	0	0	0	824	666	0.286	0.255		
N/B Right	0.0	0	89	149	0	0	0	0	90	151	0.000	0.000		
S/B Left	1.0	1600	102	127	0	0	0	0	103	129	0.065	0.080		
S/B Thru	2.0	3200	649	917	0	0	0	0	657	929	0.246	0.317	0.246	0.317
S/B Right	0.0	0	128	83	0	0	0	0	130	84	0.000	0.000		
E/B Left	1.0	1600	169	236	0	0	0	0	171	239	0.107	0.149	0.107	
E/B Thru	3.0	4800	633	1645	0	0	0	0	641	1666	0.134	0.347		0.347
E/B Right	1.0	1600	102	330	0	0	0	0	103	334	0.065	0.149		
W/B Left	1.0	1600	162	213	0	0	0	0	164	216	0.103	0.135		0.135
W/B Thru	3.0	4800	1032	544	0	0	0	0	1045	551	0.249	0.145	0.249	
W/B Right	0.0	0	146	142	0	0	0	0	148	144	0.000	0.000		
	ANALYSIS RESULTS :								Sum Of Critical V/C:				0.714	0.858
									Lost Time:				0.100	0.100
									Total V/C:				0.814	0.958
									Level Of Service:				D	E

ASSUMPTIONS AND METHODOLOGY

Existing Counts Year: 2015
Study Volume Year: 2020
Annual Growth Factor: 0.26 Percent

Lane Capacity
Single Through Lane = 1600 Vehicles Per Hour
Single Turn Lane = 1600 Vehicles Per Hour
Dual Turn Lane = 2880 Vehicles Per Hour

Level Of Service Definition

Total V/C	LOS
Under 0.605	A
0.605 - 0.704	B
0.705 - 0.804	C
0.805 - 0.904	D
0.905 - 1.004	E
Over 1.005	F

Lost time for signal Yellow and All red intervals: 0.10 of V/C Ratio

NOTES:

EVAN BROOKS ASSOCIATES, PASADENA, CALIFORNIA

INTERSECTION CAPACITY UTILIZATION ANALYSIS

Location: Inglewood Avenue and El Segundo Boulevard **City:** Hawthorne
Project No.: EBA2014-31 **Analyzed By:** MYR **File Name:** 2014-31-12 3

Problem Condition: Future 2020 Cumulative Traffic Volumes With Project
Existing Geometric Configuration

Movement	Available Lanes		Peak Hour Volumes								Movement V/C Per Lane		Critical V/C	
			Existing		Other Proj.		Project		Study Vol.					
	No.	Cap.	AM	PM	AM	PM	AM	PM	AM	PM	AM	PM	AM	PM
N/B Left	1.0	1600	177	94	0	0	0	0	179	95	0.112	0.060	0.112	0.060
N/B Thru	2.0	3200	813	657	0	0	28	32	852	697	0.297	0.268		
N/B Right	0.0	0	89	149	0	0	9	9	99	160	0.000	0.000		
S/B Left	1.0	1600	102	127	0	0	12	11	115	139	0.072	0.087		
S/B Thru	2.0	3200	649	917	0	0	56	176	713	1105	0.281	0.426	0.281	0.426
S/B Right	0.0	0	128	83	0	0	56	176	185	260	0.000	0.000		
E/B Left	1.0	1600	169	236	0	0	0	0	171	239	0.107	0.149	0.107	
E/B Thru	3.0	4800	633	1645	0	0	159	168	800	1834	0.167	0.382		0.382
E/B Right	1.0	1600	102	330	0	0	0	0	103	334	0.065	0.149		
W/B Left	1.0	1600	162	213	0	0	4	11	168	227	0.105	0.142		0.142
W/B Thru	3.0	4800	1032	544	0	0	25	45	1071	596	0.255	0.158	0.255	
W/B Right	0.0	0	146	142	0	0	6	18	154	162	0.000	0.000		
	ANALYSIS RESULTS :								Sum Of Critical V/C:				0.755	1.010
									Lost Time:				0.100	0.100
									Total V/C:				0.855	1.110
									Level Of Service:				D	F

ASSUMPTIONS AND METHODOLOGY

Existing Counts Year: 2015
Study Volume Year: 2020
Annual Growth Factor: 0.26 Percent

Lane Capacity
Single Through Lane = 1600 Vehicles Per Hour
Single Turn Lane = 1600 Vehicles Per Hour
Dual Turn Lane = 2880 Vehicles Per Hour

Level Of Service Definition

Total V/C	LOS
Under 0.605	A
0.605 - 0.704	B
0.705 - 0.804	C
0.805 - 0.904	D
0.905 - 1.004	E
Over 1.005	F

Lost time for signal Yellow and All red intervals: 0.10 of V/C Ratio

NOTES:

EVAN BROOKS ASSOCIATES, PASADENA, CALIFORNIA

INTERSECTION CAPACITY UTILIZATION ANALYSIS

Location: Inglewood Avenue and El Segundo Boulevard **City:** Hawthorne
Project No.: EBA2014-31 **Analyzed By:** MYR **File Name:** 2014-31-12 5

Problem Condition: Future 2035 Cumulative Traffic Volumes Without Project
Existing Geometric Configuration

Movement	Available Lanes		Peak Hour Volumes								Movement V/C Per Lane		Critical V/C	
			Existing		Other Proj.		Project		Study Vol.					
	No.	Cap.	AM	PM	AM	PM	AM	PM	AM	PM	AM	PM	AM	PM
N/B Left	1.0	1600	177	94	0	0	0	0	211	116	0.132	0.073	0.132	0.073
N/B Thru	2.0	3200	813	657	0	0	0	0	969	812	0.336	0.311		
N/B Right	0.0	0	89	149	0	0	0	0	106	184	0.000	0.000		
S/B Left	1.0	1600	102	127	0	0	0	0	122	157	0.076	0.098		
S/B Thru	2.0	3200	649	917	0	0	0	0	774	1133	0.289	0.386	0.289	0.386
S/B Right	0.0	0	128	83	0	0	0	0	153	103	0.000	0.000		
E/B Left	1.0	1600	169	236	0	0	0	0	201	292	0.126	0.182	0.126	
E/B Thru	3.0	4800	633	1645	0	0	0	0	755	2033	0.157	0.424		0.424
E/B Right	1.0	1600	102	330	0	0	0	0	122	408	0.076	0.182		
W/B Left	1.0	1600	162	213	0	0	0	0	193	263	0.121	0.165		0.165
W/B Thru	3.0	4800	1032	544	0	0	0	0	1230	672	0.293	0.177	0.293	
W/B Right	0.0	0	146	142	0	0	0	0	174	176	0.000	0.000		
	ANALYSIS RESULTS :								Sum Of Critical V/C:				0.840	1.047
									Lost Time:				0.100	0.100
									Total V/C:				0.940	1.147
									Level Of Service:				E	F

ASSUMPTIONS AND METHODOLOGY

Existing Counts Year: 2015
Study Volume Year: 2020 (2035 for Cumulative)
Annual Growth Factor: 0.26 Percent

Lane Capacity
Single Through Lane = 1600 Vehicles Per Hour
Single Turn Lane = 1600 Vehicles Per Hour
Dual Turn Lane = 2880 Vehicles Per Hour

Level Of Service Definition

Total V/C	LOS
Under 0.605	A
0.605 - 0.704	B
0.705 - 0.804	C
0.805 - 0.904	D
0.905 - 1.004	E
Over 1.005	F

Lost time for signal Yellow and All red intervals: 0.10 of V/C Ratio

NOTES:

EVAN BROOKS ASSOCIATES, PASADENA, CALIFORNIA

INTERSECTION CAPACITY UTILIZATION ANALYSIS

Location: Inglewood Avenue and El Segundo Boulevard **City:** Hawthorne
Project No.: EBA2014-31 **Analyzed By:** MYR **File Name:** 2014-31-12 4

Problem Condition: Future 2035 Cumulative Traffic Volumes With Project
Existing Geometric Configuration

Movement	Available Lanes		Peak Hour Volumes								Movement V/C Per Lane		Critical V/C	
			Existing		Other Proj.		Project		Study Vol.					
	No.	Cap.	AM	PM	AM	PM	AM	PM	AM	PM	AM	PM	AM	PM
N/B Left	1.0	1600	177	94	0	0	0	0	211	116	0.132	0.073	0.132	0.073
N/B Thru	2.0	3200	813	657	0	0	28	32	997	844	0.348	0.324		
N/B Right	0.0	0	89	149	0	0	9	9	115	193	0.000	0.000		
S/B Left	1.0	1600	102	127	0	0	12	11	133	168	0.083	0.105		
S/B Thru	2.0	3200	649	917	0	0	56	176	829	1309	0.324	0.496	0.324	0.496
S/B Right	0.0	0	128	83	0	0	56	176	208	278	0.000	0.000		
E/B Left	1.0	1600	169	236	0	0	0	0	201	292	0.126	0.182	0.126	
E/B Thru	3.0	4800	633	1645	0	0	159	168	914	2201	0.190	0.458		0.458
E/B Right	1.0	1600	102	330	0	0	0	0	122	408	0.076	0.182		
W/B Left	1.0	1600	162	213	0	0	4	11	197	275	0.123	0.172		0.172
W/B Thru	3.0	4800	1032	544	0	0	25	45	1255	717	0.299	0.190	0.299	
W/B Right	0.0	0	146	142	0	0	6	18	180	194	0.000	0.000		
	ANALYSIS RESULTS :								Sum Of Critical V/C:				0.881	1.199
									Lost Time:				0.100	0.100
									Total V/C:				0.981	1.299
									Level Of Service:				E	F

ASSUMPTIONS AND METHODOLOGY

Existing Counts Year: 2015
Study Volume Year: 2020 (2035 for Cumulative)
Annual Growth Factor: 0.26 Percent

Lane Capacity
Single Through Lane = 1600 Vehicles Per Hour
Single Turn Lane = 1600 Vehicles Per Hour
Dual Turn Lane = 2880 Vehicles Per Hour

Level Of Service Definition

Total V/C	LOS
Under 0.605	A
0.605 - 0.704	B
0.705 - 0.804	C
0.805 - 0.904	D
0.905 - 1.004	E
Over 1.005	F

Lost time for signal Yellow and All red intervals: 0.10 of V/C Ratio

NOTES:

EVAN BROOKS ASSOCIATES, PASADENA, CALIFORNIA

INTERSECTION CAPACITY UTILIZATION ANALYSIS

Location: Inglewood Avenue and El Segundo Boulevard **City:** Hawthorne
Project No.: EBA2014-31 **Analyzed By:** MYR **File Name:** 2014-31-12 6

Problem Condition: Future 2020 Cumulative Traffic Volumes With Project
Proposed Geometric Configuration with Mitigation

Movement	Available Lanes		Peak Hour Volumes								Movement V/C Per Lane		Critical V/C	
			Existing		Other Proj.		Project		Study Vol.					
	No.	Cap.	AM	PM	AM	PM	AM	PM	AM	PM	AM	PM	AM	PM
N/B Left	1.0	1600	177	94	0	0	0	0	179	95	0.112	0.060		
N/B Thru	2.0	3200	813	657	0	0	28	32	852	697	0.297	0.268	0.297	0.268
N/B Right	0.0	0	89	149	0	0	9	9	99	160	0.000	0.000		
S/B Left	1.0	1600	102	127	0	0	12	11	115	139	0.072	0.087	0.072	0.087
S/B Thru	3.0	4800	649	917	0	0	56	176	713	1105	0.149	0.230		
S/B Right	1.0	1600	128	83	0	0	56	176	185	260	0.009	0.013		
E/B Left	1.0	1600	169	236	0	0	0	0	171	239	0.107	0.149	0.107	
E/B Thru	4.0	6400	633	1645	0	0	159	168	800	1834	0.125	0.287		0.287
E/B Right	1.0	1600	102	330	0	0	0	0	103	334	0.065	0.149		
W/B Left	1.0	1600	162	213	0	0	4	11	168	227	0.105	0.142		0.142
W/B Thru	3.0	4800	1032	544	0	0	25	45	1071	596	0.255	0.158	0.255	
W/B Right	0.0	0	146	142	0	0	6	18	154	162	0.000	0.000		
	ANALYSIS RESULTS :								Sum Of Critical V/C:				0.731	0.783
									Lost Time:				0.100	0.100
									Total V/C:				0.831	0.883
									Level Of Service:				D	D

ASSUMPTIONS AND METHODOLOGY

Existing Counts Year: 2015
Study Volume Year: 2020
Annual Growth Factor: 0.26 Percent

Lane Capacity
Single Through Lane = 1600 Vehicles Per Hour
Single Turn Lane = 1600 Vehicles Per Hour
Dual Turn Lane = 2880 Vehicles Per Hour

Level Of Service Definition

Total V/C	LOS
Under 0.605	A
0.605 - 0.704	B
0.705 - 0.804	C
0.805 - 0.904	D
0.905 - 1.004	E
Over 1.005	F

Lost time for signal Yellow and All red intervals: 0.10 of V/C Ratio

NOTES:

EVAN BROOKS ASSOCIATES, PASADENA, CALIFORNIA

INTERSECTION CAPACITY UTILIZATION ANALYSIS

Location: Inglewood Avenue and El Segundo Boulevard **City:** Hawthorne
Project No.: EBA2014-31 **Analyzed By:** MYR **File Name:** 2014-31-12 7

Problem Condition: Future 2035 Cumulative Traffic Volumes With Project
Proposed Geometric Configuration with Mitigation

Movement	Available Lanes		Peak Hour Volumes								Movement V/C Per Lane		Critical V/C	
			Existing		Other Proj.		Project		Study Vol.					
	No.	Cap.	AM	PM	AM	PM	AM	PM	AM	PM	AM	PM	AM	PM
N/B Left	1.0	1600	177	94	0	0	0	0	211	116	0.132	0.073		
N/B Thru	3.0	4800	813	657	0	0	28	32	997	844	0.232	0.216	0.232	0.216
N/B Right	0.0	0	89	149	0	0	9	9	115	193	0.000	0.000		
S/B Left	1.0	1600	102	127	0	0	12	11	133	168	0.083	0.105	0.083	0.105
S/B Thru	4.0	6400	649	917	0	0	56	176	829	1309	0.130	0.205		
S/B Right	1.0	1600	128	83	0	0	56	176	208	278	0.004	0.174		
E/B Left	1.0	1600	169	236	0	0	0	0	201	292	0.126	0.182	0.126	
E/B Thru	4.0	6400	633	1645	0	0	159	168	914	2201	0.143	0.344		0.344
E/B Right	1.0	1600	102	330	0	0	0	0	122	408	0.076	0.182		
W/B Left	2.0	2880	162	213	0	0	4	11	197	275	0.068	0.095		0.095
W/B Thru	3.0	4800	1032	544	0	0	25	45	1255	717	0.299	0.190	0.299	
W/B Right	0.0	0	146	142	0	0	6	18	180	194	0.000	0.000		
	ANALYSIS RESULTS :								Sum Of Critical V/C:				0.740	0.760
									Lost Time:				0.100	0.100
									Total V/C:				0.840	0.860
									Level Of Service:				D	D

ASSUMPTIONS AND METHODOLOGY

Existing Counts Year: 2015
Study Volume Year: 2020 (2035 for Cumulative)
Annual Growth Factor: 0.26 Percent

Lane Capacity
Single Through Lane = 1600 Vehicles Per Hour
Single Turn Lane = 1600 Vehicles Per Hour
Dual Turn Lane = 2880 Vehicles Per Hour

Level Of Service Definition

Total V/C	LOS
Under 0.605	A
0.605 - 0.704	B
0.705 - 0.804	C
0.805 - 0.904	D
0.905 - 1.004	E
Over 1.005	F

Lost time for signal Yellow and All red intervals: 0.10 of V/C Ratio

NOTES:

EVAN BROOKS ASSOCIATES, PASADENA, CALIFORNIA

INTERSECTION CAPACITY UTILIZATION ANALYSIS

Location: Inglewood Avenue and Rosecrans Avenue **City:** Hawthorne
Project No.: EBA2014-31 **Analyzed By:** MYR **File Name:** 2014-31-13 1

Problem Condition: Existing 2015 Traffic Conditions (Count Date: 2-19-15)
Existing Geometric Configuration

Movement	Available Lanes		Peak Hour Volumes								Movement V/C Per Lane		Critical V/C	
			Existing		Other Proj.		Project		Study Vol.					
	No.	Cap.	AM	PM	AM	PM	AM	PM	AM	PM	AM	PM	AM	PM
N/B Left	1.0	1600	248	150	0	0	0	0	248	150	0.155	0.094	0.155	
N/B Thru	2.0	3200	608	632	0	0	0	0	608	632	0.254	0.249		0.249
N/B Right	0.0	0	205	165	0	0	0	0	205	165	0.000	0.000		
S/B Left	1.0	1600	201	326	0	0	0	0	201	326	0.126	0.204		0.204
S/B Thru	2.0	3200	830	933	0	0	0	0	830	933	0.259	0.292	0.259	
S/B Right	1.0	1600	185	153	0	0	0	0	185	153	0.058	0.096		
E/B Left	1.0	1600	93	220	0	0	0	0	93	220	0.058	0.138	0.058	
E/B Thru	3.0	4800	335	1162	0	0	0	0	335	1162	0.070	0.242		0.242
E/B Right	1.0	1600	52	148	0	0	0	0	52	148	0.033	0.093		
W/B Left	1.0	1600	213	200	0	0	0	0	213	200	0.133	0.125		0.125
W/B Thru	3.0	4800	1413	749	0	0	0	0	1413	749	0.294	0.156	0.294	
W/B Right	1.0	1600	164	169	0	0	0	0	164	169	0.103	0.106		
	ANALYSIS RESULTS :								Sum Of Critical V/C:				0.767	0.820
									Lost Time:				0.100	0.100
									Total V/C:				0.867	0.920
									Level Of Service:				D	E

ASSUMPTIONS AND METHODOLOGY

Existing Counts Year: 2015
Study Volume Year: 2015
Annual Growth Factor: 0.26 Percent

Lane Capacity
Single Through Lane = 1600 Vehicles Per Hour
Single Turn Lane = 1600 Vehicles Per Hour
Dual Turn Lane = 2880 Vehicles Per Hour

Level Of Service Definition

Total V/C	LOS
Under 0.605	A
0.605 - 0.704	B
0.705 - 0.804	C
0.805 - 0.904	D
0.905 - 1.004	E
Over 1.005	F

Lost time for signal Yellow and All red intervals: 0.10 of V/C Ratio

NOTES:

EVAN BROOKS ASSOCIATES, PASADENA, CALIFORNIA

INTERSECTION CAPACITY UTILIZATION ANALYSIS

Location: Inglewood Avenue and Rosecrans Avenue **City:** Hawthorne
Project No.: EBA2014-31 **Analyzed By:** MYR **File Name:** 2014-31-13 2

Problem Condition: Future 2020 Traffic Volumes with Ambient Growth
Existing Geometric Configuration

Movement	Available Lanes		Peak Hour Volumes								Movement V/C Per Lane		Critical V/C	
			Existing		Other Proj.		Project		Study Vol.					
	No.	Cap.	AM	PM	AM	PM	AM	PM	AM	PM	AM	PM	AM	PM
N/B Left	1.0	1600	248	150	0	0	0	0	251	152	0.157	0.095	0.157	
N/B Thru	2.0	3200	608	632	0	0	0	0	616	640	0.257	0.252		0.252
N/B Right	0.0	0	205	165	0	0	0	0	208	167	0.000	0.000		
S/B Left	1.0	1600	201	326	0	0	0	0	204	330	0.127	0.206		0.206
S/B Thru	2.0	3200	830	933	0	0	0	0	841	945	0.263	0.295	0.263	
S/B Right	1.0	1600	185	153	0	0	0	0	187	155	0.058	0.097		
E/B Left	1.0	1600	93	220	0	0	0	0	94	223	0.059	0.139	0.059	
E/B Thru	3.0	4800	335	1162	0	0	0	0	339	1177	0.071	0.245		0.245
E/B Right	1.0	1600	52	148	0	0	0	0	53	150	0.033	0.094		
W/B Left	1.0	1600	213	200	0	0	0	0	216	203	0.135	0.127		0.127
W/B Thru	3.0	4800	1413	749	0	0	0	0	1431	759	0.298	0.158	0.298	
W/B Right	1.0	1600	164	169	0	0	0	0	166	171	0.104	0.107		
	ANALYSIS RESULTS :								Sum Of Critical V/C:				0.777	0.831
									Lost Time:				0.100	0.100
									Total V/C:				0.877	0.931
									Level Of Service:				D	E

ASSUMPTIONS AND METHODOLOGY

Existing Counts Year: 2015
Study Volume Year: 2020
Annual Growth Factor: 0.26 Percent

Lane Capacity
Single Through Lane = 1600 Vehicles Per Hour
Single Turn Lane = 1600 Vehicles Per Hour
Dual Turn Lane = 2880 Vehicles Per Hour

Level Of Service Definition

Total V/C	LOS
Under 0.605	A
0.605 - 0.704	B
0.705 - 0.804	C
0.805 - 0.904	D
0.905 - 1.004	E
Over 1.005	F

Lost time for signal Yellow and All red intervals: 0.10 of V/C Ratio

NOTES:

EVAN BROOKS ASSOCIATES, PASADENA, CALIFORNIA

INTERSECTION CAPACITY UTILIZATION ANALYSIS

Location: Inglewood Avenue and Rosecrans Avenue **City:** Hawthorne
Project No.: EBA2014-31 **Analyzed By:** MYR **File Name:** 2014-31-13 3

Problem Condition: Future 2020 Cumulative Traffic Volumes With Project
Existing Geometric Configuration

Movement	Available Lanes		Peak Hour Volumes								Movement V/C Per Lane		Critical V/C	
			Existing		Other Proj.		Project		Study Vol.					
	No.	Cap.	AM	PM	AM	PM	AM	PM	AM	PM	AM	PM	AM	PM
N/B Left	1.0	1600	248	150	0	0	0	0	251	152	0.157	0.095	0.157	
N/B Thru	2.0	3200	608	632	0	0	38	41	654	681	0.270	0.266		0.266
N/B Right	0.0	0	205	165	0	0	3	2	210	169	0.000	0.000		
S/B Left	1.0	1600	201	326	0	0	0	0	204	330	0.127	0.206		0.206
S/B Thru	2.0	3200	830	933	0	0	4	11	845	956	0.264	0.299	0.264	
S/B Right	1.0	1600	185	153	0	0	0	0	187	155	0.058	0.097		
E/B Left	1.0	1600	93	220	0	0	0	0	94	223	0.059	0.139	0.059	
E/B Thru	3.0	4800	335	1162	0	0	40	42	380	1220	0.079	0.254		0.254
E/B Right	1.0	1600	52	148	0	0	0	0	53	150	0.033	0.094		
W/B Left	1.0	1600	213	200	0	0	15	46	231	249	0.144	0.155		0.155
W/B Thru	3.0	4800	1413	749	0	0	19	57	1451	816	0.302	0.170	0.302	
W/B Right	1.0	1600	164	169	0	0	0	0	166	171	0.104	0.107		
	ANALYSIS RESULTS :								Sum Of Critical V/C:				0.782	0.881
									Lost Time:				0.100	0.100
									Total V/C:				0.882	0.981
									Level Of Service:				D	E

ASSUMPTIONS AND METHODOLOGY

Existing Counts Year: 2015
Study Volume Year: 2020
Annual Growth Factor: 0.26 Percent

Lane Capacity
Single Through Lane = 1600 Vehicles Per Hour
Single Turn Lane = 1600 Vehicles Per Hour
Dual Turn Lane = 2880 Vehicles Per Hour

Level Of Service Definition

Total V/C	LOS
Under 0.605	A
0.605 - 0.704	B
0.705 - 0.804	C
0.805 - 0.904	D
0.905 - 1.004	E
Over 1.005	F

Lost time for signal Yellow and All red intervals: 0.10 of V/C Ratio

NOTES:

EVAN BROOKS ASSOCIATES, PASADENA, CALIFORNIA

INTERSECTION CAPACITY UTILIZATION ANALYSIS

Location: Inglewood Avenue and Rosecrans Avenue **City:** Hawthorne
Project No.: EBA2014-31 **Analyzed By:** MYR **File Name:** 2014-31-13 5

Problem Condition: Future 2035 Cumulative Traffic Volumes Without Project
Existing Geometric Configuration

Movement	Available Lanes		Peak Hour Volumes								Movement V/C Per Lane		Critical V/C	
			Existing		Other Proj.		Project		Study Vol.					
	No.	Cap.	AM	PM	AM	PM	AM	PM	AM	PM	AM	PM	AM	PM
N/B Left	1.0	1600	248	150	0	0	0	0	296	185	0.185	0.116	0.185	
N/B Thru	2.0	3200	608	632	0	0	0	0	725	781	0.303	0.308		0.308
N/B Right	0.0	0	205	165	0	0	0	0	244	204	0.000	0.000		
S/B Left	1.0	1600	201	326	0	0	0	0	240	403	0.150	0.252		0.252
S/B Thru	2.0	3200	830	933	0	0	0	0	989	1153	0.309	0.360	0.309	
S/B Right	1.0	1600	185	153	0	0	0	0	221	189	0.069	0.118		
E/B Left	1.0	1600	93	220	0	0	0	0	111	272	0.069	0.170	0.069	
E/B Thru	3.0	4800	335	1162	0	0	0	0	399	1436	0.083	0.299		0.299
E/B Right	1.0	1600	52	148	0	0	0	0	62	183	0.039	0.114		
W/B Left	1.0	1600	213	200	0	0	0	0	254	247	0.159	0.155		0.155
W/B Thru	3.0	4800	1413	749	0	0	0	0	1684	926	0.351	0.193	0.351	
W/B Right	1.0	1600	164	169	0	0	0	0	195	209	0.122	0.131		
	ANALYSIS RESULTS :								Sum Of Critical V/C:				0.914	1.013
									Lost Time:				0.100	0.100
									Total V/C:				1.014	1.113
									Level Of Service:				F	F

ASSUMPTIONS AND METHODOLOGY

Existing Counts Year: 2015
Study Volume Year: 2020 (2035 for Cumulative)
Annual Growth Factor: 0.26 Percent

Lane Capacity
Single Through Lane = 1600 Vehicles Per Hour
Single Turn Lane = 1600 Vehicles Per Hour
Dual Turn Lane = 2880 Vehicles Per Hour

Level Of Service Definition

Total V/C	LOS
Under 0.605	A
0.605 - 0.704	B
0.705 - 0.804	C
0.805 - 0.904	D
0.905 - 1.004	E
Over 1.005	F

Lost time for signal Yellow and All red intervals: 0.10 of V/C Ratio

NOTES:

EVAN BROOKS ASSOCIATES, PASADENA, CALIFORNIA

INTERSECTION CAPACITY UTILIZATION ANALYSIS

Location: Inglewood Avenue and Rosecrans Avenue **City:** Hawthorne
Project No.: EBA2014-31 **Analyzed By:** MYR **File Name:** 2014-31-13 4

Problem Condition: Future 2035 Cumulative Traffic Volumes With Project
Existing Geometric Configuration

Movement	Available Lanes		Peak Hour Volumes								Movement V/C Per Lane		Critical V/C	
			Existing		Other Proj.		Project		Study Vol.					
	No.	Cap.	AM	PM	AM	PM	AM	PM	AM	PM	AM	PM	AM	PM
N/B Left	1.0	1600	248	150	0	0	0	0	296	185	0.185	0.116	0.185	
N/B Thru	2.0	3200	608	632	0	0	38	41	762	822	0.315	0.321		0.321
N/B Right	0.0	0	205	165	0	0	3	2	247	206	0.000	0.000		
S/B Left	1.0	1600	201	326	0	0	0	0	240	403	0.150	0.252		0.252
S/B Thru	2.0	3200	830	933	0	0	4	11	993	1164	0.310	0.364	0.310	
S/B Right	1.0	1600	185	153	0	0	0	0	221	189	0.069	0.118		
E/B Left	1.0	1600	93	220	0	0	0	0	111	272	0.069	0.170	0.069	
E/B Thru	3.0	4800	335	1162	0	0	40	42	439	1479	0.092	0.308		0.308
E/B Right	1.0	1600	52	148	0	0	0	0	62	183	0.039	0.114		
W/B Left	1.0	1600	213	200	0	0	15	46	269	293	0.168	0.183		0.183
W/B Thru	3.0	4800	1413	749	0	0	19	57	1703	983	0.355	0.205	0.355	
W/B Right	1.0	1600	164	169	0	0	0	0	195	209	0.122	0.131		
	ANALYSIS RESULTS :								Sum Of Critical V/C:				0.919	1.064
									Lost Time:				0.100	0.100
									Total V/C:				1.019	1.164
									Level Of Service:				F	F

ASSUMPTIONS AND METHODOLOGY

Existing Counts Year: 2015
Study Volume Year: 2020 (2035 for Cumulative)
Annual Growth Factor: 0.26 Percent

Lane Capacity
Single Through Lane = 1600 Vehicles Per Hour
Single Turn Lane = 1600 Vehicles Per Hour
Dual Turn Lane = 2880 Vehicles Per Hour

Level Of Service Definition

Total V/C	LOS
Under 0.605	A
0.605 - 0.704	B
0.705 - 0.804	C
0.805 - 0.904	D
0.905 - 1.004	E
Over 1.005	F

Lost time for signal Yellow and All red intervals: 0.10 of V/C Ratio

NOTES:

EVAN BROOKS ASSOCIATES, PASADENA, CALIFORNIA

INTERSECTION CAPACITY UTILIZATION ANALYSIS

Location: Inglewood Avenue and Rosecrans Avenue **City:** Hawthorne
Project No.: EBA2014-31 **Analyzed By:** MYR **File Name:** 2014-31-13 6

Problem Condition: Future 2020 Cumulative Traffic Volumes With Project
Proposed Geometric Configuration with Mitigation

Movement	Available Lanes		Peak Hour Volumes								Movement V/C Per Lane		Critical V/C	
			Existing		Other Proj.		Project		Study Vol.					
	No.	Cap.	AM	PM	AM	PM	AM	PM	AM	PM	AM	PM	AM	PM
N/B Left	1.0	1600	248	150	0	0	0	0	251	152	0.157	0.095	0.157	0.095
N/B Thru	3.0	4800	608	632	0	0	38	41	654	681	0.180	0.177		
N/B Right	0.0	0	205	165	0	0	3	2	210	169	0.000	0.000		
S/B Left	1.0	1600	201	326	0	0	0	0	204	330	0.127	0.206		
S/B Thru	2.0	3200	830	933	0	0	4	11	845	956	0.264	0.299	0.264	0.299
S/B Right	1.0	1600	185	153	0	0	0	0	187	155	0.058	0.097		
E/B Left	1.0	1600	93	220	0	0	0	0	94	223	0.059	0.139	0.059	
E/B Thru	4.0	6400	335	1162	0	0	40	42	380	1220	0.059	0.191		0.191
E/B Right	1.0	1600	52	148	0	0	0	0	53	150	0.033	0.094		
W/B Left	1.0	1600	213	200	0	0	15	46	231	249	0.144	0.155		0.155
W/B Thru	3.0	4800	1413	749	0	0	19	57	1451	816	0.302	0.170	0.302	
W/B Right	1.0	1600	164	169	0	0	0	0	166	171	0.104	0.107		
	ANALYSIS RESULTS :								Sum Of Critical V/C:				0.782	0.740
									Lost Time:				0.100	0.100
									Total V/C:				0.882	0.840
									Level Of Service:				D	D

ASSUMPTIONS AND METHODOLOGY

Existing Counts Year: 2015
Study Volume Year: 2020
Annual Growth Factor: 0.26 Percent

Lane Capacity
Single Through Lane = 1600 Vehicles Per Hour
Single Turn Lane = 1600 Vehicles Per Hour
Dual Turn Lane = 2880 Vehicles Per Hour

Level Of Service Definition

Total V/C	LOS
Under 0.605	A
0.605 - 0.704	B
0.705 - 0.804	C
0.805 - 0.904	D
0.905 - 1.004	E
Over 1.005	F

Lost time for signal Yellow and All red intervals: 0.10 of V/C Ratio

NOTES:

EVAN BROOKS ASSOCIATES, PASADENA, CALIFORNIA

INTERSECTION CAPACITY UTILIZATION ANALYSIS

Location: Inglewood Avenue and Rosecrans Avenue **City:** Hawthorne
Project No.: EBA2014-31 **Analyzed By:** MYR **File Name:** 2014-31-13 7

Problem Condition: Future 2035 Cumulative Traffic Volumes With Project
Proposed Geometric Configuration with Mitigation

Movement	Available Lanes		Peak Hour Volumes								Movement V/C Per Lane		Critical V/C	
			Existing		Other Proj.		Project		Study Vol.					
	No.	Cap.	AM	PM	AM	PM	AM	PM	AM	PM	AM	PM	AM	PM
N/B Left	1.0	1600	248	150	0	0	0	0	296	185	0.185	0.116	0.185	
N/B Thru	3.0	4800	608	632	0	0	38	41	762	822	0.159	0.171		0.171
N/B Right	1.0	1600	205	165	0	0	3	2	247	206	0.070	0.037		
S/B Left	1.0	1600	201	326	0	0	0	0	240	403	0.150	0.252		0.252
S/B Thru	3.0	4800	830	933	0	0	4	11	993	1164	0.207	0.243	0.207	
S/B Right	1.0	1600	185	153	0	0	0	0	221	189	0.069	0.118		
E/B Left	1.0	1600	93	220	0	0	0	0	111	272	0.069	0.170	0.069	0.170
E/B Thru	4.0	6400	335	1162	0	0	40	42	439	1479	0.069	0.231		
E/B Right	1.0	1600	52	148	0	0	0	0	62	183	0.039	0.114		
W/B Left	2.0	2880	213	200	0	0	15	46	269	293	0.093	0.102		
W/B Thru	4.0	6400	1413	749	0	0	19	57	1703	983	0.297	0.186	0.297	0.186
W/B Right	0.0	0	164	169	0	0	0	0	195	209	0.000	0.000		
	ANALYSIS RESULTS :								Sum Of Critical V/C:				0.758	0.779
									Lost Time:				0.100	0.100
									Total V/C:				0.858	0.879
									Level Of Service:				D	D

ASSUMPTIONS AND METHODOLOGY

Existing Counts Year: 2015
Study Volume Year: 2020 (2035 for Cumulative)
Annual Growth Factor: 0.26 Percent

Lane Capacity
Single Through Lane = 1600 Vehicles Per Hour
Single Turn Lane = 1600 Vehicles Per Hour
Dual Turn Lane = 2880 Vehicles Per Hour

Level Of Service Definition

Total V/C	LOS
Under 0.605	A
0.605 - 0.704	B
0.705 - 0.804	C
0.805 - 0.904	D
0.905 - 1.004	E
Over 1.005	F

Lost time for signal Yellow and All red intervals: 0.10 of V/C Ratio

NOTES:

EVAN BROOKS ASSOCIATES, PASADENA, CALIFORNIA

INTERSECTION CAPACITY UTILIZATION ANALYSIS

Location: Prairie Avenue and El Segundo Boulevard **City:** Hawthorne
Project No.: EBA2014-31 **Analyzed By:** MYR **File Name:** 2014-31-14 1

Problem Condition: Existing 2015 Traffic Conditions (Count Date: 2-19-15)
Existing Geometric Configuration

Movement	Available Lanes		Peak Hour Volumes								Movement V/C Per Lane		Critical V/C	
			Existing		Other Proj.		Project		Study Vol.					
	No.	Cap.	AM	PM	AM	PM	AM	PM	AM	PM	AM	PM	AM	PM
N/B Left	1.0	1600	288	213	0	0	0	0	288	213	0.180	0.133		0.133
N/B Thru	3.0	4800	1222	851	0	0	0	0	1222	851	0.281	0.204	0.281	
N/B Right	0.0	0	126	126	0	0	0	0	126	126	0.000	0.000		
S/B Left	1.0	1600	202	298	0	0	0	0	202	298	0.126	0.186	0.126	
S/B Thru	3.0	4800	936	1185	0	0	0	0	936	1185	0.214	0.265		0.265
S/B Right	0.0	0	93	88	0	0	0	0	93	88	0.000	0.000		
E/B Left	2.0	2880	166	139	0	0	0	0	166	139	0.058	0.048	0.058	
E/B Thru	3.0	4800	581	1283	0	0	0	0	581	1283	0.157	0.319		0.319
E/B Right	0.0	0	171	248	0	0	0	0	171	248	0.000	0.000		
W/B Left	2.0	2880	169	182	0	0	0	0	169	182	0.059	0.063		0.063
W/B Thru	3.0	4800	1147	584	0	0	0	0	1147	584	0.304	0.177	0.304	
W/B Right	0.0	0	311	266	0	0	0	0	311	266	0.000	0.000		
	ANALYSIS RESULTS :								Sum Of Critical V/C:				0.768	0.780
									Lost Time:				0.100	0.100
									Total V/C:				0.868	0.880
									Level Of Service:				D	D

ASSUMPTIONS AND METHODOLOGY

Existing Counts Year: 2015
Study Volume Year: 2015
Annual Growth Factor: 0.26 Percent

Lane Capacity
Single Through Lane = 1600 Vehicles Per Hour
Single Turn Lane = 1600 Vehicles Per Hour
Dual Turn Lane = 2880 Vehicles Per Hour

Level Of Service Definition

Total V/C	LOS
Under 0.605	A
0.605 - 0.704	B
0.705 - 0.804	C
0.805 - 0.904	D
0.905 - 1.004	E
Over 1.005	F

Lost time for signal Yellow and All red intervals: 0.10 of V/C Ratio

NOTES:

EVAN BROOKS ASSOCIATES, PASADENA, CALIFORNIA

INTERSECTION CAPACITY UTILIZATION ANALYSIS

Location: Prairie Avenue and El Segundo Boulevard **City:** Hawthorne
Project No.: EBA2014-31 **Analyzed By:** MYR **File Name:** 2014-31-14 2

Problem Condition: Future 2020 Traffic Volumes with Ambient Growth
Existing Geometric Configuration

Movement	Available Lanes		Peak Hour Volumes								Movement V/C Per Lane		Critical V/C	
			Existing		Other Proj.		Project		Study Vol.					
	No.	Cap.	AM	PM	AM	PM	AM	PM	AM	PM	AM	PM	AM	PM
N/B Left	1.0	1600	288	213	0	0	0	0	292	216	0.182	0.135		0.135
N/B Thru	3.0	4800	1222	851	0	0	0	0	1238	862	0.285	0.206	0.285	
N/B Right	0.0	0	126	126	0	0	0	0	128	128	0.000	0.000		
S/B Left	1.0	1600	202	298	0	0	0	0	205	302	0.128	0.189	0.128	
S/B Thru	3.0	4800	936	1185	0	0	0	0	948	1200	0.217	0.269		0.269
S/B Right	0.0	0	93	88	0	0	0	0	94	89	0.000	0.000		
E/B Left	2.0	2880	166	139	0	0	0	0	168	141	0.058	0.049	0.058	
E/B Thru	3.0	4800	581	1283	0	0	0	0	589	1300	0.159	0.323		0.323
E/B Right	0.0	0	171	248	0	0	0	0	173	251	0.000	0.000		
W/B Left	2.0	2880	169	182	0	0	0	0	171	184	0.059	0.064		0.064
W/B Thru	3.0	4800	1147	584	0	0	0	0	1162	592	0.308	0.179	0.308	
W/B Right	0.0	0	311	266	0	0	0	0	315	269	0.000	0.000		
	ANALYSIS RESULTS :								Sum Of Critical V/C:				0.779	0.791
									Lost Time:				0.100	0.100
									Total V/C:				0.879	0.891
									Level Of Service:				D	D

ASSUMPTIONS AND METHODOLOGY

Existing Counts Year: 2015
Study Volume Year: 2020
Annual Growth Factor: 0.26 Percent

Lane Capacity
Single Through Lane = 1600 Vehicles Per Hour
Single Turn Lane = 1600 Vehicles Per Hour
Dual Turn Lane = 2880 Vehicles Per Hour

Level Of Service Definition

Total V/C	LOS
Under 0.605	A
0.605 - 0.704	B
0.705 - 0.804	C
0.805 - 0.904	D
0.905 - 1.004	E
Over 1.005	F

Lost time for signal Yellow and All red intervals: 0.10 of V/C Ratio

NOTES:

EVAN BROOKS ASSOCIATES, PASADENA, CALIFORNIA

INTERSECTION CAPACITY UTILIZATION ANALYSIS

Location: Prairie Avenue and El Segundo Boulevard **City:** Hawthorne
Project No.: EBA2014-31 **Analyzed By:** MYR **File Name:** 2014-31-14 3

Problem Condition: Future 2020 Cumulative Traffic Volumes With Project
Existing Geometric Configuration

Movement	Available Lanes		Peak Hour Volumes								Movement V/C Per Lane		Critical V/C	
			Existing		Other Proj.		Project		Study Vol.					
	No.	Cap.	AM	PM	AM	PM	AM	PM	AM	PM	AM	PM	AM	PM
N/B Left	1.0	1600	288	213	0	0	28	32	320	248	0.200	0.155	0.200	0.155
N/B Thru	3.0	4800	1222	851	0	0	0	0	1238	862	0.285	0.206		
N/B Right	0.0	0	126	126	0	0	0	0	128	128	0.000	0.000		
S/B Left	1.0	1600	202	298	0	0	0	2	205	304	0.128	0.190		
S/B Thru	3.0	4800	936	1185	0	0	0	0	948	1200	0.218	0.269	0.218	0.269
S/B Right	0.0	0	93	88	0	0	3	0	97	89	0.000	0.000		
E/B Left	2.0	2880	166	139	0	0	10	2	178	143	0.062	0.050	0.062	
E/B Thru	3.0	4800	581	1283	0	0	34	114	622	1414	0.168	0.356		0.356
E/B Right	0.0	0	171	248	0	0	13	44	187	295	0.000	0.000		
W/B Left	2.0	2880	169	182	0	0	19	0	190	184	0.066	0.064		0.064
W/B Thru	3.0	4800	1147	584	0	0	60	84	1222	675	0.320	0.197	0.320	
W/B Right	0.0	0	311	266	0	0	0	0	315	269	0.000	0.000		
	ANALYSIS RESULTS :								Sum Of Critical V/C:				0.800	0.843
									Lost Time:				0.100	0.100
									Total V/C:				0.900	0.943
									Level Of Service:				D	E

ASSUMPTIONS AND METHODOLOGY

Existing Counts Year: 2015
Study Volume Year: 2020
Annual Growth Factor: 0.26 Percent

Lane Capacity
Single Through Lane = 1600 Vehicles Per Hour
Single Turn Lane = 1600 Vehicles Per Hour
Dual Turn Lane = 2880 Vehicles Per Hour

Level Of Service Definition

Total V/C	LOS
Under 0.605	A
0.605 - 0.704	B
0.705 - 0.804	C
0.805 - 0.904	D
0.905 - 1.004	E
Over 1.005	F

Lost time for signal Yellow and All red intervals: 0.10 of V/C Ratio

NOTES:

EVAN BROOKS ASSOCIATES, PASADENA, CALIFORNIA

INTERSECTION CAPACITY UTILIZATION ANALYSIS

Location: Prairie Avenue and El Segundo Boulevard **City:** Hawthorne
Project No.: EBA2014-31 **Analyzed By:** MYR **File Name:** 2014-31-14 5

Problem Condition: Future 2035 Cumulative Traffic Volumes Without Project
Existing Geometric Configuration

Movement	Available Lanes		Peak Hour Volumes								Movement V/C Per Lane		Critical V/C	
			Existing		Other Proj.		Project		Study Vol.					
	No.	Cap.	AM	PM	AM	PM	AM	PM	AM	PM	AM	PM	AM	PM
N/B Left	1.0	1600	288	213	0	0	0	0	343	263	0.215	0.165		0.165
N/B Thru	3.0	4800	1222	851	0	0	0	0	1457	1052	0.335	0.252	0.335	
N/B Right	0.0	0	126	126	0	0	0	0	150	156	0.000	0.000		
S/B Left	1.0	1600	202	298	0	0	0	0	241	368	0.150	0.230	0.150	
S/B Thru	3.0	4800	936	1185	0	0	0	0	1116	1465	0.256	0.328		0.328
S/B Right	0.0	0	93	88	0	0	0	0	111	109	0.000	0.000		
E/B Left	2.0	2880	166	139	0	0	0	0	198	172	0.069	0.060	0.069	
E/B Thru	3.0	4800	581	1283	0	0	0	0	693	1586	0.187	0.394		0.394
E/B Right	0.0	0	171	248	0	0	0	0	204	307	0.000	0.000		
W/B Left	2.0	2880	169	182	0	0	0	0	201	225	0.070	0.078		0.078
W/B Thru	3.0	4800	1147	584	0	0	0	0	1367	722	0.362	0.219	0.362	
W/B Right	0.0	0	311	266	0	0	0	0	371	329	0.000	0.000		
	ANALYSIS RESULTS :								Sum Of Critical V/C:				0.916	0.965
									Lost Time:				0.100	0.100
									Total V/C:				1.016	1.065
									Level Of Service:				F	F

ASSUMPTIONS AND METHODOLOGY

Existing Counts Year: 2015
Study Volume Year: 2020 (2035 for Cumulative)
Annual Growth Factor: 0.26 Percent

Lane Capacity
Single Through Lane = 1600 Vehicles Per Hour
Single Turn Lane = 1600 Vehicles Per Hour
Dual Turn Lane = 2880 Vehicles Per Hour

Level Of Service Definition

Total V/C	LOS
Under 0.605	A
0.605 - 0.704	B
0.705 - 0.804	C
0.805 - 0.904	D
0.905 - 1.004	E
Over 1.005	F

Lost time for signal Yellow and All red intervals: 0.10 of V/C Ratio

NOTES:

EVAN BROOKS ASSOCIATES, PASADENA, CALIFORNIA

INTERSECTION CAPACITY UTILIZATION ANALYSIS

Location: Prairie Avenue and El Segundo Boulevard **City:** Hawthorne
Project No.: EBA2014-31 **Analyzed By:** MYR **File Name:** 2014-31-14 4

Problem Condition: Future 2035 Cumulative Traffic Volumes With Project
Existing Geometric Configuration

Movement	Available Lanes		Peak Hour Volumes								Movement V/C Per Lane		Critical V/C	
			Existing		Other Proj.		Project		Study Vol.					
	No.	Cap.	AM	PM	AM	PM	AM	PM	AM	PM	AM	PM	AM	PM
N/B Left	1.0	1600	288	213	0	0	28	32	372	295	0.232	0.184	0.232	0.184
N/B Thru	3.0	4800	1222	851	0	0	0	0	1457	1052	0.335	0.252		
N/B Right	0.0	0	126	126	0	0	0	0	150	156	0.000	0.000		
S/B Left	1.0	1600	202	298	0	0	0	2	241	370	0.150	0.231		
S/B Thru	3.0	4800	936	1185	0	0	0	0	1116	1465	0.256	0.328	0.256	0.328
S/B Right	0.0	0	93	88	0	0	3	0	113	109	0.000	0.000		
E/B Left	2.0	2880	166	139	0	0	10	2	208	174	0.072	0.060	0.072	
E/B Thru	3.0	4800	581	1283	0	0	34	114	726	1700	0.197	0.427		0.427
E/B Right	0.0	0	171	248	0	0	13	44	217	350	0.000	0.000		
W/B Left	2.0	2880	169	182	0	0	19	0	220	225	0.076	0.078		0.078
W/B Thru	3.0	4800	1147	584	0	0	60	84	1427	805	0.375	0.236	0.375	
W/B Right	0.0	0	311	266	0	0	0	0	371	329	0.000	0.000		
	ANALYSIS RESULTS :								Sum Of Critical V/C:				0.935	1.017
									Lost Time:				0.100	0.100
									Total V/C:				1.035	1.117
									Level Of Service:				F	F

ASSUMPTIONS AND METHODOLOGY

Existing Counts Year: 2015
Study Volume Year: 2020 (2035 for Cumulative)
Annual Growth Factor: 0.26 Percent

Lane Capacity
Single Through Lane = 1600 Vehicles Per Hour
Single Turn Lane = 1600 Vehicles Per Hour
Dual Turn Lane = 2880 Vehicles Per Hour

Level Of Service Definition

Total V/C	LOS
Under 0.605	A
0.605 - 0.704	B
0.705 - 0.804	C
0.805 - 0.904	D
0.905 - 1.004	E
Over 1.005	F

Lost time for signal Yellow and All red intervals: 0.10 of V/C Ratio

NOTES:

EVAN BROOKS ASSOCIATES, PASADENA, CALIFORNIA

INTERSECTION CAPACITY UTILIZATION ANALYSIS

Location: Prairie Avenue and El Segundo Boulevard **City:** Hawthorne
Project No.: EBA2014-31 **Analyzed By:** MYR **File Name:** 2014-31-14 6

Problem Condition: Future 2020 Cumulative Traffic Volumes With Project
Proposed Geometric Configuration with Mitigation

Movement	Available Lanes		Peak Hour Volumes								Movement V/C Per Lane		Critical V/C	
			Existing		Other Proj.		Project		Study Vol.					
	No.	Cap.	AM	PM	AM	PM	AM	PM	AM	PM	AM	PM	AM	PM
N/B Left	1.0	1600	288	213	0	0	28	32	320	248	0.200	0.155	0.200	0.155
N/B Thru	3.0	4800	1222	851	0	0	0	0	1238	862	0.285	0.206		
N/B Right	0.0	0	126	126	0	0	0	0	128	128	0.000	0.000		
S/B Left	1.0	1600	202	298	0	0	0	2	205	304	0.128	0.190		
S/B Thru	3.0	4800	936	1185	0	0	0	0	948	1200	0.218	0.269	0.218	0.269
S/B Right	0.0	0	93	88	0	0	3	0	97	89	0.000	0.000		
E/B Left	2.0	2880	166	139	0	0	10	2	178	143	0.062	0.050	0.062	
E/B Thru	3.0	4800	581	1283	0	0	34	114	622	1414	0.130	0.295		0.295
E/B Right	1.0	1600	171	248	0	0	13	44	187	295	0.117	0.030		
W/B Left	2.0	2880	169	182	0	0	19	0	190	184	0.066	0.064		0.064
W/B Thru	3.0	4800	1147	584	0	0	60	84	1222	675	0.255	0.141	0.255	
W/B Right	1.0	1600	311	266	0	0	0	0	315	269	0.069	0.168		
	ANALYSIS RESULTS :								Sum Of Critical V/C:				0.734	0.782
									Lost Time:				0.100	0.100
									Total V/C:				0.834	0.882
									Level Of Service:				D	D

ASSUMPTIONS AND METHODOLOGY

Existing Counts Year: 2015
Study Volume Year: 2020
Annual Growth Factor: 0.26 Percent

Lane Capacity
Single Through Lane = 1600 Vehicles Per Hour
Single Turn Lane = 1600 Vehicles Per Hour
Dual Turn Lane = 2880 Vehicles Per Hour

Level Of Service Definition

Total V/C	LOS
Under 0.605	A
0.605 - 0.704	B
0.705 - 0.804	C
0.805 - 0.904	D
0.905 - 1.004	E
Over 1.005	F

Lost time for signal Yellow and All red intervals: 0.10 of V/C Ratio

NOTES:

EVAN BROOKS ASSOCIATES, PASADENA, CALIFORNIA

INTERSECTION CAPACITY UTILIZATION ANALYSIS

Location: Prairie Avenue and El Segundo Boulevard **City:** Hawthorne
Project No.: EBA2014-31 **Analyzed By:** MYR **File Name:** 2014-31-14 7

Problem Condition: Future 2035 Cumulative Traffic Volumes With Project
Proposed Geometric Configuration with Mitigation

Movement	Available Lanes		Peak Hour Volumes								Movement V/C Per Lane		Critical V/C	
			Existing		Other Proj.		Project		Study Vol.					
	No.	Cap.	AM	PM	AM	PM	AM	PM	AM	PM	AM	PM	AM	PM
N/B Left	2.0	2880	288	213	0	0	28	32	372	295	0.129	0.102		0.102
N/B Thru	3.0	4800	1222	851	0	0	0	0	1457	1052	0.303	0.219	0.303	
N/B Right	1.0	1600	126	126	0	0	0	0	150	156	0.025	0.027		
S/B Left	2.0	2880	202	298	0	0	0	2	241	370	0.084	0.129	0.084	
S/B Thru	4.0	6400	936	1185	0	0	0	0	1116	1465	0.192	0.246		0.246
S/B Right	0.0	0	93	88	0	0	3	0	113	109	0.000	0.000		
E/B Left	2.0	2880	166	139	0	0	10	2	208	174	0.072	0.060	0.072	
E/B Thru	3.0	4800	581	1283	0	0	34	114	726	1700	0.151	0.354		0.354
E/B Right	1.0	1600	171	248	0	0	13	44	217	350	0.020	0.127		
W/B Left	2.0	2880	169	182	0	0	19	0	220	225	0.076	0.078		0.078
W/B Thru	3.0	4800	1147	584	0	0	60	84	1427	805	0.297	0.168	0.297	
W/B Right	1.0	1600	311	266	0	0	0	0	371	329	0.156	0.090		
	ANALYSIS RESULTS :								Sum Of Critical V/C:				0.757	0.780
									Lost Time:				0.100	0.100
									Total V/C:				0.857	0.880
									Level Of Service:				D	D

ASSUMPTIONS AND METHODOLOGY

Existing Counts Year: 2015
Study Volume Year: 2020 (2035 for Cumulative)
Annual Growth Factor: 0.26 Percent

Lane Capacity
Single Through Lane = 1600 Vehicles Per Hour
Single Turn Lane = 1600 Vehicles Per Hour
Dual Turn Lane = 2880 Vehicles Per Hour

Level Of Service Definition

Total V/C	LOS
Under 0.605	A
0.605 - 0.704	B
0.705 - 0.804	C
0.805 - 0.904	D
0.905 - 1.004	E
Over 1.005	F

Lost time for signal Yellow and All red intervals: 0.10 of V/C Ratio

NOTES:

EVAN BROOKS ASSOCIATES, PASADENA, CALIFORNIA

INTERSECTION CAPACITY UTILIZATION ANALYSIS

Location: Prairie Avenue and Imperial Highway **City:** Hawthorne
Project No.: EBA2014-31 **Analyzed By:** MYR **File Name:** 2014-31-15 1

Problem Condition: Existing 2015 Traffic Conditions (Count Date: 2-19-15)
Existing Geometric Configuration

Movement	Available Lanes		Peak Hour Volumes								Movement V/C Per Lane		Critical V/C	
			Existing		Other Proj.		Project		Study Vol.					
	No.	Cap.	AM	PM	AM	PM	AM	PM	AM	PM	AM	PM	AM	PM
N/B Left	2.0	2880	393	190	0	0	0	0	393	190	0.136	0.066	0.136	0.066
N/B Thru	3.0	4800	597	550	0	0	0	0	597	550	0.155	0.155		
N/B Right	0.0	0	146	196	0	0	0	0	146	196	0.000	0.000		
S/B Left	2.0	2880	224	369	0	0	0	0	224	369	0.078	0.128		
S/B Thru	3.0	4800	808	1079	0	0	0	0	808	1079	0.168	0.225		
S/B Right	1.0	1600	916	573	0	0	0	0	916	573	0.502	0.235	0.502	0.235
E/B Left	1.0	1600	113	197	0	0	0	0	113	197	0.071	0.123	0.071	
E/B Thru	3.0	4800	365	1154	0	0	0	0	365	1154	0.090	0.277		0.277
E/B Right	0.0	0	66	174	0	0	0	0	66	174	0.000	0.000		
W/B Left	1.0	1600	300	267	0	0	0	0	300	267	0.188	0.167		0.167
W/B Thru	3.0	4800	1620	668	0	0	0	0	1620	668	0.365	0.178	0.365	
W/B Right	0.0	0	131	186	0	0	0	0	131	186	0.000	0.000		
	ANALYSIS RESULTS :								Sum Of Critical V/C:				1.074	0.745
									Lost Time:				0.100	0.100
									Total V/C:				1.174	0.845
									Level Of Service:				F	D

ASSUMPTIONS AND METHODOLOGY

Existing Counts Year: 2015
Study Volume Year: 2015
Annual Growth Factor: 0.26 Percent

Lane Capacity
Single Through Lane = 1600 Vehicles Per Hour
Single Turn Lane = 1600 Vehicles Per Hour
Dual Turn Lane = 2880 Vehicles Per Hour

Level Of Service Definition

Total V/C	LOS
Under 0.605	A
0.605 - 0.704	B
0.705 - 0.804	C
0.805 - 0.904	D
0.905 - 1.004	E
Over 1.005	F

Lost time for signal Yellow and All red intervals: 0.10 of V/C Ratio

NOTES:

EVAN BROOKS ASSOCIATES, PASADENA, CALIFORNIA

INTERSECTION CAPACITY UTILIZATION ANALYSIS

Location: Prairie Avenue and Imperial Highway **City:** Hawthorne
Project No.: EBA2014-31 **Analyzed By:** MYR **File Name:** 2014-31-15 2

Problem Condition: Future 2020 Traffic Volumes with Ambient Growth
Existing Geometric Configuration

Movement	Available Lanes		Peak Hour Volumes								Movement V/C Per Lane		Critical V/C	
			Existing		Other Proj.		Project		Study Vol.					
	No.	Cap.	AM	PM	AM	PM	AM	PM	AM	PM	AM	PM	AM	PM
N/B Left	2.0	2880	393	190	0	0	0	0	398	192	0.138	0.067	0.138	0.067
N/B Thru	3.0	4800	597	550	0	0	0	0	605	557	0.157	0.157		
N/B Right	0.0	0	146	196	0	0	0	0	148	199	0.000	0.000		
S/B Left	2.0	2880	224	369	0	0	0	0	227	374	0.079	0.130		
S/B Thru	3.0	4800	808	1079	0	0	0	0	819	1093	0.171	0.228		
S/B Right	1.0	1600	916	573	0	0	0	0	928	580	0.508	0.238	0.508	0.238
E/B Left	1.0	1600	113	197	0	0	0	0	114	200	0.072	0.125	0.072	
E/B Thru	3.0	4800	365	1154	0	0	0	0	370	1169	0.091	0.280		0.280
E/B Right	0.0	0	66	174	0	0	0	0	67	176	0.000	0.000		
W/B Left	1.0	1600	300	267	0	0	0	0	304	270	0.190	0.169		0.169
W/B Thru	3.0	4800	1620	668	0	0	0	0	1641	677	0.370	0.180	0.370	
W/B Right	0.0	0	131	186	0	0	0	0	133	188	0.000	0.000		
	ANALYSIS RESULTS :								Sum Of Critical V/C:				1.088	0.754
									Lost Time:				0.100	0.100
									Total V/C:				1.188	0.854
									Level Of Service:				F	D

ASSUMPTIONS AND METHODOLOGY

Existing Counts Year: 2015
Study Volume Year: 2020
Annual Growth Factor: 0.26 Percent

Lane Capacity
Single Through Lane = 1600 Vehicles Per Hour
Single Turn Lane = 1600 Vehicles Per Hour
Dual Turn Lane = 2880 Vehicles Per Hour

Level Of Service Definition

Total V/C	LOS
Under 0.605	A
0.605 - 0.704	B
0.705 - 0.804	C
0.805 - 0.904	D
0.905 - 1.004	E
Over 1.005	F

Lost time for signal Yellow and All red intervals: 0.10 of V/C Ratio

NOTES:

EVAN BROOKS ASSOCIATES, PASADENA, CALIFORNIA

INTERSECTION CAPACITY UTILIZATION ANALYSIS

Location: Prairie Avenue and Imperial Highway **City:** Hawthorne
Project No.: EBA2014-31 **Analyzed By:** MYR **File Name:** 2014-31-15 3

Problem Condition: Future 2020 Cumulative Traffic Volumes With Project
Existing Geometric Configuration

Movement	Available Lanes		Peak Hour Volumes								Movement V/C Per Lane		Critical V/C	
			Existing		Other Proj.		Project		Study Vol.					
	No.	Cap.	AM	PM	AM	PM	AM	PM	AM	PM	AM	PM	AM	PM
N/B Left	2.0	2880	393	190	0	0	0	0	398	192	0.138	0.067	0.138	0.067
N/B Thru	3.0	4800	597	550	0	0	19	57	624	614	0.161	0.169		
N/B Right	0.0	0	146	196	0	0	0	0	148	199	0.000	0.000		
S/B Left	2.0	2880	224	369	0	0	0	0	227	374	0.079	0.130		
S/B Thru	3.0	4800	808	1079	0	0	40	42	859	1135	0.179	0.237		
S/B Right	1.0	1600	916	573	0	0	62	63	990	643	0.547	0.277	0.547	0.277
E/B Left	1.0	1600	113	197	0	0	0	0	114	200	0.072	0.125	0.072	
E/B Thru	3.0	4800	365	1154	0	0	7	22	376	1191	0.092	0.285		0.285
E/B Right	0.0	0	66	174	0	0	0	0	67	176	0.000	0.000		
W/B Left	1.0	1600	300	267	0	0	0	0	304	270	0.190	0.169		0.169
W/B Thru	3.0	4800	1620	668	0	0	0	0	1641	677	0.370	0.180	0.370	
W/B Right	0.0	0	131	186	0	0	0	0	133	188	0.000	0.000		
	ANALYSIS RESULTS :								Sum Of Critical V/C:				1.126	0.798
									Lost Time:				0.100	0.100
									Total V/C:				1.226	0.898
									Level Of Service:				F	D

ASSUMPTIONS AND METHODOLOGY

Existing Counts Year: 2015
Study Volume Year: 2020
Annual Growth Factor: 0.26 Percent

Lane Capacity
Single Through Lane = 1600 Vehicles Per Hour
Single Turn Lane = 1600 Vehicles Per Hour
Dual Turn Lane = 2880 Vehicles Per Hour

Level Of Service Definition

Total V/C	LOS
Under 0.605	A
0.605 - 0.704	B
0.705 - 0.804	C
0.805 - 0.904	D
0.905 - 1.004	E
Over 1.005	F

Lost time for signal Yellow and All red intervals: 0.10 of V/C Ratio

NOTES:

EVAN BROOKS ASSOCIATES, PASADENA, CALIFORNIA

INTERSECTION CAPACITY UTILIZATION ANALYSIS

Location: Prairie Avenue and Imperial Highway **City:** Hawthorne
Project No.: EBA2014-31 **Analyzed By:** MYR **File Name:** 2014-31-15 5

Problem Condition: Future 2035 Cumulative Traffic Volumes Without Project
Existing Geometric Configuration

Movement	Available Lanes		Peak Hour Volumes								Movement V/C Per Lane		Critical V/C	
			Existing		Other Proj.		Project		Study Vol.					
	No.	Cap.	AM	PM	AM	PM	AM	PM	AM	PM	AM	PM	AM	PM
N/B Left	2.0	2880	393	190	0	0	0	0	468	235	0.163	0.082	0.163	0.082
N/B Thru	3.0	4800	597	550	0	0	0	0	712	680	0.185	0.192		
N/B Right	0.0	0	146	196	0	0	0	0	174	242	0.000	0.000		
S/B Left	2.0	2880	224	369	0	0	0	0	267	456	0.093	0.158		
S/B Thru	3.0	4800	808	1079	0	0	0	0	963	1334	0.201	0.278		
S/B Right	1.0	1600	916	573	0	0	0	0	1092	708	0.598	0.290	0.598	0.290
E/B Left	1.0	1600	113	197	0	0	0	0	135	243	0.084	0.152	0.084	
E/B Thru	3.0	4800	365	1154	0	0	0	0	435	1426	0.107	0.342		0.342
E/B Right	0.0	0	66	174	0	0	0	0	79	215	0.000	0.000		
W/B Left	1.0	1600	300	267	0	0	0	0	358	330	0.224	0.206		0.206
W/B Thru	3.0	4800	1620	668	0	0	0	0	1931	826	0.435	0.220	0.435	
W/B Right	0.0	0	131	186	0	0	0	0	156	230	0.000	0.000		
	ANALYSIS RESULTS :								Sum Of Critical V/C:				1.280	0.920
									Lost Time:				0.100	0.100
									Total V/C:				1.380	1.020
									Level Of Service:				F	F

ASSUMPTIONS AND METHODOLOGY

Existing Counts Year: 2015
Study Volume Year: 2020 (2035 for Cumulative)
Annual Growth Factor: 0.26 Percent

Lane Capacity
Single Through Lane = 1600 Vehicles Per Hour
Single Turn Lane = 1600 Vehicles Per Hour
Dual Turn Lane = 2880 Vehicles Per Hour

Level Of Service Definition

Total V/C	LOS
Under 0.605	A
0.605 - 0.704	B
0.705 - 0.804	C
0.805 - 0.904	D
0.905 - 1.004	E
Over 1.005	F

Lost time for signal Yellow and All red intervals: 0.10 of V/C Ratio

NOTES:

EVAN BROOKS ASSOCIATES, PASADENA, CALIFORNIA

INTERSECTION CAPACITY UTILIZATION ANALYSIS

Location: Prairie Avenue and Imperial Highway **City:** Hawthorne
Project No.: EBA2014-31 **Analyzed By:** MYR **File Name:** 2014-31-15 4

Problem Condition: Future 2035 Cumulative Traffic Volumes With Project
Existing Geometric Configuration

Movement	Available Lanes		Peak Hour Volumes								Movement V/C Per Lane		Critical V/C	
			Existing		Other Proj.		Project		Study Vol.					
	No.	Cap.	AM	PM	AM	PM	AM	PM	AM	PM	AM	PM	AM	PM
N/B Left	2.0	2880	393	190	0	0	0	0	468	235	0.163	0.082	0.163	0.082
N/B Thru	3.0	4800	597	550	0	0	19	57	731	737	0.188	0.204		
N/B Right	0.0	0	146	196	0	0	0	0	174	242	0.000	0.000		
S/B Left	2.0	2880	224	369	0	0	0	0	267	456	0.093	0.158		
S/B Thru	3.0	4800	808	1079	0	0	40	42	1003	1376	0.209	0.287		
S/B Right	1.0	1600	916	573	0	0	62	63	1154	771	0.637	0.330	0.637	0.330
E/B Left	1.0	1600	113	197	0	0	0	0	135	243	0.084	0.152	0.084	
E/B Thru	3.0	4800	365	1154	0	0	7	22	442	1448	0.108	0.346		0.346
E/B Right	0.0	0	66	174	0	0	0	0	79	215	0.000	0.000		
W/B Left	1.0	1600	300	267	0	0	0	0	358	330	0.224	0.206		0.206
W/B Thru	3.0	4800	1620	668	0	0	0	0	1931	826	0.435	0.220	0.435	
W/B Right	0.0	0	131	186	0	0	0	0	156	230	0.000	0.000		
	ANALYSIS RESULTS :								Sum Of Critical V/C:				1.319	0.964
									Lost Time:				0.100	0.100
									Total V/C:				1.419	1.064
									Level Of Service:				F	F

ASSUMPTIONS AND METHODOLOGY

Existing Counts Year: 2015
Study Volume Year: 2020 (2035 for Cumulative)
Annual Growth Factor: 0.26 Percent

Lane Capacity
Single Through Lane = 1600 Vehicles Per Hour
Single Turn Lane = 1600 Vehicles Per Hour
Dual Turn Lane = 2880 Vehicles Per Hour

Level Of Service Definition

Total V/C	LOS
Under 0.605	A
0.605 - 0.704	B
0.705 - 0.804	C
0.805 - 0.904	D
0.905 - 1.004	E
Over 1.005	F

Lost time for signal Yellow and All red intervals: 0.10 of V/C Ratio

NOTES:

EVAN BROOKS ASSOCIATES, PASADENA, CALIFORNIA

INTERSECTION CAPACITY UTILIZATION ANALYSIS

Location: Prairie Avenue and Imperial Highway **City:** Hawthorne
Project No.: EBA2014-31 **Analyzed By:** MYR **File Name:** 2014-31-15 6

Problem Condition: Future 2020 Cumulative Traffic Volumes With Project
Proposed Geometric Configuration with Mitigation

Movement	Available Lanes		Peak Hour Volumes								Movement V/C Per Lane		Critical V/C	
			Existing		Other Proj.		Project		Study Vol.					
	No.	Cap.	AM	PM	AM	PM	AM	PM	AM	PM	AM	PM	AM	PM
N/B Left	2.0	2880	393	190	0	0	0	0	398	192	0.138	0.067	0.138	0.067
N/B Thru	3.0	4800	597	550	0	0	19	57	624	614	0.161	0.169		
N/B Right	0.0	0	146	196	0	0	0	0	148	199	0.000	0.000		
S/B Left	2.0	2880	224	369	0	0	0	0	227	374	0.079	0.130		
S/B Thru	3.0	4800	808	1079	0	0	40	42	859	1135	0.179	0.237	0.179	0.237
S/B Right	2.0	2880	916	573	0	0	62	63	990	643	0.132	0.042		
E/B Left	1.0	1600	113	197	0	0	0	0	114	200	0.072	0.125	0.072	
E/B Thru	3.0	4800	365	1154	0	0	7	22	376	1191	0.092	0.285		0.285
E/B Right	0.0	0	66	174	0	0	0	0	67	176	0.000	0.000		
W/B Left	1.0	1600	300	267	0	0	0	0	304	270	0.190	0.169		0.169
W/B Thru	3.0	4800	1620	668	0	0	0	0	1641	677	0.370	0.180	0.370	
W/B Right	0.0	0	131	186	0	0	0	0	133	188	0.000	0.000		
	ANALYSIS RESULTS :								Sum Of Critical V/C:				0.758	0.757
									Lost Time:				0.100	0.100
									Total V/C:				0.858	0.857
									Level Of Service:				D	D

ASSUMPTIONS AND METHODOLOGY

Existing Counts Year: 2015
Study Volume Year: 2020
Annual Growth Factor: 0.26 Percent

Lane Capacity
Single Through Lane = 1600 Vehicles Per Hour
Single Turn Lane = 1600 Vehicles Per Hour
Dual Turn Lane = 2880 Vehicles Per Hour

Level Of Service Definition

Total V/C	LOS
Under 0.605	A
0.605 - 0.704	B
0.705 - 0.804	C
0.805 - 0.904	D
0.905 - 1.004	E
Over 1.005	F

Lost time for signal Yellow and All red intervals: 0.10 of V/C Ratio

NOTES:

EVAN BROOKS ASSOCIATES, PASADENA, CALIFORNIA

INTERSECTION CAPACITY UTILIZATION ANALYSIS

Location: Prairie Avenue and Imperial Highway **City:** Hawthorne
Project No.: EBA2014-31 **Analyzed By:** MYR **File Name:** 2014-31-15 7

Problem Condition: Future 2035 Cumulative Traffic Volumes With Project
Proposed Geometric Configuration with Mitigation

Movement	Available Lanes		Peak Hour Volumes								Movement V/C Per Lane		Critical V/C	
			Existing		Other Proj.		Project		Study Vol.					
	No.	Cap.	AM	PM	AM	PM	AM	PM	AM	PM	AM	PM	AM	PM
N/B Left	2.0	2880	393	190	0	0	0	0	468	235	0.163	0.082	0.163	0.082
N/B Thru	3.0	4800	597	550	0	0	19	57	731	737	0.188	0.204		
N/B Right	0.0	0	146	196	0	0	0	0	174	242	0.000	0.000		
S/B Left	2.0	2880	224	369	0	0	0	0	267	456	0.093	0.158		
S/B Thru	3.0	4800	808	1079	0	0	40	42	1003	1376	0.209	0.287	0.209	0.287
S/B Right	2.0	2880	916	573	0	0	62	63	1154	771	0.154	0.049		
E/B Left	1.0	1600	113	197	0	0	0	0	135	243	0.084	0.152	0.084	
E/B Thru	4.0	6400	365	1154	0	0	7	22	442	1448	0.081	0.260		0.260
E/B Right	0.0	0	66	174	0	0	0	0	79	215	0.000	0.000		
W/B Left	2.0	2880	300	267	0	0	0	0	358	330	0.124	0.115		0.115
W/B Thru	4.0	6400	1620	668	0	0	0	0	1931	826	0.326	0.165	0.326	
W/B Right	0.0	0	131	186	0	0	0	0	156	230	0.000	0.000		
	ANALYSIS RESULTS :								Sum Of Critical V/C:				0.782	0.743
									Lost Time:				0.100	0.100
									Total V/C:				0.882	0.843
									Level Of Service:				D	D

ASSUMPTIONS AND METHODOLOGY

Existing Counts Year: 2015
Study Volume Year: 2020 (2035 for Cumulative)
Annual Growth Factor: 0.26 Percent

Lane Capacity
Single Through Lane = 1600 Vehicles Per Hour
Single Turn Lane = 1600 Vehicles Per Hour
Dual Turn Lane = 2880 Vehicles Per Hour

Level Of Service Definition

Total V/C	LOS
Under 0.605	A
0.605 - 0.704	B
0.705 - 0.804	C
0.805 - 0.904	D
0.905 - 1.004	E
Over 1.005	F

Lost time for signal Yellow and All red intervals: 0.10 of V/C Ratio

NOTES:

EVAN BROOKS ASSOCIATES, PASADENA, CALIFORNIA

INTERSECTION CAPACITY UTILIZATION ANALYSIS

Location: Prairie Avenue and I-105 EB Off-ramp **City:** Hawthorne
Project No.: EBA2014-31 **Analyzed By:** MYR **File Name:** 2014-31-16 1

Problem Condition: Existing 2015 Traffic Conditions (Count Date: 6-11-15)
Existing Geometric Configuration

Movement	Available Lanes		Peak Hour Volumes								Movement V/C Per Lane		Critical V/C	
			Existing		Other Proj.		Project		Study Vol.					
	No.	Cap.	AM	PM	AM	PM	AM	PM	AM	PM	AM	PM	AM	PM
N/B Left	0.0	0	0	0	0	0	0	0	0	0	0.000	0.000	0.000	0.000
N/B Thru	3.0	4800	873	841	0	0	0	0	873	841	0.185	0.182		
N/B Right	0.0	0	15	32	0	0	0	0	15	32	0.000	0.000		
S/B Left	1.0	1600	25	34	0	0	0	0	25	34	0.016	0.021		
S/B Thru	3.0	4800	1426	1383	0	0	0	0	1426	1383	0.297	0.288	0.297	0.288
S/B Right	0.0	0	0	0	0	0	0	0	0	0	0.000	0.000		
E/B Left	2.0	2880	289	587	0	0	0	0	289	587	0.100	0.204		
E/B Thru	0.0	0	0	0	0	0	0	0	0	0	0.000	0.000		
E/B Right	1.0	1600	299	495	0	0	0	0	299	495	0.187	0.309	0.187	0.309
W/B Left	0.0	0	0	0	0	0	0	0	0	0	0.000	0.000	0.000	0.000
W/B Thru	1.0	1600	0	0	0	0	0	0	0	0	0.000	0.000		
W/B Right	0.0	0	0	0	0	0	0	0	0	0	0.000	0.000		
	ANALYSIS RESULTS :								Sum Of Critical V/C:				0.484	0.598
									Lost Time:				0.100	0.100
									Total V/C:				0.584	0.698
									Level Of Service:				A	B

ASSUMPTIONS AND METHODOLOGY

Existing Counts Year: 2015
Study Volume Year: 2015
Annual Growth Factor: 0.26 Percent

Lane Capacity
Single Through Lane = 1600 Vehicles Per Hour
Single Turn Lane = 1600 Vehicles Per Hour
Dual Turn Lane = 2880 Vehicles Per Hour

Level Of Service Definition

Total V/C	LOS
Under 0.605	A
0.605 - 0.704	B
0.705 - 0.804	C
0.805 - 0.904	D
0.905 - 1.004	E
Over 1.005	F

Lost time for signal Yellow and All red intervals: 0.10 of V/C Ratio

NOTES:

EVAN BROOKS ASSOCIATES, PASADENA, CALIFORNIA

INTERSECTION CAPACITY UTILIZATION ANALYSIS

Location: Prairie Avenue and I-105 EB Off-ramp **City:** Hawthorne
Project No.: EBA2014-31 **Analyzed By:** MYR **File Name:** 2014-31-16 2

Problem Condition: Future 2020 Traffic Volumes with Ambient Growth
Existing Geometric Configuration

Movement	Available Lanes		Peak Hour Volumes								Movement V/C Per Lane		Critical V/C	
			Existing		Other Proj.		Project		Study Vol.					
	No.	Cap.	AM	PM	AM	PM	AM	PM	AM	PM	AM	PM	AM	PM
N/B Left	0.0	0	0	0	0	0	0	0	0	0	0.000	0.000	0.000	0.000
N/B Thru	3.0	4800	873	841	0	0	0	0	884	852	0.187	0.184		
N/B Right	0.0	0	15	32	0	0	0	0	15	32	0.000	0.000		
S/B Left	1.0	1600	25	34	0	0	0	0	25	34	0.016	0.022		
S/B Thru	3.0	4800	1426	1383	0	0	0	0	1445	1401	0.301	0.292	0.301	0.292
S/B Right	0.0	0	0	0	0	0	0	0	0	0	0.000	0.000		
E/B Left	2.0	2880	289	587	0	0	0	0	293	595	0.102	0.206		
E/B Thru	0.0	0	0	0	0	0	0	0	0	0	0.000	0.000		
E/B Right	1.0	1600	299	495	0	0	0	0	303	501	0.189	0.313	0.189	0.313
W/B Left	0.0	0	0	0	0	0	0	0	0	0	0.000	0.000	0.000	0.000
W/B Thru	1.0	1600	0	0	0	0	0	0	0	0	0.000	0.000		
W/B Right	0.0	0	0	0	0	0	0	0	0	0	0.000	0.000		
	ANALYSIS RESULTS :								Sum Of Critical V/C:				0.490	0.605
									Lost Time:				0.100	0.100
									Total V/C:				0.590	0.705
									Level Of Service:				A	C

ASSUMPTIONS AND METHODOLOGY

Existing Counts Year: 2015
Study Volume Year: 2020
Annual Growth Factor: 0.26 Percent

Lane Capacity
Single Through Lane = 1600 Vehicles Per Hour
Single Turn Lane = 1600 Vehicles Per Hour
Dual Turn Lane = 2880 Vehicles Per Hour

Level Of Service Definition

Total V/C	LOS
Under 0.605	A
0.605 - 0.704	B
0.705 - 0.804	C
0.805 - 0.904	D
0.905 - 1.004	E
Over 1.005	F

Lost time for signal Yellow and All red intervals: 0.10 of V/C Ratio

NOTES:

EVAN BROOKS ASSOCIATES, PASADENA, CALIFORNIA

INTERSECTION CAPACITY UTILIZATION ANALYSIS

Location: Prairie Avenue and I-105 EB Off-ramp **City:** Hawthorne
Project No.: EBA2014-31 **Analyzed By:** MYR **File Name:** 2014-31-16 3

Problem Condition: Future 2020 Cumulative Traffic Volumes With Project
Existing Geometric Configuration

Movement	Available Lanes		Peak Hour Volumes								Movement V/C Per Lane		Critical V/C	
			Existing		Other Proj.		Project		Study Vol.					
	No.	Cap.	AM	PM	AM	PM	AM	PM	AM	PM	AM	PM	AM	PM
N/B Left	0.0	0	0	0	0	0	0	0	0	0	0.000	0.000	0.000	0.000
N/B Thru	3.0	4800	873	841	0	0	19	57	903	909	0.191	0.196		
N/B Right	0.0	0	15	32	0	0	0	0	15	32	0.000	0.000		
S/B Left	1.0	1600	25	34	0	0	0	0	25	34	0.016	0.022		
S/B Thru	3.0	4800	1426	1383	0	0	40	42	1485	1443	0.309	0.301	0.309	0.301
S/B Right	0.0	0	0	0	0	0	0	0	0	0	0.000	0.000		
E/B Left	2.0	2880	289	587	0	0	0	0	293	595	0.102	0.206		
E/B Thru	0.0	0	0	0	0	0	0	0	0	0	0.000	0.000		
E/B Right	1.0	1600	299	495	0	0	62	63	365	564	0.228	0.353	0.228	0.353
W/B Left	0.0	0	0	0	0	0	0	0	0	0	0.000	0.000	0.000	0.000
W/B Thru	1.0	1600	0	0	0	0	0	0	0	0	0.000	0.000		
W/B Right	0.0	0	0	0	0	0	0	0	0	0	0.000	0.000		
	ANALYSIS RESULTS :								Sum Of Critical V/C:				0.537	0.653
									Lost Time:				0.100	0.100
									Total V/C:				0.637	0.753
									Level Of Service:				B	C

ASSUMPTIONS AND METHODOLOGY

Existing Counts Year: 2015
Study Volume Year: 2020
Annual Growth Factor: 0.26 Percent

Lane Capacity
Single Through Lane = 1600 Vehicles Per Hour
Single Turn Lane = 1600 Vehicles Per Hour
Dual Turn Lane = 2880 Vehicles Per Hour

Level Of Service Definition

Total V/C	LOS
Under 0.605	A
0.605 - 0.704	B
0.705 - 0.804	C
0.805 - 0.904	D
0.905 - 1.004	E
Over 1.005	F

Lost time for signal Yellow and All red intervals: 0.10 of V/C Ratio

NOTES:

EVAN BROOKS ASSOCIATES, PASADENA, CALIFORNIA

INTERSECTION CAPACITY UTILIZATION ANALYSIS

Location: Prairie Avenue and I-105 EB Off-ramp **City:** Hawthorne
Project No.: EBA2014-31 **Analyzed By:** MYR **File Name:** 2014-31-16 5

Problem Condition: Future 2035 Cumulative Traffic Volumes Without Project
Existing Geometric Configuration

Movement	Available Lanes		Peak Hour Volumes								Movement V/C Per Lane		Critical V/C	
			Existing		Other Proj.		Project		Study Vol.					
	No.	Cap.	AM	PM	AM	PM	AM	PM	AM	PM	AM	PM	AM	PM
N/B Left	0.0	0	0	0	0	0	0	0	0	0	0.000	0.000	0.000	0.000
N/B Thru	3.0	4800	873	841	0	0	0	0	1041	1039	0.221	0.225		
N/B Right	0.0	0	15	32	0	0	0	0	18	40	0.000	0.000		
S/B Left	1.0	1600	25	34	0	0	0	0	30	42	0.019	0.026		
S/B Thru	3.0	4800	1426	1383	0	0	0	0	1700	1709	0.354	0.356	0.354	0.356
S/B Right	0.0	0	0	0	0	0	0	0	0	0	0.000	0.000		
E/B Left	2.0	2880	289	587	0	0	0	0	344	726	0.120	0.252		
E/B Thru	0.0	0	0	0	0	0	0	0	0	0	0.000	0.000		
E/B Right	1.0	1600	299	495	0	0	0	0	356	612	0.223	0.382	0.223	0.382
W/B Left	0.0	0	0	0	0	0	0	0	0	0	0.000	0.000	0.000	0.000
W/B Thru	1.0	1600	0	0	0	0	0	0	0	0	0.000	0.000		
W/B Right	0.0	0	0	0	0	0	0	0	0	0	0.000	0.000		
	ANALYSIS RESULTS :								Sum Of Critical V/C:				0.577	0.739
									Lost Time:				0.100	0.100
									Total V/C:				0.677	0.839
									Level Of Service:				B	D

ASSUMPTIONS AND METHODOLOGY

Existing Counts Year: 2015
Study Volume Year: 2020 (2035 for Cumulative)
Annual Growth Factor: 0.26 Percent

Lane Capacity
Single Through Lane = 1600 Vehicles Per Hour
Single Turn Lane = 1600 Vehicles Per Hour
Dual Turn Lane = 2880 Vehicles Per Hour

Level Of Service Definition

Total V/C	LOS
Under 0.605	A
0.605 - 0.704	B
0.705 - 0.804	C
0.805 - 0.904	D
0.905 - 1.004	E
Over 1.005	F

Lost time for signal Yellow and All red intervals: 0.10 of V/C Ratio

NOTES:

EVAN BROOKS ASSOCIATES, PASADENA, CALIFORNIA

INTERSECTION CAPACITY UTILIZATION ANALYSIS

Location: Prairie Avenue and I-105 EB Off-ramp **City:** Hawthorne
Project No.: EBA2014-31 **Analyzed By:** MYR **File Name:** 2014-31-16 4

Problem Condition: Future 2035 Cumulative Traffic Volumes With Project
Existing Geometric Configuration

Movement	Available Lanes		Peak Hour Volumes								Movement V/C Per Lane		Critical V/C	
			Existing		Other Proj.		Project		Study Vol.					
	No.	Cap.	AM	PM	AM	PM	AM	PM	AM	PM	AM	PM	AM	PM
N/B Left	0.0	0	0	0	0	0	0	0	0	0	0.000	0.000	0.000	0.000
N/B Thru	3.0	4800	873	841	0	0	19	57	1060	1097	0.224	0.237		
N/B Right	0.0	0	15	32	0	0	0	0	18	40	0.000	0.000		
S/B Left	1.0	1600	25	34	0	0	0	0	30	42	0.019	0.026		
S/B Thru	3.0	4800	1426	1383	0	0	40	42	1740	1752	0.362	0.365	0.362	0.365
S/B Right	0.0	0	0	0	0	0	0	0	0	0	0.000	0.000		
E/B Left	2.0	2880	289	587	0	0	0	0	344	726	0.120	0.252		
E/B Thru	0.0	0	0	0	0	0	0	0	0	0	0.000	0.000		
E/B Right	1.0	1600	299	495	0	0	62	63	418	674	0.261	0.422	0.261	0.422
W/B Left	0.0	0	0	0	0	0	0	0	0	0	0.000	0.000	0.000	0.000
W/B Thru	1.0	1600	0	0	0	0	0	0	0	0	0.000	0.000		
W/B Right	0.0	0	0	0	0	0	0	0	0	0	0.000	0.000		
	ANALYSIS RESULTS :								Sum Of Critical V/C:				0.624	0.786
									Lost Time:				0.100	0.100
									Total V/C:				0.724	0.886
									Level Of Service:				C	D

ASSUMPTIONS AND METHODOLOGY

Existing Counts Year: 2015
Study Volume Year: 2020 (2035 for Cumulative)
Annual Growth Factor: 0.26 Percent

Lane Capacity
Single Through Lane = 1600 Vehicles Per Hour
Single Turn Lane = 1600 Vehicles Per Hour
Dual Turn Lane = 2880 Vehicles Per Hour

Level Of Service Definition

Total V/C	LOS
Under 0.605	A
0.605 - 0.704	B
0.705 - 0.804	C
0.805 - 0.904	D
0.905 - 1.004	E
Over 1.005	F

Lost time for signal Yellow and All red intervals: 0.10 of V/C Ratio

NOTES:

EVAN BROOKS ASSOCIATES, PASADENA, CALIFORNIA

INTERSECTION CAPACITY UTILIZATION ANALYSIS

Location: Imperial Highway and I-105 EB On-ramp **City:** Hawthorne
Project No.: EBA2014-31 **Analyzed By:** MYR **File Name:** 2014-31-17 1

Problem Condition: Existing 2015 Traffic Conditions (Count Date: 6-11-15)
Existing Geometric Configuration

Movement	Available Lanes		Peak Hour Volumes								Movement V/C Per Lane		Critical V/C	
			Existing		Other Proj.		Project		Study Vol.					
	No.	Cap.	AM	PM	AM	PM	AM	PM	AM	PM	AM	PM	AM	PM
N/B Left	0.0	0	43	25	0	0	0	0	43	25	0.000	0.000		
N/B Thru	1.0	1600	74	189	0	0	0	0	74	189	0.087	0.164	0.087	0.164
N/B Right	0.0	0	22	49	0	0	0	0	22	49	0.000	0.000		
S/B Left	0.0	0	0	0	0	0	0	0	0	0	0.000	0.000	0.000	0.000
S/B Thru	0.0	0	0	0	0	0	0	0	0	0	0.000	0.000		
S/B Right	0.0	0	0	0	0	0	0	0	0	0	0.000	0.000		
E/B Left	1.0	1600	279	630	0	0	0	0	279	630	0.174	0.394	0.174	0.394
E/B Thru	3.0	4800	440	1468	0	0	0	0	440	1468	0.095	0.314		
E/B Right	0.0	0	14	37	0	0	0	0	14	37	0.000	0.000		
W/B Left	1.0	1600	21	40	0	0	0	0	21	40	0.013	0.025		
W/B Thru	3.0	4800	1193	558	0	0	0	0	1193	558	0.249	0.116	0.249	
W/B Right	1.0	1600	371	287	0	0	0	0	371	287	0.232	0.179		0.179
	ANALYSIS RESULTS :								Sum Of Critical V/C:				0.510	0.738
									Lost Time:				0.100	0.100
									Total V/C:				0.610	0.838
									Level Of Service:				B	D

ASSUMPTIONS AND METHODOLOGY

Existing Counts Year: 2015
Study Volume Year: 2015
Annual Growth Factor: 0.26 Percent

Lane Capacity
Single Through Lane = 1600 Vehicles Per Hour
Single Turn Lane = 1600 Vehicles Per Hour
Dual Turn Lane = 2880 Vehicles Per Hour

Level Of Service Definition

Total V/C	LOS
Under 0.605	A
0.605 - 0.704	B
0.705 - 0.804	C
0.805 - 0.904	D
0.905 - 1.004	E
Over 1.005	F

Lost time for signal Yellow and All red intervals: 0.10 of V/C Ratio

NOTES:

EVAN BROOKS ASSOCIATES, PASADENA, CALIFORNIA

INTERSECTION CAPACITY UTILIZATION ANALYSIS

Location: Imperial Highway and I-105 EB On-ramp **City:** Hawthorne
Project No.: EBA2014-31 **Analyzed By:** MYR **File Name:** 2014-31-17 2

Problem Condition: Future 2020 Traffic Volumes with Ambient Growth
Existing Geometric Configuration

Movement	Available Lanes		Peak Hour Volumes								Movement V/C Per Lane		Critical V/C	
			Existing		Other Proj.		Project		Study Vol.					
	No.	Cap.	AM	PM	AM	PM	AM	PM	AM	PM	AM	PM	AM	PM
N/B Left	0.0	0	43	25	0	0	0	0	44	25	0.000	0.000		
N/B Thru	1.0	1600	74	189	0	0	0	0	75	191	0.088	0.167	0.088	0.167
N/B Right	0.0	0	22	49	0	0	0	0	22	50	0.000	0.000		
S/B Left	0.0	0	0	0	0	0	0	0	0	0	0.000	0.000	0.000	0.000
S/B Thru	0.0	0	0	0	0	0	0	0	0	0	0.000	0.000		
S/B Right	0.0	0	0	0	0	0	0	0	0	0	0.000	0.000		
E/B Left	1.0	1600	279	630	0	0	0	0	283	638	0.177	0.399	0.177	0.399
E/B Thru	3.0	4800	440	1468	0	0	0	0	446	1487	0.096	0.318		
E/B Right	0.0	0	14	37	0	0	0	0	14	37	0.000	0.000		
W/B Left	1.0	1600	21	40	0	0	0	0	21	41	0.013	0.025		
W/B Thru	3.0	4800	1193	558	0	0	0	0	1209	565	0.252	0.118	0.252	
W/B Right	1.0	1600	371	287	0	0	0	0	376	291	0.235	0.182		0.182
	ANALYSIS RESULTS :								Sum Of Critical V/C:				0.516	0.747
									Lost Time:				0.100	0.100
									Total V/C:				0.616	0.847
									Level Of Service:				B	D

ASSUMPTIONS AND METHODOLOGY

Existing Counts Year: 2015
Study Volume Year: 2020
Annual Growth Factor: 0.26 Percent

Lane Capacity
Single Through Lane = 1600 Vehicles Per Hour
Single Turn Lane = 1600 Vehicles Per Hour
Dual Turn Lane = 2880 Vehicles Per Hour

Level Of Service Definition

Total V/C	LOS
Under 0.605	A
0.605 - 0.704	B
0.705 - 0.804	C
0.805 - 0.904	D
0.905 - 1.004	E
Over 1.005	F

Lost time for signal Yellow and All red intervals: 0.10 of V/C Ratio

NOTES:

EVAN BROOKS ASSOCIATES, PASADENA, CALIFORNIA

INTERSECTION CAPACITY UTILIZATION ANALYSIS

Location: Imperial Highway and I-105 EB On-ramp **City:** Hawthorne
Project No.: EBA2014-31 **Analyzed By:** MYR **File Name:** 2014-31-17 3

Problem Condition: Future 2020 Cumulative Traffic Volumes With Project
Existing Geometric Configuration

Movement	Available Lanes		Peak Hour Volumes								Movement V/C Per Lane		Critical V/C	
			Existing		Other Proj.		Project		Study Vol.					
	No.	Cap.	AM	PM	AM	PM	AM	PM	AM	PM	AM	PM	AM	PM
N/B Left	0.0	0	43	25	0	0	0	0	44	25	0.000	0.000		
N/B Thru	1.0	1600	74	189	0	0	0	0	75	191	0.088	0.167	0.088	0.167
N/B Right	0.0	0	22	49	0	0	0	0	22	50	0.000	0.000		
S/B Left	0.0	0	0	0	0	0	0	0	0	0	0.000	0.000	0.000	0.000
S/B Thru	0.0	0	0	0	0	0	0	0	0	0	0.000	0.000		
S/B Right	0.0	0	0	0	0	0	0	0	0	0	0.000	0.000		
E/B Left	1.0	1600	279	630	0	0	24	64	306	702	0.192	0.439	0.192	0.439
E/B Thru	3.0	4800	440	1468	0	0	7	22	452	1509	0.097	0.322		
E/B Right	0.0	0	14	37	0	0	0	0	14	37	0.000	0.000		
W/B Left	1.0	1600	21	40	0	0	0	0	21	41	0.013	0.025		
W/B Thru	3.0	4800	1193	558	0	0	62	63	1270	628	0.265	0.131	0.265	
W/B Right	1.0	1600	371	287	0	0	0	0	376	291	0.235	0.182		0.182
	ANALYSIS RESULTS :								Sum Of Critical V/C:				0.544	0.787
									Lost Time:				0.100	0.100
									Total V/C:				0.644	0.887
									Level Of Service:				B	D

ASSUMPTIONS AND METHODOLOGY

Existing Counts Year: 2015
Study Volume Year: 2020
Annual Growth Factor: 0.26 Percent

Lane Capacity
Single Through Lane = 1600 Vehicles Per Hour
Single Turn Lane = 1600 Vehicles Per Hour
Dual Turn Lane = 2880 Vehicles Per Hour

Level Of Service Definition

Total V/C	LOS
Under 0.605	A
0.605 - 0.704	B
0.705 - 0.804	C
0.805 - 0.904	D
0.905 - 1.004	E
Over 1.005	F

Lost time for signal Yellow and All red intervals: 0.10 of V/C Ratio

NOTES:

EVAN BROOKS ASSOCIATES, PASADENA, CALIFORNIA

INTERSECTION CAPACITY UTILIZATION ANALYSIS

Location: Imperial Highway and I-105 EB On-ramp **City:** Hawthorne
Project No.: EBA2014-31 **Analyzed By:** MYR **File Name:** 2014-31-17 5

Problem Condition: Future 2035 Cumulative Traffic Volumes Without Project
Existing Geometric Configuration

Movement	Available Lanes		Peak Hour Volumes								Movement V/C Per Lane		Critical V/C	
			Existing		Other Proj.		Project		Study Vol.					
	No.	Cap.	AM	PM	AM	PM	AM	PM	AM	PM	AM	PM	AM	PM
N/B Left	0.0	0	43	25	0	0	0	0	51	31	0.000	0.000		
N/B Thru	1.0	1600	74	189	0	0	0	0	88	234	0.104	0.203	0.104	0.203
N/B Right	0.0	0	22	49	0	0	0	0	26	61	0.000	0.000		
S/B Left	0.0	0	0	0	0	0	0	0	0	0	0.000	0.000	0.000	0.000
S/B Thru	0.0	0	0	0	0	0	0	0	0	0	0.000	0.000		
S/B Right	0.0	0	0	0	0	0	0	0	0	0	0.000	0.000		
E/B Left	1.0	1600	279	630	0	0	0	0	333	779	0.208	0.487	0.208	0.487
E/B Thru	3.0	4800	440	1468	0	0	0	0	524	1814	0.113	0.388		
E/B Right	0.0	0	14	37	0	0	0	0	17	46	0.000	0.000		
W/B Left	1.0	1600	21	40	0	0	0	0	25	49	0.016	0.031		
W/B Thru	3.0	4800	1193	558	0	0	0	0	1422	690	0.296	0.144	0.296	
W/B Right	1.0	1600	371	287	0	0	0	0	442	355	0.276	0.222		0.222
	ANALYSIS RESULTS :								Sum Of Critical V/C:				0.608	0.912
									Lost Time:				0.100	0.100
									Total V/C:				0.708	1.012
									Level Of Service:				C	F

ASSUMPTIONS AND METHODOLOGY

Existing Counts Year: 2015
Study Volume Year: 2020 (2035 for Cumulative)
Annual Growth Factor: 0.26 Percent

Lane Capacity
Single Through Lane = 1600 Vehicles Per Hour
Single Turn Lane = 1600 Vehicles Per Hour
Dual Turn Lane = 2880 Vehicles Per Hour

Level Of Service Definition

Total V/C	LOS
Under 0.605	A
0.605 - 0.704	B
0.705 - 0.804	C
0.805 - 0.904	D
0.905 - 1.004	E
Over 1.005	F

Lost time for signal Yellow and All red intervals: 0.10 of V/C Ratio

NOTES:

EVAN BROOKS ASSOCIATES, PASADENA, CALIFORNIA

INTERSECTION CAPACITY UTILIZATION ANALYSIS

Location: Imperial Highway and I-105 EB On-ramp **City:** Hawthorne
Project No.: EBA2014-31 **Analyzed By:** MYR **File Name:** 2014-31-17 4

Problem Condition: Future 2035 Cumulative Traffic Volumes With Project
Existing Geometric Configuration

Movement	Available Lanes		Peak Hour Volumes								Movement V/C Per Lane		Critical V/C	
			Existing		Other Proj.		Project		Study Vol.					
	No.	Cap.	AM	PM	AM	PM	AM	PM	AM	PM	AM	PM	AM	PM
N/B Left	0.0	0	43	25	0	0	0	0	51	31	0.000	0.000		
N/B Thru	1.0	1600	74	189	0	0	0	0	88	234	0.104	0.203	0.104	0.203
N/B Right	0.0	0	22	49	0	0	0	0	26	61	0.000	0.000		
S/B Left	0.0	0	0	0	0	0	0	0	0	0	0.000	0.000	0.000	0.000
S/B Thru	0.0	0	0	0	0	0	0	0	0	0	0.000	0.000		
S/B Right	0.0	0	0	0	0	0	0	0	0	0	0.000	0.000		
E/B Left	1.0	1600	279	630	0	0	24	64	356	843	0.223	0.527	0.223	0.527
E/B Thru	3.0	4800	440	1468	0	0	7	22	531	1836	0.114	0.392		
E/B Right	0.0	0	14	37	0	0	0	0	17	46	0.000	0.000		
W/B Left	1.0	1600	21	40	0	0	0	0	25	49	0.016	0.031		
W/B Thru	3.0	4800	1193	558	0	0	62	63	1484	752	0.309	0.157	0.309	
W/B Right	1.0	1600	371	287	0	0	0	0	442	355	0.276	0.222		0.222
	ANALYSIS RESULTS :								Sum Of Critical V/C:				0.635	0.952
									Lost Time:				0.100	0.100
									Total V/C:				0.735	1.052
									Level Of Service:				C	F

ASSUMPTIONS AND METHODOLOGY

Existing Counts Year: 2015
Study Volume Year: 2020 (2035 for Cumulative)
Annual Growth Factor: 0.26 Percent

Lane Capacity
Single Through Lane = 1600 Vehicles Per Hour
Single Turn Lane = 1600 Vehicles Per Hour
Dual Turn Lane = 2880 Vehicles Per Hour

Level Of Service Definition

Total V/C	LOS
Under 0.605	A
0.605 - 0.704	B
0.705 - 0.804	C
0.805 - 0.904	D
0.905 - 1.004	E
Over 1.005	F

Lost time for signal Yellow and All red intervals: 0.10 of V/C Ratio

NOTES:

EVAN BROOKS ASSOCIATES, PASADENA, CALIFORNIA

INTERSECTION CAPACITY UTILIZATION ANALYSIS

Location: Imperial Highway and I-105 EB On-ramp **City:** Hawthorne
Project No.: EBA2014-31 **Analyzed By:** MYR **File Name:** 2014-31-17 7

Problem Condition: Future 2035 Cumulative Traffic Volumes With Project
Proposed Geometric Configuration with Mitigation

Movement	Available Lanes		Peak Hour Volumes								Movement V/C Per Lane		Critical V/C	
			Existing		Other Proj.		Project		Study Vol.					
	No.	Cap.	AM	PM	AM	PM	AM	PM	AM	PM	AM	PM	AM	PM
N/B Left	0.0	0	43	25	0	0	0	0	51	31	0.000	0.000		
N/B Thru	1.0	1600	74	189	0	0	0	0	88	234	0.104	0.203	0.104	0.203
N/B Right	0.0	0	22	49	0	0	0	0	26	61	0.000	0.000		
S/B Left	0.0	0	0	0	0	0	0	0	0	0	0.000	0.000	0.000	0.000
S/B Thru	0.0	0	0	0	0	0	0	0	0	0	0.000	0.000		
S/B Right	0.0	0	0	0	0	0	0	0	0	0	0.000	0.000		
E/B Left	2.0	2880	279	630	0	0	24	64	356	843	0.124	0.293	0.124	0.293
E/B Thru	3.0	4800	440	1468	0	0	7	22	531	1836	0.114	0.392		
E/B Right	0.0	0	14	37	0	0	0	0	17	46	0.000	0.000		
W/B Left	1.0	1600	21	40	0	0	0	0	25	49	0.016	0.031		
W/B Thru	3.0	4800	1193	558	0	0	62	63	1484	752	0.309	0.157	0.309	
W/B Right	1.0	1600	371	287	0	0	0	0	442	355	0.276	0.222		0.222
	ANALYSIS RESULTS :								Sum Of Critical V/C:				0.536	0.718
									Lost Time:				0.100	0.100
									Total V/C:				0.636	0.818
									Level Of Service:				B	D

ASSUMPTIONS AND METHODOLOGY

Existing Counts Year: 2015
Study Volume Year: 2020 (2035 for Cumulative)
Annual Growth Factor: 0.26 Percent

Lane Capacity
Single Through Lane = 1600 Vehicles Per Hour
Single Turn Lane = 1600 Vehicles Per Hour
Dual Turn Lane = 2880 Vehicles Per Hour

Level Of Service Definition

Total V/C	LOS
Under 0.605	A
0.605 - 0.704	B
0.705 - 0.804	C
0.805 - 0.904	D
0.905 - 1.004	E
Over 1.005	F

Lost time for signal Yellow and All red intervals: 0.10 of V/C Ratio

NOTES:

EVAN BROOKS ASSOCIATES, PASADENA, CALIFORNIA

INTERSECTION CAPACITY UTILIZATION ANALYSIS

Location: Hawthorne Boulevard and I-105 WB Off-ramp **City:** Hawthorne
Project No.: EBA2014-31 **Analyzed By:** MYR **File Name:** 2014-31-18 1

Problem Condition: Existing 2015 Traffic Conditions (Count Date: 6-11-15)
Existing Geometric Configuration

Movement	Available Lanes		Peak Hour Volumes								Movement V/C Per Lane		Critical V/C	
			Existing		Other Proj.		Project		Study Vol.					
	No.	Cap.	AM	PM	AM	PM	AM	PM	AM	PM	AM	PM	AM	PM
N/B Left	0.0	0	0	0	0	0	0	0	0	0	0.000	0.000	0.000	0.000
N/B Thru	3.0	4800	870	988	0	0	0	0	870	988	0.181	0.206		
N/B Right	0.0	0	0	0	0	0	0	0	0	0	0.000	0.000		
S/B Left	0.0	0	0	0	0	0	0	0	0	0	0.000	0.000		
S/B Thru	4.0	6400	1415	1649	0	0	0	0	1415	1649	0.221	0.258	0.221	0.258
S/B Right	0.0	0	0	0	0	0	0	0	0	0	0.000	0.000		
E/B Left	0.0	0	0	0	0	0	0	0	0	0	0.000	0.000		
E/B Thru	0.0	0	0	0	0	0	0	0	0	0	0.000	0.000	0.000	0.000
E/B Right	0.0	0	0	0	0	0	0	0	0	0	0.000	0.000	0.000	0.000
W/B Left	1.0	1600	231	385	0	0	0	0	231	385	0.144	0.241	0.144	0.241
W/B Thru	0.0	0	0	0	0	0	0	0	0	0	0.000	0.000		
W/B Right	2.0	2880	375	475	0	0	0	0	375	475	0.130	0.165		
	ANALYSIS RESULTS :								Sum Of Critical V/C:				0.365	0.498
									Lost Time:				0.100	0.100
									Total V/C:				0.465	0.598
									Level Of Service:				A	A

ASSUMPTIONS AND METHODOLOGY

Existing Counts Year: 2015
Study Volume Year: 2015
Annual Growth Factor: 0.26 Percent

Lane Capacity
Single Through Lane = 1600 Vehicles Per Hour
Single Turn Lane = 1600 Vehicles Per Hour
Dual Turn Lane = 2880 Vehicles Per Hour

Level Of Service Definition

Total V/C	LOS
Under 0.605	A
0.605 - 0.704	B
0.705 - 0.804	C
0.805 - 0.904	D
0.905 - 1.004	E
Over 1.005	F

Lost time for signal Yellow and All red intervals: 0.10 of V/C Ratio

NOTES:

EVAN BROOKS ASSOCIATES, PASADENA, CALIFORNIA

INTERSECTION CAPACITY UTILIZATION ANALYSIS

Location: Hawthorne Boulevard and I-105 WB Off-ramp **City:** Hawthorne
Project No.: EBA2014-31 **Analyzed By:** MYR **File Name:** 2014-31-18 2

Problem Condition: Future 2020 Traffic Volumes with Ambient Growth
Existing Geometric Configuration

Movement	Available Lanes		Peak Hour Volumes								Movement V/C Per Lane		Critical V/C	
			Existing		Other Proj.		Project		Study Vol.					
	No.	Cap.	AM	PM	AM	PM	AM	PM	AM	PM	AM	PM	AM	PM
N/B Left	0.0	0	0	0	0	0	0	0	0	0	0.000	0.000	0.000	0.000
N/B Thru	3.0	4800	870	988	0	0	0	0	881	1001	0.184	0.209		
N/B Right	0.0	0	0	0	0	0	0	0	0	0	0.000	0.000		
S/B Left	0.0	0	0	0	0	0	0	0	0	0	0.000	0.000		
S/B Thru	4.0	6400	1415	1649	0	0	0	0	1433	1671	0.224	0.261	0.224	0.261
S/B Right	0.0	0	0	0	0	0	0	0	0	0	0.000	0.000		
E/B Left	0.0	0	0	0	0	0	0	0	0	0	0.000	0.000		
E/B Thru	0.0	0	0	0	0	0	0	0	0	0	0.000	0.000	0.000	0.000
E/B Right	0.0	0	0	0	0	0	0	0	0	0	0.000	0.000	0.000	0.000
W/B Left	1.0	1600	231	385	0	0	0	0	234	390	0.146	0.244	0.146	0.244
W/B Thru	0.0	0	0	0	0	0	0	0	0	0	0.000	0.000		
W/B Right	2.0	2880	375	475	0	0	0	0	380	481	0.132	0.167		
	ANALYSIS RESULTS :								Sum Of Critical V/C:				0.370	0.505
									Lost Time:				0.100	0.100
									Total V/C:				0.470	0.605
									Level Of Service:				A	A

ASSUMPTIONS AND METHODOLOGY

Existing Counts Year: 2015
Study Volume Year: 2020
Annual Growth Factor: 0.26 Percent

Lane Capacity
Single Through Lane = 1600 Vehicles Per Hour
Single Turn Lane = 1600 Vehicles Per Hour
Dual Turn Lane = 2880 Vehicles Per Hour

Level Of Service Definition

Total V/C	LOS
Under 0.605	A
0.605 - 0.704	B
0.705 - 0.804	C
0.805 - 0.904	D
0.905 - 1.004	E
Over 1.005	F

Lost time for signal Yellow and All red intervals: 0.10 of V/C Ratio

NOTES:

EVAN BROOKS ASSOCIATES, PASADENA, CALIFORNIA

INTERSECTION CAPACITY UTILIZATION ANALYSIS

Location: Hawthorne Boulevard and I-105 WB Off-ramp **City:** Hawthorne
Project No.: EBA2014-31 **Analyzed By:** MYR **File Name:** 2014-31-18 3

Problem Condition: Future 2020 Cumulative Traffic Volumes With Project
Existing Geometric Configuration

Movement	Available Lanes		Peak Hour Volumes								Movement V/C Per Lane		Critical V/C	
			Existing		Other Proj.		Project		Study Vol.					
	No.	Cap.	AM	PM	AM	PM	AM	PM	AM	PM	AM	PM	AM	PM
N/B Left	0.0	0	0	0	0	0	0	0	0	0	0.000	0.000	0.000	0.000
N/B Thru	3.0	4800	870	988	0	0	19	57	900	1058	0.188	0.220		
N/B Right	0.0	0	0	0	0	0	0	0	0	0	0.000	0.000		
S/B Left	0.0	0	0	0	0	0	0	0	0	0	0.000	0.000		
S/B Thru	4.0	6400	1415	1649	0	0	40	42	1474	1713	0.230	0.268	0.230	0.268
S/B Right	0.0	0	0	0	0	0	0	0	0	0	0.000	0.000		
E/B Left	0.0	0	0	0	0	0	0	0	0	0	0.000	0.000		
E/B Thru	0.0	0	0	0	0	0	0	0	0	0	0.000	0.000	0.000	0.000
E/B Right	0.0	0	0	0	0	0	0	0	0	0	0.000	0.000	0.000	0.000
W/B Left	1.0	1600	231	385	0	0	59	47	293	437	0.183	0.273	0.183	0.273
W/B Thru	0.0	0	0	0	0	0	0	0	0	0	0.000	0.000		
W/B Right	2.0	2880	375	475	0	0	-1	0	379	481	0.132	0.167		
	ANALYSIS RESULTS :								Sum Of Critical V/C:				0.414	0.541
									Lost Time:				0.100	0.100
									Total V/C:				0.514	0.641
									Level Of Service:				A	B

ASSUMPTIONS AND METHODOLOGY

Existing Counts Year: 2015
Study Volume Year: 2020
Annual Growth Factor: 0.26 Percent

Lane Capacity
Single Through Lane = 1600 Vehicles Per Hour
Single Turn Lane = 1600 Vehicles Per Hour
Dual Turn Lane = 2880 Vehicles Per Hour

Level Of Service Definition

Total V/C	LOS
Under 0.605	A
0.605 - 0.704	B
0.705 - 0.804	C
0.805 - 0.904	D
0.905 - 1.004	E
Over 1.005	F

Lost time for signal Yellow and All red intervals: 0.10 of V/C Ratio

NOTES:

EVAN BROOKS ASSOCIATES, PASADENA, CALIFORNIA

INTERSECTION CAPACITY UTILIZATION ANALYSIS

Location: Hawthorne Boulevard and I-105 WB Off-ramp **City:** Hawthorne
Project No.: EBA2014-31 **Analyzed By:** MYR **File Name:** 2014-31-18 5

Problem Condition: Future 2035 Cumulative Traffic Volumes Without Project
Existing Geometric Configuration

Movement	Available Lanes		Peak Hour Volumes								Movement V/C Per Lane		Critical V/C	
			Existing		Other Proj.		Project		Study Vol.					
	No.	Cap.	AM	PM	AM	PM	AM	PM	AM	PM	AM	PM	AM	PM
N/B Left	0.0	0	0	0	0	0	0	0	0	0	0.000	0.000	0.000	0.000
N/B Thru	3.0	4800	870	988	0	0	0	0	1037	1221	0.216	0.254		
N/B Right	0.0	0	0	0	0	0	0	0	0	0	0.000	0.000		
S/B Left	0.0	0	0	0	0	0	0	0	0	0	0.000	0.000		
S/B Thru	4.0	6400	1415	1649	0	0	0	0	1687	2038	0.264	0.318	0.264	0.318
S/B Right	0.0	0	0	0	0	0	0	0	0	0	0.000	0.000		
E/B Left	0.0	0	0	0	0	0	0	0	0	0	0.000	0.000		
E/B Thru	0.0	0	0	0	0	0	0	0	0	0	0.000	0.000	0.000	0.000
E/B Right	0.0	0	0	0	0	0	0	0	0	0	0.000	0.000	0.000	0.000
W/B Left	1.0	1600	231	385	0	0	0	0	275	476	0.172	0.297	0.172	0.297
W/B Thru	0.0	0	0	0	0	0	0	0	0	0	0.000	0.000		
W/B Right	2.0	2880	375	475	0	0	0	0	447	587	0.155	0.204		
	ANALYSIS RESULTS :								Sum Of Critical V/C:				0.436	0.616
									Lost Time:				0.100	0.100
									Total V/C:				0.536	0.716
									Level Of Service:				A	C

ASSUMPTIONS AND METHODOLOGY

Existing Counts Year: 2015
Study Volume Year: 2020 (2035 for Cumulative)
Annual Growth Factor: 0.26 Percent

Lane Capacity
Single Through Lane = 1600 Vehicles Per Hour
Single Turn Lane = 1600 Vehicles Per Hour
Dual Turn Lane = 2880 Vehicles Per Hour

Level Of Service Definition

Total V/C	LOS
Under 0.605	A
0.605 - 0.704	B
0.705 - 0.804	C
0.805 - 0.904	D
0.905 - 1.004	E
Over 1.005	F

Lost time for signal Yellow and All red intervals: 0.10 of V/C Ratio

NOTES:

EVAN BROOKS ASSOCIATES, PASADENA, CALIFORNIA

INTERSECTION CAPACITY UTILIZATION ANALYSIS

Location: Hawthorne Boulevard and I-105 WB Off-ramp **City:** Hawthorne
Project No.: EBA2014-31 **Analyzed By:** MYR **File Name:** 2014-31-18 4

Problem Condition: Future 2035 Cumulative Traffic Volumes With Project
Existing Geometric Configuration

Movement	Available Lanes		Peak Hour Volumes								Movement V/C Per Lane		Critical V/C	
			Existing		Other Proj.		Project		Study Vol.					
	No.	Cap.	AM	PM	AM	PM	AM	PM	AM	PM	AM	PM	AM	PM
N/B Left	0.0	0	0	0	0	0	0	0	0	0	0.000	0.000	0.000	0.000
N/B Thru	3.0	4800	870	988	0	0	19	57	1056	1278	0.220	0.266		
N/B Right	0.0	0	0	0	0	0	0	0	0	0	0.000	0.000		
S/B Left	0.0	0	0	0	0	0	0	0	0	0	0.000	0.000		
S/B Thru	4.0	6400	1415	1649	0	0	40	42	1727	2081	0.270	0.325	0.270	0.325
S/B Right	0.0	0	0	0	0	0	0	0	0	0	0.000	0.000		
E/B Left	0.0	0	0	0	0	0	0	0	0	0	0.000	0.000		
E/B Thru	0.0	0	0	0	0	0	0	0	0	0	0.000	0.000	0.000	0.000
E/B Right	0.0	0	0	0	0	0	0	0	0	0	0.000	0.000	0.000	0.000
W/B Left	1.0	1600	231	385	0	0	59	47	335	523	0.209	0.327	0.209	0.327
W/B Thru	0.0	0	0	0	0	0	0	0	0	0	0.000	0.000		
W/B Right	2.0	2880	375	475	0	0	-1	0	446	587	0.155	0.204		
	ANALYSIS RESULTS :								Sum Of Critical V/C:				0.479	0.652
									Lost Time:				0.100	0.100
									Total V/C:				0.579	0.752
									Level Of Service:				A	C

ASSUMPTIONS AND METHODOLOGY

Existing Counts Year: 2015
Study Volume Year: 2020 (2035 for Cumulative)
Annual Growth Factor: 0.26 Percent

Lane Capacity
Single Through Lane = 1600 Vehicles Per Hour
Single Turn Lane = 1600 Vehicles Per Hour
Dual Turn Lane = 2880 Vehicles Per Hour

Level Of Service Definition

Total V/C	LOS
Under 0.605	A
0.605 - 0.704	B
0.705 - 0.804	C
0.805 - 0.904	D
0.905 - 1.004	E
Over 1.005	F

Lost time for signal Yellow and All red intervals: 0.10 of V/C Ratio

NOTES:

EVAN BROOKS ASSOCIATES, PASADENA, CALIFORNIA

INTERSECTION CAPACITY UTILIZATION ANALYSIS

Location: El Segundo Boulevard and I-405 NB On/Off-ramps **City:** Hawthorne
Project No.: EBA2014-31 **Analyzed By:** MYR **File Name:** 2014-31-19 1

Problem Condition: Existing 2015 Traffic Conditions (Count Date: 6-11-15)
Existing Geometric Configuration

Movement	Available Lanes		Peak Hour Volumes								Movement V/C Per Lane		Critical V/C	
			Existing		Other Proj.		Project		Study Vol.					
	No.	Cap.	AM	PM	AM	PM	AM	PM	AM	PM	AM	PM	AM	PM
N/B Left	2.0	2880	711	380	0	0	0	0	711	380	0.247	0.132	0.247	0.132
N/B Thru	0.0	0	0	0	0	0	0	0	0	0	0.000	0.000		
N/B Right	1.0	1600	47	188	0	0	0	0	47	188	0.029	0.118		
S/B Left	0.0	0	0	0	0	0	0	0	0	0	0.000	0.000		
S/B Thru	0.0	0	0	0	0	0	0	0	0	0	0.000	0.000	0.000	0.000
S/B Right	0.0	0	0	0	0	0	0	0	0	0	0.000	0.000	0.000	0.000
E/B Left	0.0	0	0	0	0	0	0	0	0	0	0.000	0.000	0.000	
E/B Thru	3.0	4800	635	2117	0	0	0	0	635	2117	0.132	0.441		0.441
E/B Right	1.0	1600	306	376	0	0	0	0	306	376	0.191	0.116		
W/B Left	0.0	0	0	0	0	0	0	0	0	0	0.000	0.000		0.000
W/B Thru	3.0	4800	892	497	0	0	0	0	892	497	0.186	0.104		
W/B Right	1.0	1600	558	295	0	0	0	0	558	295	0.349	0.184	0.349	
	ANALYSIS RESULTS :								Sum Of Critical V/C:				0.596	0.573
									Lost Time:				0.100	0.100
									Total V/C:				0.696	0.673
									Level Of Service:				B	B

ASSUMPTIONS AND METHODOLOGY

Existing Counts Year: 2015
Study Volume Year: 2015
Annual Growth Factor: 0.26 Percent

Lane Capacity
Single Through Lane = 1600 Vehicles Per Hour
Single Turn Lane = 1600 Vehicles Per Hour
Dual Turn Lane = 2880 Vehicles Per Hour

Level Of Service Definition

Total V/C	LOS
Under 0.605	A
0.605 - 0.704	B
0.705 - 0.804	C
0.805 - 0.904	D
0.905 - 1.004	E
Over 1.005	F

Lost time for signal Yellow and All red intervals: 0.10 of V/C Ratio

NOTES:

EVAN BROOKS ASSOCIATES, PASADENA, CALIFORNIA

INTERSECTION CAPACITY UTILIZATION ANALYSIS

Location: El Segundo Boulevard and I-405 NB On/Off-ramps **City:** Hawthorne
Project No.: EBA2014-31 **Analyzed By:** MYR **File Name:** 2014-31-19 2

Problem Condition: Future 2020 Traffic Volumes with Ambient Growth
Existing Geometric Configuration

Movement	Available Lanes		Peak Hour Volumes								Movement V/C Per Lane		Critical V/C	
			Existing		Other Proj.		Project		Study Vol.					
	No.	Cap.	AM	PM	AM	PM	AM	PM	AM	PM	AM	PM	AM	PM
N/B Left	2.0	2880	711	380	0	0	0	0	720	385	0.250	0.134	0.250	0.134
N/B Thru	0.0	0	0	0	0	0	0	0	0	0	0.000	0.000		
N/B Right	1.0	1600	47	188	0	0	0	0	48	190	0.030	0.119		
S/B Left	0.0	0	0	0	0	0	0	0	0	0	0.000	0.000		
S/B Thru	0.0	0	0	0	0	0	0	0	0	0	0.000	0.000	0.000	0.000
S/B Right	0.0	0	0	0	0	0	0	0	0	0	0.000	0.000	0.000	0.000
E/B Left	0.0	0	0	0	0	0	0	0	0	0	0.000	0.000	0.000	
E/B Thru	3.0	4800	635	2117	0	0	0	0	643	2145	0.134	0.447		0.447
E/B Right	1.0	1600	306	376	0	0	0	0	310	381	0.194	0.118		
W/B Left	0.0	0	0	0	0	0	0	0	0	0	0.000	0.000		0.000
W/B Thru	3.0	4800	892	497	0	0	0	0	904	503	0.188	0.105		
W/B Right	1.0	1600	558	295	0	0	0	0	565	299	0.353	0.187	0.353	
	ANALYSIS RESULTS :								Sum Of Critical V/C:				0.603	0.580
									Lost Time:				0.100	0.100
									Total V/C:				0.703	0.680
									Level Of Service:				B	B

ASSUMPTIONS AND METHODOLOGY

Existing Counts Year: 2015
Study Volume Year: 2020
Annual Growth Factor: 0.26 Percent

Lane Capacity
Single Through Lane = 1600 Vehicles Per Hour
Single Turn Lane = 1600 Vehicles Per Hour
Dual Turn Lane = 2880 Vehicles Per Hour

Level Of Service Definition

Total V/C	LOS
Under 0.605	A
0.605 - 0.704	B
0.705 - 0.804	C
0.805 - 0.904	D
0.905 - 1.004	E
Over 1.005	F

Lost time for signal Yellow and All red intervals: 0.10 of V/C Ratio

NOTES:

EVAN BROOKS ASSOCIATES, PASADENA, CALIFORNIA

INTERSECTION CAPACITY UTILIZATION ANALYSIS

Location: El Segundo Boulevard and I-405 NB On/Off-ramps **City:** Hawthorne
Project No.: EBA2014-31 **Analyzed By:** MYR **File Name:** 2014-31-19 3

Problem Condition: Future 2020 Cumulative Traffic Volumes With Project
Existing Geometric Configuration

Movement	Available Lanes		Peak Hour Volumes								Movement V/C Per Lane		Critical V/C	
			Existing		Other Proj.		Project		Study Vol.					
	No.	Cap.	AM	PM	AM	PM	AM	PM	AM	PM	AM	PM	AM	PM
N/B Left	2.0	2880	711	380	0	0	0	0	720	385	0.250	0.134	0.250	
N/B Thru	0.0	0	0	0	0	0	0	0	0	0	0.000	0.000		
N/B Right	1.0	1600	47	188	0	0	40	42	88	233	0.055	0.146		0.146
S/B Left	0.0	0	0	0	0	0	0	0	0	0	0.000	0.000		0.000
S/B Thru	0.0	0	0	0	0	0	0	0	0	0	0.000	0.000	0.000	
S/B Right	0.0	0	0	0	0	0	0	0	0	0	0.000	0.000	0.000	
E/B Left	0.0	0	0	0	0	0	0	0	0	0	0.000	0.000	0.000	
E/B Thru	3.0	4800	635	2117	0	0	119	126	762	2270	0.159	0.473		0.473
E/B Right	1.0	1600	306	376	0	0	0	0	310	381	0.194	0.118		
W/B Left	0.0	0	0	0	0	0	0	0	0	0	0.000	0.000		0.000
W/B Thru	3.0	4800	892	497	0	0	60	170	963	674	0.201	0.140		
W/B Right	1.0	1600	558	295	0	0	21	57	586	356	0.366	0.223	0.366	
	ANALYSIS RESULTS :								Sum Of Critical V/C:				0.616	0.619
									Lost Time:				0.100	0.100
									Total V/C:				0.716	0.719
									Level Of Service:				C	C

ASSUMPTIONS AND METHODOLOGY

Existing Counts Year: 2015
Study Volume Year: 2020
Annual Growth Factor: 0.26 Percent

Lane Capacity
Single Through Lane = 1600 Vehicles Per Hour
Single Turn Lane = 1600 Vehicles Per Hour
Dual Turn Lane = 2880 Vehicles Per Hour

Level Of Service Definition

Total V/C	LOS
Under 0.605	A
0.605 - 0.704	B
0.705 - 0.804	C
0.805 - 0.904	D
0.905 - 1.004	E
Over 1.005	F

Lost time for signal Yellow and All red intervals: 0.10 of V/C Ratio

NOTES:

EVAN BROOKS ASSOCIATES, PASADENA, CALIFORNIA

INTERSECTION CAPACITY UTILIZATION ANALYSIS

Location: El Segundo Boulevard and I-405 NB On/Off-ramps **City:** Hawthorne
Project No.: EBA2014-31 **Analyzed By:** MYR **File Name:** 2014-31-19 5

Problem Condition: Future 2035 Cumulative Traffic Volumes Without Project
Existing Geometric Configuration

Movement	Available Lanes		Peak Hour Volumes								Movement V/C Per Lane		Critical V/C	
			Existing		Other Proj.		Project		Study Vol.					
	No.	Cap.	AM	PM	AM	PM	AM	PM	AM	PM	AM	PM	AM	PM
N/B Left	2.0	2880	711	380	0	0	0	0	848	470	0.294	0.163	0.294	0.163
N/B Thru	0.0	0	0	0	0	0	0	0	0	0	0.000	0.000		
N/B Right	1.0	1600	47	188	0	0	0	0	56	232	0.035	0.145		
S/B Left	0.0	0	0	0	0	0	0	0	0	0	0.000	0.000		
S/B Thru	0.0	0	0	0	0	0	0	0	0	0	0.000	0.000	0.000	0.000
S/B Right	0.0	0	0	0	0	0	0	0	0	0	0.000	0.000	0.000	0.000
E/B Left	0.0	0	0	0	0	0	0	0	0	0	0.000	0.000	0.000	
E/B Thru	3.0	4800	635	2117	0	0	0	0	757	2617	0.158	0.545		0.545
E/B Right	1.0	1600	306	376	0	0	0	0	365	465	0.228	0.144		
W/B Left	0.0	0	0	0	0	0	0	0	0	0	0.000	0.000		0.000
W/B Thru	3.0	4800	892	497	0	0	0	0	1063	614	0.222	0.128		
W/B Right	1.0	1600	558	295	0	0	0	0	665	365	0.416	0.228	0.416	
	ANALYSIS RESULTS :								Sum Of Critical V/C:				0.710	0.708
									Lost Time:				0.100	0.100
									Total V/C:				0.810	0.808
									Level Of Service:				D	D

ASSUMPTIONS AND METHODOLOGY

Existing Counts Year: 2015
Study Volume Year: 2020 (2035 for Cumulative)
Annual Growth Factor: 0.26 Percent

Lane Capacity
Single Through Lane = 1600 Vehicles Per Hour
Single Turn Lane = 1600 Vehicles Per Hour
Dual Turn Lane = 2880 Vehicles Per Hour

Level Of Service Definition

Total V/C	LOS
Under 0.605	A
0.605 - 0.704	B
0.705 - 0.804	C
0.805 - 0.904	D
0.905 - 1.004	E
Over 1.005	F

Lost time for signal Yellow and All red intervals: 0.10 of V/C Ratio

NOTES:

EVAN BROOKS ASSOCIATES, PASADENA, CALIFORNIA

INTERSECTION CAPACITY UTILIZATION ANALYSIS

Location: El Segundo Boulevard and I-405 NB On/Off-ramps **City:** Hawthorne
Project No.: EBA2014-31 **Analyzed By:** MYR **File Name:** 2014-31-19 4

Problem Condition: Future 2035 Cumulative Traffic Volumes With Project
Existing Geometric Configuration

Movement	Available Lanes		Peak Hour Volumes								Movement V/C Per Lane		Critical V/C	
			Existing		Other Proj.		Project		Study Vol.					
	No.	Cap.	AM	PM	AM	PM	AM	PM	AM	PM	AM	PM	AM	PM
N/B Left	2.0	2880	711	380	0	0	0	0	848	470	0.294	0.163	0.294	
N/B Thru	0.0	0	0	0	0	0	0	0	0	0	0.000	0.000		
N/B Right	1.0	1600	47	188	0	0	40	42	96	275	0.060	0.172		0.172
S/B Left	0.0	0	0	0	0	0	0	0	0	0	0.000	0.000		0.000
S/B Thru	0.0	0	0	0	0	0	0	0	0	0	0.000	0.000	0.000	
S/B Right	0.0	0	0	0	0	0	0	0	0	0	0.000	0.000	0.000	
E/B Left	0.0	0	0	0	0	0	0	0	0	0	0.000	0.000	0.000	
E/B Thru	3.0	4800	635	2117	0	0	119	126	876	2742	0.182	0.571		0.571
E/B Right	1.0	1600	306	376	0	0	0	0	365	465	0.228	0.144		
W/B Left	0.0	0	0	0	0	0	0	0	0	0	0.000	0.000		0.000
W/B Thru	3.0	4800	892	497	0	0	60	170	1123	785	0.234	0.163		
W/B Right	1.0	1600	558	295	0	0	21	57	686	422	0.429	0.264	0.429	
	ANALYSIS RESULTS :								Sum Of Critical V/C:				0.723	0.743
									Lost Time:				0.100	0.100
									Total V/C:				0.823	0.843
									Level Of Service:				D	D

ASSUMPTIONS AND METHODOLOGY

Existing Counts Year: 2015
Study Volume Year: 2020 (2035 for Cumulative)
Annual Growth Factor: 0.26 Percent

Lane Capacity
Single Through Lane = 1600 Vehicles Per Hour
Single Turn Lane = 1600 Vehicles Per Hour
Dual Turn Lane = 2880 Vehicles Per Hour

Level Of Service Definition

Total V/C	LOS
Under 0.605	A
0.605 - 0.704	B
0.705 - 0.804	C
0.805 - 0.904	D
0.905 - 1.004	E
Over 1.005	F

Lost time for signal Yellow and All red intervals: 0.10 of V/C Ratio

NOTES:

EVAN BROOKS ASSOCIATES, PASADENA, CALIFORNIA

INTERSECTION CAPACITY UTILIZATION ANALYSIS

Location: El Segundo Boulevard and I-405 SB On/Off-ramps **City:** Hawthorne
Project No.: EBA2014-31 **Analyzed By:** MYR **File Name:** 2014-31-20 1

Problem Condition: Existing 2015 Traffic Conditions (Count Date: 6-11-15)
Existing Geometric Configuration

Movement	Available Lanes		Peak Hour Volumes								Movement V/C Per Lane		Critical V/C	
			Existing		Other Proj.		Project		Study Vol.					
	No.	Cap.	AM	PM	AM	PM	AM	PM	AM	PM	AM	PM	AM	PM
N/B Left	2.0	2880	325	279	0	0	0	0	325	279	0.113	0.097	0.113	
N/B Thru	0.0	0	0	0	0	0	0	0	0	0	0.000	0.000		
N/B Right	1.0	1600	116	336	0	0	0	0	116	336	0.073	0.210		0.210
S/B Left	0.0	0	0	0	0	0	0	0	0	0	0.000	0.000		0.000
S/B Thru	0.0	0	0	0	0	0	0	0	0	0	0.000	0.000	0.000	
S/B Right	0.0	0	0	0	0	0	0	0	0	0	0.000	0.000	0.000	
E/B Left	0.0	0	0	0	0	0	0	0	0	0	0.000	0.000	0.000	
E/B Thru	3.0	4800	504	1565	0	0	0	0	504	1565	0.105	0.326		
E/B Right	1.0	1600	244	881	0	0	0	0	244	881	0.051	0.463		0.463
W/B Left	0.0	0	0	0	0	0	0	0	0	0	0.000	0.000		0.000
W/B Thru	3.0	4800	1456	946	0	0	0	0	1456	946	0.303	0.197	0.303	
W/B Right	0.0	0	0	0	0	0	0	0	0	0	0.000	0.000		
	ANALYSIS RESULTS :								Sum Of Critical V/C:				0.416	0.673
									Lost Time:				0.100	0.100
									Total V/C:				0.516	0.773
									Level Of Service:				A	C

ASSUMPTIONS AND METHODOLOGY

Existing Counts Year: 2015
Study Volume Year: 2015
Annual Growth Factor: 0.26 Percent

Lane Capacity
Single Through Lane = 1600 Vehicles Per Hour
Single Turn Lane = 1600 Vehicles Per Hour
Dual Turn Lane = 2880 Vehicles Per Hour

Level Of Service Definition

Total V/C	LOS
Under 0.605	A
0.605 - 0.704	B
0.705 - 0.804	C
0.805 - 0.904	D
0.905 - 1.004	E
Over 1.005	F

Lost time for signal Yellow and All red intervals: 0.10 of V/C Ratio

NOTES:

EVAN BROOKS ASSOCIATES, PASADENA, CALIFORNIA

INTERSECTION CAPACITY UTILIZATION ANALYSIS

Location: El Segundo Boulevard and I-405 SB On/Off-ramps **City:** Hawthorne
Project No.: EBA2014-31 **Analyzed By:** MYR **File Name:** 2014-31-20 2

Problem Condition: Future 2020 Traffic Volumes with Ambient Growth
Existing Geometric Configuration

Movement	Available Lanes		Peak Hour Volumes								Movement V/C Per Lane		Critical V/C	
			Existing		Other Proj.		Project		Study Vol.					
	No.	Cap.	AM	PM	AM	PM	AM	PM	AM	PM	AM	PM	AM	PM
N/B Left	2.0	2880	325	279	0	0	0	0	329	283	0.114	0.098	0.114	
N/B Thru	0.0	0	0	0	0	0	0	0	0	0	0.000	0.000		
N/B Right	1.0	1600	116	336	0	0	0	0	118	340	0.073	0.213		0.213
S/B Left	0.0	0	0	0	0	0	0	0	0	0	0.000	0.000		0.000
S/B Thru	0.0	0	0	0	0	0	0	0	0	0	0.000	0.000	0.000	
S/B Right	0.0	0	0	0	0	0	0	0	0	0	0.000	0.000	0.000	
E/B Left	0.0	0	0	0	0	0	0	0	0	0	0.000	0.000	0.000	
E/B Thru	3.0	4800	504	1565	0	0	0	0	511	1585	0.106	0.330		
E/B Right	1.0	1600	244	881	0	0	0	0	247	893	0.052	0.469		0.469
W/B Left	0.0	0	0	0	0	0	0	0	0	0	0.000	0.000		0.000
W/B Thru	3.0	4800	1456	946	0	0	0	0	1475	958	0.307	0.200	0.307	
W/B Right	0.0	0	0	0	0	0	0	0	0	0	0.000	0.000		
	ANALYSIS RESULTS :								Sum Of Critical V/C:				0.422	0.682
									Lost Time:				0.100	0.100
									Total V/C:				0.522	0.782
									Level Of Service:				A	C

ASSUMPTIONS AND METHODOLOGY

Existing Counts Year: 2015
Study Volume Year: 2020
Annual Growth Factor: 0.26 Percent

Lane Capacity
Single Through Lane = 1600 Vehicles Per Hour
Single Turn Lane = 1600 Vehicles Per Hour
Dual Turn Lane = 2880 Vehicles Per Hour

Level Of Service Definition

Total V/C	LOS
Under 0.605	A
0.605 - 0.704	B
0.705 - 0.804	C
0.805 - 0.904	D
0.905 - 1.004	E
Over 1.005	F

Lost time for signal Yellow and All red intervals: 0.10 of V/C Ratio

NOTES:

EVAN BROOKS ASSOCIATES, PASADENA, CALIFORNIA

INTERSECTION CAPACITY UTILIZATION ANALYSIS

Location: El Segundo Boulevard and I-405 SB On/Off-ramps **City:** Hawthorne
Project No.: EBA2014-31 **Analyzed By:** MYR **File Name:** 2014-31-20 3

Problem Condition: Future 2020 Cumulative Traffic Volumes With Project
Existing Geometric Configuration

Movement	Available Lanes		Peak Hour Volumes								Movement V/C Per Lane		Critical V/C	
			Existing		Other Proj.		Project		Study Vol.					
	No.	Cap.	AM	PM	AM	PM	AM	PM	AM	PM	AM	PM	AM	PM
N/B Left	2.0	2880	325	279	0	0	0	0	329	283	0.114	0.098	0.114	
N/B Thru	0.0	0	0	0	0	0	0	0	0	0	0.000	0.000		
N/B Right	1.0	1600	116	336	0	0	40	42	158	383	0.099	0.239		0.239
S/B Left	0.0	0	0	0	0	0	0	0	0	0	0.000	0.000		0.000
S/B Thru	0.0	0	0	0	0	0	0	0	0	0	0.000	0.000	0.000	
S/B Right	0.0	0	0	0	0	0	0	0	0	0	0.000	0.000	0.000	
E/B Left	0.0	0	0	0	0	0	0	0	0	0	0.000	0.000	0.000	
E/B Thru	3.0	4800	504	1565	0	0	79	83	589	1669	0.123	0.348		
E/B Right	1.0	1600	244	881	0	0	0	0	247	893	0.052	0.469		0.469
W/B Left	0.0	0	0	0	0	0	0	0	0	0	0.000	0.000		0.000
W/B Thru	3.0	4800	1456	946	0	0	40	104	1515	1062	0.316	0.221	0.316	
W/B Right	0.0	0	0	0	0	0	0	0	0	0	0.000	0.000		
	ANALYSIS RESULTS :								Sum Of Critical V/C:				0.430	0.709
									Lost Time:				0.100	0.100
									Total V/C:				0.530	0.809
									Level Of Service:				A	D

ASSUMPTIONS AND METHODOLOGY

Existing Counts Year: 2015
Study Volume Year: 2020
Annual Growth Factor: 0.26 Percent

Lane Capacity
Single Through Lane = 1600 Vehicles Per Hour
Single Turn Lane = 1600 Vehicles Per Hour
Dual Turn Lane = 2880 Vehicles Per Hour

Level Of Service Definition

Total V/C	LOS
Under 0.605	A
0.605 - 0.704	B
0.705 - 0.804	C
0.805 - 0.904	D
0.905 - 1.004	E
Over 1.005	F

Lost time for signal Yellow and All red intervals: 0.10 of V/C Ratio

NOTES:

EVAN BROOKS ASSOCIATES, PASADENA, CALIFORNIA

INTERSECTION CAPACITY UTILIZATION ANALYSIS

Location: El Segundo Boulevard and I-405 SB On/Off-ramps **City:** Hawthorne
Project No.: EBA2014-31 **Analyzed By:** MYR **File Name:** 2014-31-20 5

Problem Condition: Future 2035 Cumulative Traffic Volumes Without Project
Existing Geometric Configuration

Movement	Available Lanes		Peak Hour Volumes								Movement V/C Per Lane		Critical V/C	
			Existing		Other Proj.		Project		Study Vol.					
	No.	Cap.	AM	PM	AM	PM	AM	PM	AM	PM	AM	PM	AM	PM
N/B Left	2.0	2880	325	279	0	0	0	0	387	345	0.135	0.120	0.135	
N/B Thru	0.0	0	0	0	0	0	0	0	0	0	0.000	0.000		
N/B Right	1.0	1600	116	336	0	0	0	0	138	415	0.086	0.260		0.260
S/B Left	0.0	0	0	0	0	0	0	0	0	0	0.000	0.000		0.000
S/B Thru	0.0	0	0	0	0	0	0	0	0	0	0.000	0.000	0.000	
S/B Right	0.0	0	0	0	0	0	0	0	0	0	0.000	0.000	0.000	
E/B Left	0.0	0	0	0	0	0	0	0	0	0	0.000	0.000	0.000	
E/B Thru	3.0	4800	504	1565	0	0	0	0	601	1934	0.125	0.403		
E/B Right	1.0	1600	244	881	0	0	0	0	291	1089	0.061	0.573		0.573
W/B Left	0.0	0	0	0	0	0	0	0	0	0	0.000	0.000		0.000
W/B Thru	3.0	4800	1456	946	0	0	0	0	1736	1169	0.362	0.244	0.362	
W/B Right	0.0	0	0	0	0	0	0	0	0	0	0.000	0.000		
	ANALYSIS RESULTS :								Sum Of Critical V/C:				0.496	0.832
									Lost Time:				0.100	0.100
									Total V/C:				0.596	0.932
									Level Of Service:				A	E

ASSUMPTIONS AND METHODOLOGY

Existing Counts Year: 2015
Study Volume Year: 2020 (2035 for Cumulative)
Annual Growth Factor: 0.26 Percent

Lane Capacity
Single Through Lane = 1600 Vehicles Per Hour
Single Turn Lane = 1600 Vehicles Per Hour
Dual Turn Lane = 2880 Vehicles Per Hour

Level Of Service Definition

Total V/C	LOS
Under 0.605	A
0.605 - 0.704	B
0.705 - 0.804	C
0.805 - 0.904	D
0.905 - 1.004	E
Over 1.005	F

Lost time for signal Yellow and All red intervals: 0.10 of V/C Ratio

NOTES:

EVAN BROOKS ASSOCIATES, PASADENA, CALIFORNIA

INTERSECTION CAPACITY UTILIZATION ANALYSIS

Location: El Segundo Boulevard and I-405 SB On/Off-ramps **City:** Hawthorne
Project No.: EBA2014-31 **Analyzed By:** MYR **File Name:** 2014-31-20 4

Problem Condition: Future 2035 Cumulative Traffic Volumes With Project
Existing Geometric Configuration

Movement	Available Lanes		Peak Hour Volumes								Movement V/C Per Lane		Critical V/C	
			Existing		Other Proj.		Project		Study Vol.					
	No.	Cap.	AM	PM	AM	PM	AM	PM	AM	PM	AM	PM	AM	PM
N/B Left	2.0	2880	325	279	0	0	0	0	387	345	0.135	0.120	0.135	
N/B Thru	0.0	0	0	0	0	0	0	0	0	0	0.000	0.000		
N/B Right	1.0	1600	116	336	0	0	40	42	178	458	0.112	0.286		0.286
S/B Left	0.0	0	0	0	0	0	0	0	0	0	0.000	0.000		0.000
S/B Thru	0.0	0	0	0	0	0	0	0	0	0	0.000	0.000	0.000	
S/B Right	0.0	0	0	0	0	0	0	0	0	0	0.000	0.000	0.000	
E/B Left	0.0	0	0	0	0	0	0	0	0	0	0.000	0.000	0.000	
E/B Thru	3.0	4800	504	1565	0	0	79	83	680	2018	0.142	0.420		
E/B Right	1.0	1600	244	881	0	0	0	0	291	1089	0.061	0.573		0.573
W/B Left	0.0	0	0	0	0	0	0	0	0	0	0.000	0.000		0.000
W/B Thru	3.0	4800	1456	946	0	0	40	104	1776	1273	0.370	0.265	0.370	
W/B Right	0.0	0	0	0	0	0	0	0	0	0	0.000	0.000		
	ANALYSIS RESULTS :								Sum Of Critical V/C:				0.504	0.859
									Lost Time:				0.100	0.100
									Total V/C:				0.604	0.959
									Level Of Service:				A	E

ASSUMPTIONS AND METHODOLOGY

Existing Counts Year: 2015
Study Volume Year: 2020 (2035 for Cumulative)
Annual Growth Factor: 0.26 Percent

Lane Capacity
Single Through Lane = 1600 Vehicles Per Hour
Single Turn Lane = 1600 Vehicles Per Hour
Dual Turn Lane = 2880 Vehicles Per Hour

Level Of Service Definition

Total V/C	LOS
Under 0.605	A
0.605 - 0.704	B
0.705 - 0.804	C
0.805 - 0.904	D
0.905 - 1.004	E
Over 1.005	F

Lost time for signal Yellow and All red intervals: 0.10 of V/C Ratio

NOTES:

EVAN BROOKS ASSOCIATES, PASADENA, CALIFORNIA

INTERSECTION CAPACITY UTILIZATION ANALYSIS

Location: El Segundo Boulevard and I-405 SB On/Off-ramps **City:** Hawthorne
Project No.: EBA2014-31 **Analyzed By:** MYR **File Name:** 2014-31-20 7

Problem Condition: Future 2035 Cumulative Traffic Volumes With Project
Proposed Geometric Configuration with Mitigation

Movement	Available Lanes		Peak Hour Volumes								Movement V/C Per Lane		Critical V/C	
			Existing		Other Proj.		Project		Study Vol.					
	No.	Cap.	AM	PM	AM	PM	AM	PM	AM	PM	AM	PM	AM	PM
N/B Left	2.0	2880	325	279	0	0	0	0	387	345	0.135	0.120	0.135	
N/B Thru	0.0	0	0	0	0	0	0	0	0	0	0.000	0.000		
N/B Right	1.0	1600	116	336	0	0	40	42	178	458	0.112	0.286		0.286
S/B Left	0.0	0	0	0	0	0	0	0	0	0	0.000	0.000		0.000
S/B Thru	0.0	0	0	0	0	0	0	0	0	0	0.000	0.000	0.000	
S/B Right	0.0	0	0	0	0	0	0	0	0	0	0.000	0.000	0.000	
E/B Left	0.0	0	0	0	0	0	0	0	0	0	0.000	0.000	0.000	
E/B Thru	3.0	4800	504	1565	0	0	79	83	680	2018	0.142	0.420		0.420
E/B Right	2.0	2880	244	881	0	0	0	0	291	1089	0.101	0.129		
W/B Left	0.0	0	0	0	0	0	0	0	0	0	0.000	0.000		0.000
W/B Thru	3.0	4800	1456	946	0	0	40	104	1776	1273	0.370	0.265	0.370	
W/B Right	0.0	0	0	0	0	0	0	0	0	0	0.000	0.000		
	ANALYSIS RESULTS :								Sum Of Critical V/C:				0.504	0.706
									Lost Time:				0.100	0.100
									Total V/C:				0.604	0.806
									Level Of Service:				A	D

ASSUMPTIONS AND METHODOLOGY

Existing Counts Year: 2015
Study Volume Year: 2020 (2035 for Cumulative)
Annual Growth Factor: 0.26 Percent

Lane Capacity
Single Through Lane = 1600 Vehicles Per Hour
Single Turn Lane = 1600 Vehicles Per Hour
Dual Turn Lane = 2880 Vehicles Per Hour

Level Of Service Definition

Total V/C	LOS
Under 0.605	A
0.605 - 0.704	B
0.705 - 0.804	C
0.805 - 0.904	D
0.905 - 1.004	E
Over 1.005	F

Lost time for signal Yellow and All red intervals: 0.10 of V/C Ratio

NOTES:

EVAN BROOKS ASSOCIATES, PASADENA, CALIFORNIA

INTERSECTION CAPACITY UTILIZATION ANALYSIS

Location: El Segundo Boulevard and Birch Avenue **City:** Hawthorne
Project No.: EBA2014-31 **Analyzed By:** MYR **File Name:** 2014-31-21 1

Problem Condition: Existing 2015 Traffic Conditions (Count Date: 9-16-15)
Existing Geometric Configuration

Movement	Available Lanes		Peak Hour Volumes								Movement V/C Per Lane		Critical V/C	
			Existing		Other Proj.		Project		Study Vol.					
	No.	Cap.	AM	PM	AM	PM	AM	PM	AM	PM	AM	PM	AM	PM
N/B Left	0.0	0	0	0	0	0	0	0	0	0	0.000	0.000		
N/B Thru	0.0	0	0	0	0	0	0	0	0	0	0.000	0.000	0.000	0.000
N/B Right	0.0	0	0	0	0	0	0	0	0	0	0.000	0.000	0.000	0.000
S/B Left	1.0	1600	146	195	0	0	0	0	146	195	0.091	0.122	0.091	0.122
S/B Thru	1.0	1600	0	0	0	0	0	0	0	0	0.061	0.075		
S/B Right	0.0	0	97	120	0	0	0	0	97	120	0.000	0.000		
E/B Left	1.0	1600	45	60	0	0	0	0	45	60	0.028	0.038	0.028	
E/B Thru	2.0	3200	835	1575	0	0	0	0	835	1575	0.261	0.492		0.492
E/B Right	0.0	0	0	0	0	0	0	0	0	0	0.000	0.000		
W/B Left	0.0	0	0	0	0	0	0	0	0	0	0.000	0.000		0.000
W/B Thru	3.0	4800	1267	918	0	0	0	0	1267	918	0.293	0.207	0.293	
W/B Right	0.0	0	141	76	0	0	0	0	141	76	0.000	0.000		
	ANALYSIS RESULTS :								Sum Of Critical V/C:				0.413	0.614
									Lost Time:				0.100	0.100
									Total V/C:				0.513	0.714
									Level Of Service:				A	C

ASSUMPTIONS AND METHODOLOGY

Existing Counts Year: 2015
Study Volume Year: 2015
Annual Growth Factor: 0.26 Percent

Lane Capacity
Single Through Lane = 1600 Vehicles Per Hour
Single Turn Lane = 1600 Vehicles Per Hour
Dual Turn Lane = 2880 Vehicles Per Hour

Level Of Service Definition

Total V/C	LOS
Under 0.605	A
0.605 - 0.704	B
0.705 - 0.804	C
0.805 - 0.904	D
0.905 - 1.004	E
Over 1.005	F

Lost time for signal Yellow and All red intervals: 0.10 of V/C Ratio

NOTES:

EVAN BROOKS ASSOCIATES, PASADENA, CALIFORNIA

INTERSECTION CAPACITY UTILIZATION ANALYSIS

Location: El Segundo Boulevard and Birch Avenue **City:** Hawthorne
Project No.: EBA2014-31 **Analyzed By:** MYR **File Name:** 2014-31-21 2

Problem Condition: Future 2020 Traffic Volumes with Ambient Growth
Existing Geometric Configuration

Movement	Available Lanes		Peak Hour Volumes								Movement V/C Per Lane		Critical V/C	
			Existing		Other Proj.		Project		Study Vol.					
	No.	Cap.	AM	PM	AM	PM	AM	PM	AM	PM	AM	PM	AM	PM
N/B Left	0.0	0	0	0	0	0	0	0	0	0	0.000	0.000		
N/B Thru	0.0	0	0	0	0	0	0	0	0	0	0.000	0.000	0.000	0.000
N/B Right	0.0	0	0	0	0	0	0	0	0	0	0.000	0.000	0.000	0.000
S/B Left	1.0	1600	146	195	0	0	0	0	148	198	0.092	0.123	0.092	0.123
S/B Thru	1.0	1600	0	0	0	0	0	0	0	0	0.061	0.076		
S/B Right	0.0	0	97	120	0	0	0	0	98	122	0.000	0.000		
E/B Left	1.0	1600	45	60	0	0	0	0	46	61	0.028	0.038	0.028	
E/B Thru	2.0	3200	835	1575	0	0	0	0	846	1596	0.264	0.499		0.499
E/B Right	0.0	0	0	0	0	0	0	0	0	0	0.000	0.000		
W/B Left	0.0	0	0	0	0	0	0	0	0	0	0.000	0.000		0.000
W/B Thru	3.0	4800	1267	918	0	0	0	0	1284	930	0.297	0.210	0.297	
W/B Right	0.0	0	141	76	0	0	0	0	143	77	0.000	0.000		
	ANALYSIS RESULTS :								Sum Of Critical V/C:				0.418	0.622
									Lost Time:				0.100	0.100
									Total V/C:				0.518	0.722
									Level Of Service:				A	C

ASSUMPTIONS AND METHODOLOGY

Existing Counts Year: 2015
Study Volume Year: 2020
Annual Growth Factor: 0.26 Percent

Lane Capacity
Single Through Lane = 1600 Vehicles Per Hour
Single Turn Lane = 1600 Vehicles Per Hour
Dual Turn Lane = 2880 Vehicles Per Hour

Level Of Service Definition

Total V/C	LOS
Under 0.605	A
0.605 - 0.704	B
0.705 - 0.804	C
0.805 - 0.904	D
0.905 - 1.004	E
Over 1.005	F

Lost time for signal Yellow and All red intervals: 0.10 of V/C Ratio

NOTES:

EVAN BROOKS ASSOCIATES, PASADENA, CALIFORNIA

INTERSECTION CAPACITY UTILIZATION ANALYSIS

Location: El Segundo Boulevard and Birch Avenue **City:** Hawthorne
Project No.: EBA2014-31 **Analyzed By:** MYR **File Name:** 2014-31-21 3

Problem Condition: Future 2020 Cumulative Traffic Volumes With Project
Existing Geometric Configuration

Movement	Available Lanes		Peak Hour Volumes								Movement V/C Per Lane		Critical V/C	
			Existing		Other Proj.		Project		Study Vol.					
	No.	Cap.	AM	PM	AM	PM	AM	PM	AM	PM	AM	PM	AM	PM
N/B Left	0.0	0	0	0	0	0	0	0	0	0	0.000	0.000		
N/B Thru	0.0	0	0	0	0	0	0	0	0	0	0.000	0.000	0.000	0.000
N/B Right	0.0	0	0	0	0	0	0	0	0	0	0.000	0.000	0.000	0.000
S/B Left	1.0	1600	146	195	0	0	21	66	169	263	0.105	0.165	0.105	0.165
S/B Thru	1.0	1600	0	0	0	0	0	0	0	0	0.079	0.131		
S/B Right	0.0	0	97	120	0	0	28	88	126	209	0.000	0.000		
E/B Left	1.0	1600	45	60	0	0	56	63	101	124	0.063	0.077	0.063	
E/B Thru	2.0	3200	835	1575	0	0	32	89	878	1684	0.274	0.526		0.526
E/B Right	0.0	0	0	0	0	0	0	0	0	0	0.000	0.000		
W/B Left	0.0	0	0	0	0	0	0	0	0	0	0.000	0.000		0.000
W/B Thru	3.0	4800	1267	918	0	0	69	70	1352	1000	0.320	0.234	0.320	
W/B Right	0.0	0	141	76	0	0	42	47	185	124	0.000	0.000		
	ANALYSIS RESULTS :								Sum Of Critical V/C:				0.489	0.691
									Lost Time:				0.100	0.100
									Total V/C:				0.589	0.791
									Level Of Service:				A	C

ASSUMPTIONS AND METHODOLOGY

Existing Counts Year: 2015
Study Volume Year: 2020
Annual Growth Factor: 0.26 Percent

Lane Capacity
Single Through Lane = 1600 Vehicles Per Hour
Single Turn Lane = 1600 Vehicles Per Hour
Dual Turn Lane = 2880 Vehicles Per Hour

Level Of Service Definition

Total V/C	LOS
Under 0.605	A
0.605 - 0.704	B
0.705 - 0.804	C
0.805 - 0.904	D
0.905 - 1.004	E
Over 1.005	F

Lost time for signal Yellow and All red intervals: 0.10 of V/C Ratio

NOTES:

EVAN BROOKS ASSOCIATES, PASADENA, CALIFORNIA

INTERSECTION CAPACITY UTILIZATION ANALYSIS

Location: El Segundo Boulevard and Birch Avenue **City:** Hawthorne
Project No.: EBA2014-31 **Analyzed By:** MYR **File Name:** 2014-31-21 5

Problem Condition: Future 2035 Cumulative Traffic Volumes Without Project
Existing Geometric Configuration

Movement	Available Lanes		Peak Hour Volumes								Movement V/C Per Lane		Critical V/C	
			Existing		Other Proj.		Project		Study Vol.					
	No.	Cap.	AM	PM	AM	PM	AM	PM	AM	PM	AM	PM	AM	PM
N/B Left	0.0	0	0	0	0	0	0	0	0	0	0.000	0.000		
N/B Thru	0.0	0	0	0	0	0	0	0	0	0	0.000	0.000	0.000	0.000
N/B Right	0.0	0	0	0	0	0	0	0	0	0	0.000	0.000	0.000	0.000
S/B Left	1.0	1600	146	195	0	0	0	0	174	241	0.109	0.151	0.109	0.151
S/B Thru	1.0	1600	0	0	0	0	0	0	0	0	0.072	0.093		
S/B Right	0.0	0	97	120	0	0	0	0	116	148	0.000	0.000		
E/B Left	1.0	1600	45	60	0	0	0	0	54	74	0.034	0.046	0.034	
E/B Thru	2.0	3200	835	1575	0	0	0	0	995	1947	0.311	0.608		0.608
E/B Right	0.0	0	0	0	0	0	0	0	0	0	0.000	0.000		
W/B Left	0.0	0	0	0	0	0	0	0	0	0	0.000	0.000		0.000
W/B Thru	3.0	4800	1267	918	0	0	0	0	1510	1135	0.350	0.256	0.350	
W/B Right	0.0	0	141	76	0	0	0	0	168	94	0.000	0.000		
	ANALYSIS RESULTS :								Sum Of Critical V/C:				0.492	0.759
									Lost Time:				0.100	0.100
									Total V/C:				0.592	0.859
									Level Of Service:				A	D

ASSUMPTIONS AND METHODOLOGY

Existing Counts Year: 2015
Study Volume Year: 2020 (2035 for Cumulative)
Annual Growth Factor: 0.26 Percent

Lane Capacity
Single Through Lane = 1600 Vehicles Per Hour
Single Turn Lane = 1600 Vehicles Per Hour
Dual Turn Lane = 2880 Vehicles Per Hour

Level Of Service Definition

Total V/C	LOS
Under 0.605	A
0.605 - 0.704	B
0.705 - 0.804	C
0.805 - 0.904	D
0.905 - 1.004	E
Over 1.005	F

Lost time for signal Yellow and All red intervals: 0.10 of V/C Ratio

NOTES:

EVAN BROOKS ASSOCIATES, PASADENA, CALIFORNIA

INTERSECTION CAPACITY UTILIZATION ANALYSIS

Location: El Segundo Boulevard and Birch Avenue **City:** Hawthorne
Project No.: EBA2014-31 **Analyzed By:** MYR **File Name:** 2014-31-21 4

Problem Condition: Future 2035 Cumulative Traffic Volumes With Project
Existing Geometric Configuration

Movement	Available Lanes		Peak Hour Volumes								Movement V/C Per Lane		Critical V/C	
			Existing		Other Proj.		Project		Study Vol.					
	No.	Cap.	AM	PM	AM	PM	AM	PM	AM	PM	AM	PM	AM	PM
N/B Left	0.0	0	0	0	0	0	0	0	0	0	0.000	0.000		
N/B Thru	0.0	0	0	0	0	0	0	0	0	0	0.000	0.000	0.000	0.000
N/B Right	0.0	0	0	0	0	0	0	0	0	0	0.000	0.000	0.000	0.000
S/B Left	1.0	1600	146	195	0	0	25	70	199	311	0.125	0.194	0.125	0.194
S/B Thru	1.0	1600	0	0	0	0	0	0	0	0	0.094	0.151		
S/B Right	0.0	0	97	120	0	0	34	93	150	241	0.000	0.000		
E/B Left	1.0	1600	45	60	0	0	80	52	133	127	0.083	0.079	0.083	
E/B Thru	2.0	3200	835	1575	0	0	37	70	1033	2017	0.323	0.630		0.630
E/B Right	0.0	0	0	0	0	0	0	0	0	0	0.000	0.000		
W/B Left	0.0	0	0	0	0	0	0	0	0	0	0.000	0.000		0.000
W/B Thru	3.0	4800	1267	918	0	0	78	55	1589	1190	0.378	0.276	0.378	
W/B Right	0.0	0	141	76	0	0	59	39	228	133	0.000	0.000		
	ANALYSIS RESULTS :								Sum Of Critical V/C:				0.586	0.825
									Lost Time:				0.100	0.100
									Total V/C:				0.686	0.925
									Level Of Service:				B	E

ASSUMPTIONS AND METHODOLOGY

Existing Counts Year: 2015
Study Volume Year: 2020 (2035 for Cumulative)
Annual Growth Factor: 0.26 Percent

Lane Capacity
Single Through Lane = 1600 Vehicles Per Hour
Single Turn Lane = 1600 Vehicles Per Hour
Dual Turn Lane = 2880 Vehicles Per Hour

Level Of Service Definition

Total V/C	LOS
Under 0.605	A
0.605 - 0.704	B
0.705 - 0.804	C
0.805 - 0.904	D
0.905 - 1.004	E
Over 1.005	F

Lost time for signal Yellow and All red intervals: 0.10 of V/C Ratio

NOTES:

EVAN BROOKS ASSOCIATES, PASADENA, CALIFORNIA

INTERSECTION CAPACITY UTILIZATION ANALYSIS

Location: El Segundo Boulevard and Birch Avenue **City:** Hawthorne
Project No.: EBA2014-31 **Analyzed By:** MYR **File Name:** 2014-31-21 7

Problem Condition: Future 2035 Cumulative Traffic Volumes With Project
Proposed Geomeric Conditions with Mitigation

Movement	Available Lanes		Peak Hour Volumes								Movement V/C Per Lane		Critical V/C	
			Existing		Other Proj.		Project		Study Vol.					
	No.	Cap.	AM	PM	AM	PM	AM	PM	AM	PM	AM	PM	AM	PM
N/B Left	0.0	0	0	0	0	0	0	0	0	0	0.000	0.000		
N/B Thru	0.0	0	0	0	0	0	0	0	0	0	0.000	0.000	0.000	0.000
N/B Right	0.0	0	0	0	0	0	0	0	0	0	0.000	0.000	0.000	0.000
S/B Left	2.0	2880	146	195	0	0	25	70	199	311	0.069	0.108	0.069	0.108
S/B Thru	0.0	0	0	0	0	0	0	0	0	0	0.000	0.000		
S/B Right	1.0	1600	97	120	0	0	34	93	150	241	0.010	0.072		
E/B Left	1.0	1600	45	60	0	0	80	52	133	127	0.083	0.079	0.083	
E/B Thru	2.0	3200	835	1575	0	0	37	70	1033	2017	0.323	0.630		0.630
E/B Right	0.0	0	0	0	0	0	0	0	0	0	0.000	0.000		
W/B Left	0.0	0	0	0	0	0	0	0	0	0	0.000	0.000		0.000
W/B Thru	3.0	4800	1267	918	0	0	78	55	1589	1190	0.378	0.276	0.378	
W/B Right	0.0	0	141	76	0	0	59	39	228	133	0.000	0.000		
	ANALYSIS RESULTS :								Sum Of Critical V/C:				0.531	0.738
									Lost Time:				0.100	0.100
									Total V/C:				0.631	0.838
									Level Of Service:				B	D

ASSUMPTIONS AND METHODOLOGY

Existing Counts Year: 2015
Study Volume Year: 2020 (2035 for Cumulative)
Annual Growth Factor: 0.26 Percent

Lane Capacity
Single Through Lane = 1600 Vehicles Per Hour
Single Turn Lane = 1600 Vehicles Per Hour
Dual Turn Lane = 2880 Vehicles Per Hour

Level Of Service Definition

Total V/C	LOS
Under 0.605	A
0.605 - 0.704	B
0.705 - 0.804	C
0.805 - 0.904	D
0.905 - 1.004	E
Over 1.005	F

Lost time for signal Yellow and All red intervals: 0.10 of V/C Ratio

NOTES:

EVAN BROOKS ASSOCIATES, PASADENA, CALIFORNIA

INTERSECTION CAPACITY UTILIZATION ANALYSIS

Location: Birch Avenue and 120th Street **City:** Hawthorne
Project No.: EBA2014-31 **Analyzed By:** MYR **File Name:** 2014-31-22 1

Problem Condition: Existing 2015 Traffic Conditions (Count Date: 9-16-15)
Existing Geometric Configuration

Movement	Available Lanes		Peak Hour Volumes								Movement V/C Per Lane		Critical V/C	
			Existing		Other Proj.		Project		Study Vol.					
	No.	Cap.	AM	PM	AM	PM	AM	PM	AM	PM	AM	PM	AM	PM
N/B Left	0.0	0	110	102	0	0	0	0	110	102	0.000	0.000	0.000	
N/B Thru	2.0	3200	71	48	0	0	0	0	71	48	0.071	0.093		0.093
N/B Right	0.0	0	45	146	0	0	0	0	45	146	0.000	0.000		
S/B Left	0.0	0	28	16	0	0	0	0	28	16	0.000	0.000		0.000
S/B Thru	1.0	1600	73	51	0	0	0	0	73	51	0.080	0.048	0.080	
S/B Right	0.0	0	27	10	0	0	0	0	27	10	0.000	0.000		
E/B Left	1.0	1600	5	11	0	0	0	0	5	11	0.003	0.007		
E/B Thru	2.0	3200	592	1132	0	0	0	0	592	1132	0.220	0.401	0.220	0.401
E/B Right	0.0	0	112	152	0	0	0	0	112	152	0.000	0.000		
W/B Left	1.0	1600	140	41	0	0	0	0	140	41	0.088	0.026	0.088	0.026
W/B Thru	2.0	3200	892	415	0	0	0	0	892	415	0.285	0.133		
W/B Right	0.0	0	21	12	0	0	0	0	21	12	0.000	0.000		
	ANALYSIS RESULTS :								Sum Of Critical V/C:				0.388	0.519
									Lost Time:				0.100	0.100
									Total V/C:				0.488	0.619
									Level Of Service:				A	B

ASSUMPTIONS AND METHODOLOGY

Existing Counts Year: 2015
Study Volume Year: 2015
Annual Growth Factor: 0.26 Percent

Lane Capacity
Single Through Lane = 1600 Vehicles Per Hour
Single Turn Lane = 1600 Vehicles Per Hour
Dual Turn Lane = 2880 Vehicles Per Hour

Level Of Service Definition

Total V/C	LOS
Under 0.605	A
0.605 - 0.704	B
0.705 - 0.804	C
0.805 - 0.904	D
0.905 - 1.004	E
Over 1.005	F

Lost time for signal Yellow and All red intervals: 0.10 of V/C Ratio

NOTES:

EVAN BROOKS ASSOCIATES, PASADENA, CALIFORNIA

INTERSECTION CAPACITY UTILIZATION ANALYSIS

Location: Birch Avenue and 120th Street **City:** Hawthorne
Project No.: EBA2014-31 **Analyzed By:** MYR **File Name:** 2014-31-22 2

Problem Condition: Future 2020 Traffic Volumes with Ambient Growth
Existing Geometric Configuration

Movement	Available Lanes		Peak Hour Volumes								Movement V/C Per Lane		Critical V/C	
			Existing		Other Proj.		Project		Study Vol.					
	No.	Cap.	AM	PM	AM	PM	AM	PM	AM	PM	AM	PM	AM	PM
N/B Left	0.0	0	110	102	0	0	0	0	111	103	0.000	0.000	0.000	
N/B Thru	2.0	3200	71	48	0	0	0	0	72	49	0.072	0.094		0.094
N/B Right	0.0	0	45	146	0	0	0	0	46	148	0.000	0.000		
S/B Left	0.0	0	28	16	0	0	0	0	28	16	0.000	0.000		0.000
S/B Thru	1.0	1600	73	51	0	0	0	0	74	52	0.081	0.049	0.081	
S/B Right	0.0	0	27	10	0	0	0	0	27	10	0.000	0.000		
E/B Left	1.0	1600	5	11	0	0	0	0	5	11	0.003	0.007		
E/B Thru	2.0	3200	592	1132	0	0	0	0	600	1147	0.223	0.406	0.223	0.406
E/B Right	0.0	0	112	152	0	0	0	0	113	154	0.000	0.000		
W/B Left	1.0	1600	140	41	0	0	0	0	142	42	0.089	0.026	0.089	0.026
W/B Thru	2.0	3200	892	415	0	0	0	0	904	420	0.289	0.135		
W/B Right	0.0	0	21	12	0	0	0	0	21	12	0.000	0.000		
	ANALYSIS RESULTS :								Sum Of Critical V/C:				0.393	0.526
									Lost Time:				0.100	0.100
									Total V/C:				0.493	0.626
									Level Of Service:				A	B

ASSUMPTIONS AND METHODOLOGY

Existing Counts Year: 2015
Study Volume Year: 2020
Annual Growth Factor: 0.26 Percent

Lane Capacity
Single Through Lane = 1600 Vehicles Per Hour
Single Turn Lane = 1600 Vehicles Per Hour
Dual Turn Lane = 2880 Vehicles Per Hour

Level Of Service Definition

Total V/C	LOS
Under 0.605	A
0.605 - 0.704	B
0.705 - 0.804	C
0.805 - 0.904	D
0.905 - 1.004	E
Over 1.005	F

Lost time for signal Yellow and All red intervals: 0.10 of V/C Ratio

NOTES:

EVAN BROOKS ASSOCIATES, PASADENA, CALIFORNIA

INTERSECTION CAPACITY UTILIZATION ANALYSIS

Location: Birch Avenue and 120th Street **City:** Hawthorne
Project No.: EBA2014-31 **Analyzed By:** MYR **File Name:** 2014-31-22 3

Problem Condition: Future 2020 Cumulative Traffic Volumes With Project
Existing Geometric Configuration

Movement	Available Lanes		Peak Hour Volumes								Movement V/C Per Lane		Critical V/C	
			Existing		Other Proj.		Project		Study Vol.					
	No.	Cap.	AM	PM	AM	PM	AM	PM	AM	PM	AM	PM	AM	PM
N/B Left	0.0	0	110	102	0	0	0	0	111	103	0.000	0.000	0.000	
N/B Thru	2.0	3200	71	48	0	0	0	0	72	49	0.076	0.107		0.107
N/B Right	0.0	0	45	146	0	0	13	44	59	192	0.000	0.000		
S/B Left	0.0	0	28	16	0	0	0	0	28	16	0.000	0.000		0.000
S/B Thru	1.0	1600	73	51	0	0	0	0	74	52	0.081	0.049	0.081	
S/B Right	0.0	0	27	10	0	0	0	0	27	10	0.000	0.000		
E/B Left	1.0	1600	5	11	0	0	0	0	5	11	0.003	0.007		
E/B Thru	2.0	3200	592	1132	0	0	23	69	623	1215	0.239	0.438	0.239	0.438
E/B Right	0.0	0	112	152	0	0	28	32	142	186	0.000	0.000		
W/B Left	1.0	1600	140	41	0	0	28	32	170	73	0.106	0.046	0.106	0.046
W/B Thru	2.0	3200	892	415	0	0	50	51	953	472	0.305	0.151		
W/B Right	0.0	0	21	12	0	0	0	0	21	12	0.000	0.000		
	ANALYSIS RESULTS :								Sum Of Critical V/C:				0.426	0.591
									Lost Time:				0.100	0.100
									Total V/C:				0.526	0.691
									Level Of Service:				A	B

ASSUMPTIONS AND METHODOLOGY

Existing Counts Year: 2015
Study Volume Year: 2020
Annual Growth Factor: 0.26 Percent

Lane Capacity
Single Through Lane = 1600 Vehicles Per Hour
Single Turn Lane = 1600 Vehicles Per Hour
Dual Turn Lane = 2880 Vehicles Per Hour

Level Of Service Definition

Total V/C	LOS
Under 0.605	A
0.605 - 0.704	B
0.705 - 0.804	C
0.805 - 0.904	D
0.905 - 1.004	E
Over 1.005	F

Lost time for signal Yellow and All red intervals: 0.10 of V/C Ratio

NOTES:

EVAN BROOKS ASSOCIATES, PASADENA, CALIFORNIA

INTERSECTION CAPACITY UTILIZATION ANALYSIS

Location: Birch Avenue and 120th Street **City:** Hawthorne
Project No.: EBA2014-31 **Analyzed By:** MYR **File Name:** 2014-31-22 5

Problem Condition: Future 2035 Cumulative Traffic Volumes Without Project
Existing Geometric Configuration

Movement	Available Lanes		Peak Hour Volumes								Movement V/C Per Lane		Critical V/C	
			Existing		Other Proj.		Project		Study Vol.					
	No.	Cap.	AM	PM	AM	PM	AM	PM	AM	PM	AM	PM	AM	PM
N/B Left	0.0	0	110	102	0	0	0	0	131	126	0.000	0.000	0.000	
N/B Thru	2.0	3200	71	48	0	0	0	0	85	59	0.084	0.114		0.114
N/B Right	0.0	0	45	146	0	0	0	0	54	180	0.000	0.000		
S/B Left	0.0	0	28	16	0	0	0	0	33	20	0.000	0.000		0.000
S/B Thru	1.0	1600	73	51	0	0	0	0	87	63	0.095	0.059	0.095	
S/B Right	0.0	0	27	10	0	0	0	0	32	12	0.000	0.000		
E/B Left	1.0	1600	5	11	0	0	0	0	6	14	0.004	0.008		
E/B Thru	2.0	3200	592	1132	0	0	0	0	706	1399	0.262	0.496	0.262	0.496
E/B Right	0.0	0	112	152	0	0	0	0	134	188	0.000	0.000		
W/B Left	1.0	1600	140	41	0	0	0	0	167	51	0.104	0.032	0.104	0.032
W/B Thru	2.0	3200	892	415	0	0	0	0	1063	513	0.340	0.165		
W/B Right	0.0	0	21	12	0	0	0	0	25	15	0.000	0.000		
	ANALYSIS RESULTS :								Sum Of Critical V/C:				0.462	0.642
									Lost Time:				0.100	0.100
									Total V/C:				0.562	0.742
									Level Of Service:				A	C

ASSUMPTIONS AND METHODOLOGY

Existing Counts Year: 2015
Study Volume Year: 2020 (2035 for Cumulative)
Annual Growth Factor: 0.26 Percent

Lane Capacity
Single Through Lane = 1600 Vehicles Per Hour
Single Turn Lane = 1600 Vehicles Per Hour
Dual Turn Lane = 2880 Vehicles Per Hour

Level Of Service Definition

Total V/C	LOS
Under 0.605	A
0.605 - 0.704	B
0.705 - 0.804	C
0.805 - 0.904	D
0.905 - 1.004	E
Over 1.005	F

Lost time for signal Yellow and All red intervals: 0.10 of V/C Ratio

NOTES:

EVAN BROOKS ASSOCIATES, PASADENA, CALIFORNIA

INTERSECTION CAPACITY UTILIZATION ANALYSIS

Location: Birch Avenue and 120th Street **City:** Hawthorne
Project No.: EBA2014-31 **Analyzed By:** MYR **File Name:** 2014-31-22 4

Problem Condition: Future 2035 Cumulative Traffic Volumes With Project
Existing Geometric Configuration

Movement	Available Lanes		Peak Hour Volumes								Movement V/C Per Lane		Critical V/C	
			Existing		Other Proj.		Project		Study Vol.					
	No.	Cap.	AM	PM	AM	PM	AM	PM	AM	PM	AM	PM	AM	PM
N/B Left	0.0	0	110	102	0	0	0	0	131	126	0.000	0.000	0.000	
N/B Thru	2.0	3200	71	48	0	0	0	0	85	59	0.089	0.129		0.129
N/B Right	0.0	0	45	146	0	0	17	46	70	227	0.000	0.000		
S/B Left	0.0	0	28	16	0	0	0	0	33	20	0.000	0.000		0.000
S/B Thru	1.0	1600	73	51	0	0	0	0	87	63	0.095	0.059	0.095	
S/B Right	0.0	0	27	10	0	0	0	0	32	12	0.000	0.000		
E/B Left	1.0	1600	5	11	0	0	0	0	6	14	0.004	0.008		
E/B Thru	2.0	3200	592	1132	0	0	24	63	730	1462	0.282	0.524	0.282	0.524
E/B Right	0.0	0	112	152	0	0	40	26	174	214	0.000	0.000		
W/B Left	1.0	1600	140	41	0	0	40	26	207	77	0.130	0.048	0.130	0.048
W/B Thru	2.0	3200	892	415	0	0	52	39	1116	552	0.356	0.177		
W/B Right	0.0	0	21	12	0	0	0	0	25	15	0.000	0.000		
	ANALYSIS RESULTS :								Sum Of Critical V/C:				0.507	0.701
									Lost Time:				0.100	0.100
									Total V/C:				0.607	0.801
									Level Of Service:				B	C

ASSUMPTIONS AND METHODOLOGY

Existing Counts Year: 2015
Study Volume Year: 2020 (2035 for Cumulative)
Annual Growth Factor: 0.26 Percent

Lane Capacity
Single Through Lane = 1600 Vehicles Per Hour
Single Turn Lane = 1600 Vehicles Per Hour
Dual Turn Lane = 2880 Vehicles Per Hour

Level Of Service Definition

Total V/C	LOS
Under 0.605	A
0.605 - 0.704	B
0.705 - 0.804	C
0.805 - 0.904	D
0.905 - 1.004	E
Over 1.005	F

Lost time for signal Yellow and All red intervals: 0.10 of V/C Ratio

NOTES:

EVAN BROOKS ASSOCIATES, PASADENA, CALIFORNIA