# AC-DC 5V2A SMPS IC

## CDD19F

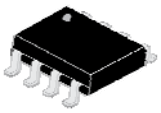

SOP-8

**SOP-8**
**Surface Mount**
**Plastic Package**
**RoHS compliant**

## GENERAL DESCRIPTION

CDD19F is a cost effective, high performance offline PSR, AC-DC SMPS converter especially designed for charger/adapter applications. Patented self power supply system can save the auxiliary winding of the transformer. Hence minimal peripheral components count can be achieved, which can significantly save total BOM cost. Constant Current (CC) and Constant Voltage (CV) control is integrated inside to meet the demand of typical charger application. SOP-8 packaging with isolated HV-LV pins can assure large creepage distance and operation safety under high humidity environment. This demo board can meet the energy star Lv.6 standard with comprehensive protections coverage including over temperature protection, over load protection, over current protection, cycle-by cycle current limiting, VCC over/under voltage lockout protection and so on. This application note describes universal 90~300VAC input with 10Watt (5V2000mA) output using off-line fly-back converter structure especially for charger applications. With CDD19F excellent performance and sophisticated application design, this demo board can achieve high efficiency, low standby consumption with nice load regulation and dynamic response. It helps designers in reducing design peripheral components, which makes the over all system cost effective and suitable for high performance application.

## FEATURES

1. Transformer Two Windings
2. <±3% Load Regulation
3. Low Ripple Voltage
4. Output Diode Abnormal Protection
5. Output short-circuit/overload protection
6. <75mW Standby Power Consumption
7. Ultra Low Overall BOM Cost

## APPLICATIONS

1. Small Power Adapter
2. Cell Phone Charger
3. Digital Cameras Charger
4. Linear Regulator/RCC Replacement

## PIN CONFIGURATION

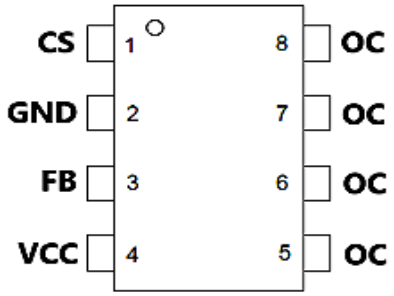


| Pin No. | Pin Name | Description |
|---|---|---|
| 1 | CS | Current sense pin |
| 2 | GND | Ground |
| 3 | FB | Primary side feedback pin |
| 4 | VCC | Power supply pin. |
| 5,6,7,8, | HVC | HV power BJT collector pin |

## Simplified Application

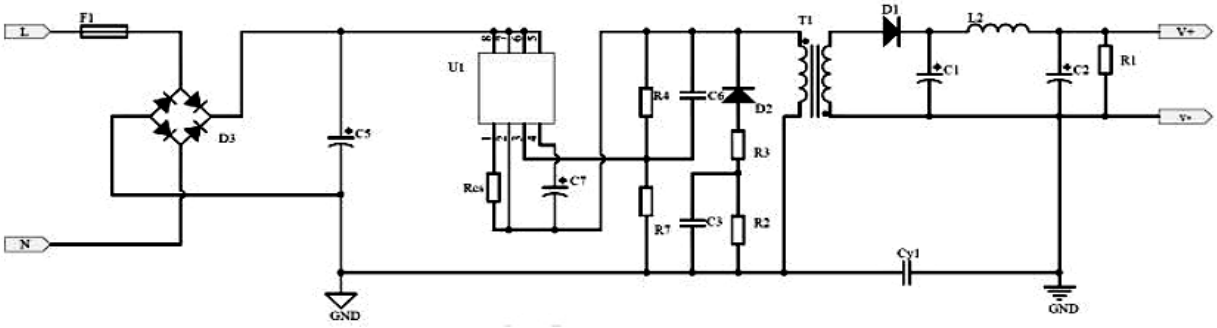


### Ordering and Marking Information

| P/No | Package | Top Marking |
|---|---|---|
| CDD19F | SOP8, Pb-free | DK910 |

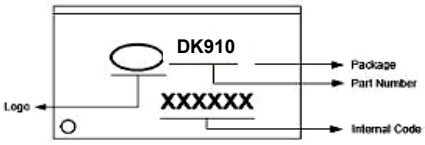


### Absolute Maximum Ratings

| Symbol | Description | Value | Units |
|---|---|---|---|
| VCBO | Power Transistor Breakdown Voltage | 800 | V |
| Vcc | Power Supply Voltage | -0.3 to 8 | V |
| VFB,VCS | FB,CS Input Voltage | -0.3 to Vcc+0.3V | V |
| TJ | Operating Junction Temperature | -40 to 150 | °C |
| TSTORAGE | Min/Max Storage Temperature | -55 to 150 | °C |
| TL | Lead Temperature (Soldering. 10secs) | 280 | °C |

**Note** Stresses beyond those listed under absolute maximum ratings may cause permanent damage to the device. These are stress ratings only. Functional operation of the device at these or any other conditions beyond those indicated under recommended operating conditions is not implied. Exposure to absolute maximum-rated conditions for extended periods may affect device reliability.

## SPECIFICATIONS

| Parameter | Symbol | Min | Typ. | Max | Unit | Note: |
|---|---|---|---|---|---|---|
| **Input Specification** | | | | | | |
| Input Voltage | $V_{IN}$ | 90 | | 300 | VAC | |
| Input Frequency | F | 47 | 50 | 63 | Hz | |
| **Output Specification** | | | | | | |
| No-load Output Voltage | VOUT_ NO_LOAD | 5.0 | | 5.17 | V | Line End Voltage |
| Load Output Voltage | VOUT_LOAD | 4.75 | | 5.25 | V | Line End Voltage |
| Rated Output Voltage | $V_{OUT}$ | | 5 | | | |
| Rated Output Current | $I_{OUT}$ | | 2000 | | mA | 230VAC Input |
| Over Current Point | $I_{OUT_MAX}$ | 2 | | 2.4 | A | |
| **Electrical Characteristics** | | | | | | |
| Standby Power | $P_{STANDBY}$ | 42 | | 75 | mW | 230VAC Input |
| Output Voltage Ripple | $V_{RIPPLE}$ | | 98 | | mVPP | |
| Efficiency | η | | 77.71 | | % | 230VAC Input, Line End |
| Linear Regulation | ΔV/V | | | 3 | % | |
| Start-up Duration | $T_{START}$ | | | 161 | mS | 90VAC Input |
| Ambient Temperature | $T_{AMB}$ | 0 | 25 | 45 | °C | |

**DEMO BOARD TEST RESULT**

| Demo Board | CDD19F 5V2A IN_5V2000C |
|---|---|
| Testing Date | 8/7/2019 |
| Testing Ambient Temperature | 25°C |
| Testing Equipment | AC Power Supply - Wocen AC Power Source (BP9905) |
| | Electronic Load - ITECH (IT8732) |
| | Power Meter – Sunjot (SJ9913) |
| | Oscilloscope – Tektronix (TBS2000) |
| | Multimeter - Fluke (17B+) |
| Testing Item | Input Current |
| | Standby Power Consumption |
| | Efficiency |
| | I-V Curve |
| | Line Regulation |
| | Start-up Duration |
| | Output Voltage Hold Duration |
| | Output Voltage Rise Duration |
| | Output Voltage Ripple and Noise |
| | Over-current Protection |
| | Short-circuit Protection |
| | Power BJT and Output Diode Voltage Stress |
| | Dynamic Load Testing |
| | EMC Testing |
| | Thermal Measurement |

## BLOCK DIAGRAM

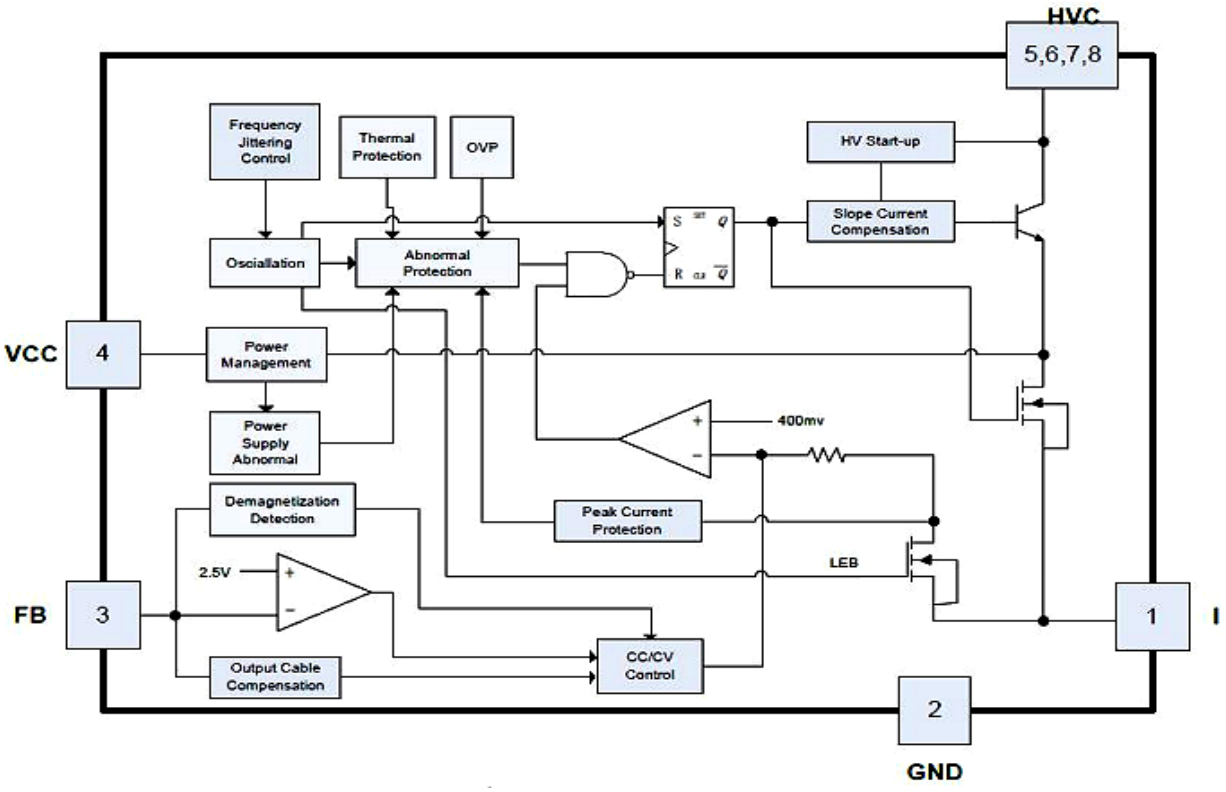

## ELECTRIC CHARACTERISTICS ($T_A$=25ºC Unless otherwise specified)

| Parameter | Symbol | Test Condition | Min | Typ | Max | Unit |
|---|---|---|---|---|---|---|
| **Supply Voltage Related** | | | | | | |
| $V_{CC}$ Operation Voltage | $V_{CC}$ | 85~265VAC Input | 4.3 | 5.0 | 5.5 | V |
| $V_{CC}$ Start-up Voltage | $V_{CC_START}$ | | 4.7 | 5.3 | 5.8 | |
| $V_{CC}$ Under Voltage Lockout | $V_{CC_UVLO}$ | | 3.1 | 3.5 | 3.9 | |
| $V_{CC}$ Over Voltage Protection | $V_{CC_OVP}$ | | 6.0 | 6.3 | 6.6 | |
| $V_{CC}$ Operation Current | $IV_{CC_OP}$ | $V_{CC}$=5V, $V_{FB}$=2V | -- | -- | 100 | mA |
| HV Start-up Current | $I_{START_UP}$ | 265VAC Input | -- | -- | 0.5 | |
| Start-up Duration | $T_{START_UP}$ | 85VAC Input | -- | -- | 500 | mS |
| **Current Sense Related** | | | | | | |
| CS Max Turn-on Voltage | $V_{CS_MAX}$ | VCC=5V | -- | 400 | -- | mV |
| CS Min Turn-on Voltage | $V_{CS_MIN}$ | | -- | 160 | -- | |
| **Feedback Control Related** | | | | | | |
| Ref. Voltage for Feedback | $V_{REF_FB}$ | VCC=5V | 2.45 | 2.5 | 2.55 | V |
| Operation Frequency | $F_{SW}$ | | 16 | 65 | 80 | KHz |
| Minimum Turn-on Duration | $T_{ON_MIN}$ | | -- | 500 | -- | nS |
| **Protection Related** | | | | | | |
| Short-circuit Protection Threshold | $V_{SHORT_PRO}$ | $V_{CC}$=5V | -- | 1.2 | -- | V |
| Open-circuit Protection Threshold | $V_{OPEN_PRO}$ | | -- | 3.8 | -- | V |
| Protection Temperature | $T_{PRO}$ | | 135 | 145 | 155 | º C |

## Typical Application

### Demo Board Pictures

Top view

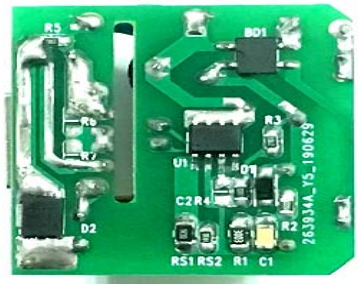

Bottom View

### Typical Schematic diagram of Demo Board

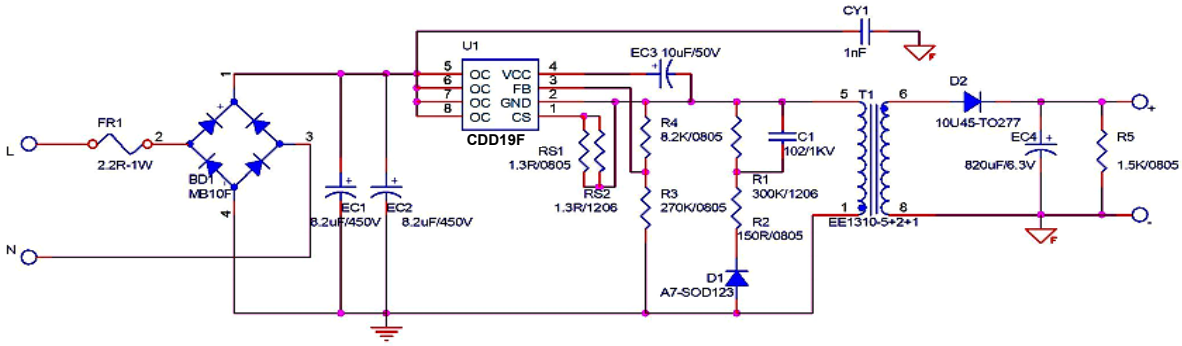


## Demo Board PCB layout

Top Layer

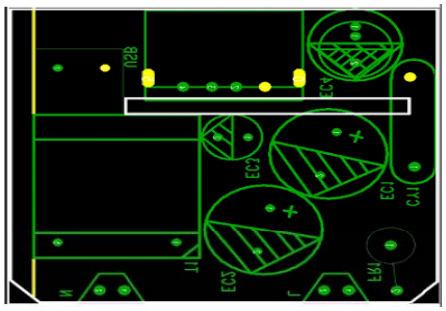

Bottom Layer

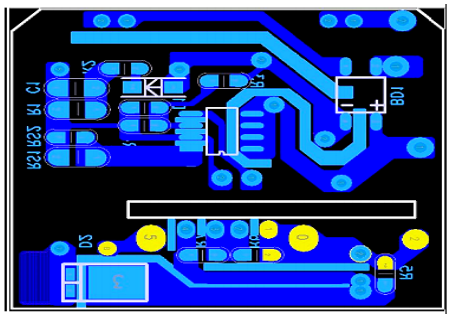

## Bill of Material of Demo Board

| Sl. No. | Items | Description | Qty. | Circuit Code |
|---|---|---|---|---|
| 1 | PCB | Single Sided 32.45mm*35.8mm*1.2mm, FR-1 UV94 | 1 | |
| 2 | USB Base | USB AF 90 , L=10mm | 1 | USB |
| 3 | AC Shrapnel | AC Shrapnel | 2 | L,N |
| 4 | Safety Resistor | 2.2R/1W Wire Wound Safety Resistor/4*11mm | 1 | FR1 |
| 5 | Electrolytic Capacitor | 450V/8.2uF/20%/ϕ10*14mm | 2 | EC1,EC2 |
| 6 | Electrolytic Capacitor | 10uF/50V/ϕ5*11mm (High Freq., Low Res.) | 1 | EC3 |
| 7 | Electrolytic Capacitor | 820uF/6.3V/ϕ6.3*9mm (Solid Capacitor) | 1 | EC4 |
| 8 | Y Capacitor | 1nF/400V, P=10mm | 1 | CY1 |
| 9 | Transformer | EE1310(5+2+1) Vertical Bobbin, 1.05mH | 1 | T1 |
| 10 | Bridge Rectifier | MB10F, 0.8A | 1 | BD1 |
| 11 | Diode | A7/SOD-123 | 1 | D1 |
| 12 | Schottky Diode | 10U45/TO-277 | 1 | D2 |
| 13 | Ceramic Capacitor | 1nF/1000V/1206 | 1 | C1 |
| 14 | Chip Capacitor | NC | 0 | C2 |
| 15 | Chip Resistor | 300K/5%/1206 | 1 | R1 |
| 16 | Chip Resistor | 150R/5%/0805 | 1 | R2 |
| 17 | Chip Resistor | 270K/1%/0805 | 1 | R3 |
| 18 | Chip Resistor | 8.2K/1%/0805 | 0 | R4 |
| 19 | Chip Resistor | 1.5K/5%/0805 | 1 | R5 |
| 20 | Chip Resistor | NC | 0 | R6 |
| 21 | Chip Resistor | NC | 0 | R7 |
| 22 | Chip Resistor | 1.2R/1%/1206 | 1 | RS1 |
| 23 | Chip Resistor | 1.3R/1%/0805 | 1 | RS2 |
| 24 | IC | CDD19F-SOP8 | 1 | U1 |

## TRANSFORMER CONSTRUCTION

| Bobbin Type | Pin Number | Pin Distance | Row Distance | Note |
|---|---|---|---|---|
| EE1310 | 5+2+1 | 2.5mm, 4mm | 19.5mm | Vertical |

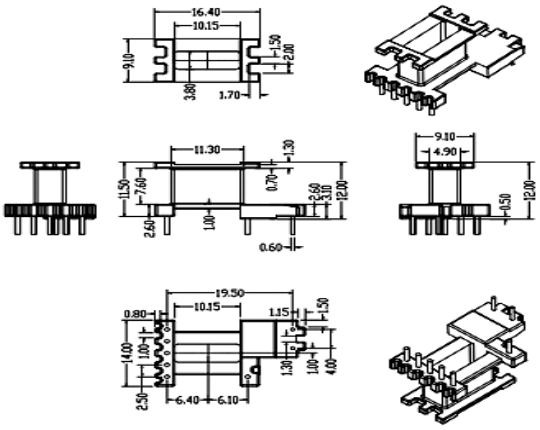

**Transformer Schematic**

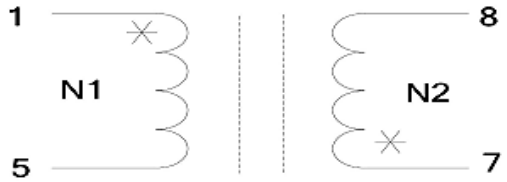


**Transformer Winding Diagram**

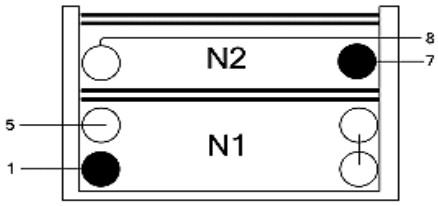


| Winding | Start | Stop | Winding process | No. of Turns | Wire size |
|---|---|---|---|---|---|
| N1 | Pin 1 | Pin 5 | Enamel-insulated wire, two layers | 65 | 2UEW ϕ0.2mm*1P |
| N2 | Pin 7 | Pin 8 | Three-layer insulated wire, one layer | 4 | TIW-B ϕ0.7mm*1P |

**Notes:**

1.Core: TDK PC40

2. Bobbin: EE1310, 5+2+1 Vertical

3. Wrap yellow PET film Mylar tape around every winding. After closing the core, wrap two layers of yellow Mylar tape equal to the width of the core

4. Pay attention to the direction when winding. The winding must be smooth

5. Magnetic core with air gap, vacuum oil immersion, oven drying

6. Wrap two layers of yellow Mylar around the bobbin of the finished transformer with 5V2A label on top for easy distinction

7. Remove pin 2,3,4,6

**Electrical Requirement**

| Parameter | Requirement | Note |
|---|---|---|
| Inductance | LP(N1)=1.05mH±5% | 10KHz, 0.3V |
| Leakage Inductance | LS(N1)<40uH | 10KHz, 0.3V, short other pins |
| Pri(N1)-Sec(N2) Pressure Testing | 3750VAC | 5mA/5S |
| Pri(N1)/Sec(N2) – Core Pressure Testing | 1500VAC | 5mA/5S |

## Test Data of Demo Board

### A. Input Current

| Input Voltage | Input Current(mA) | Testing Condition |
|---|---|---|
| 90VAC/60Hz | 250.8 | Full-load Output |
| 264VAC/50Hz | 101.1 | |

### B. Standby Power Consumption

| Input Voltage | Input Power(mW) | Standard Requirement(mW) | Testing Condition |
|---|---|---|---|
| 115VAC/60Hz | 44 | 75 | No-load Output |
| 230VAC/50Hz | 70 | | |

### C. Efficiency

**Efficiency with Different Input Voltage**

| Input Voltage | Input Power(W) | Output Power(W) | Efficiency (%) | Testing Condition |
|---|---|---|---|---|
| 90VAC/60Hz | 13.08 | 9.9 | 75.69 | Full-load Output, Line-end, 20AWG, 1-meter-long |
| 115VAC/60Hz | 13.17 | 10.16 | 77.15 | |
| 230VAC/50Hz | 13.11 | 10.17 | 77.57 | |
| 300VAC/50Hz | 13.29 | 10.2 | 76.75 | |

**Average Efficiency under Different Load Condition (Board-end & Line-end)**

| Input Voltage | Board-end Efficiency (%) | | | | | |
|---|---|---|---|---|---|---|
| | 25% Load | 50% Load | 75% Load | 100% Load | Average | CoC Tier2 |
| 115VAC/60Hz | 81.27 | 80.31 | 80.24 | 80.33 | 80.54 | 78.6 |
| 230VAC/50Hz | 80.29 | 80.53 | 80.57 | 80.58 | 80.49 | |
| **Input Voltage** | **Line-end Efficiency (%)** | | | | | |
| | **25% Load** | **50% Load** | **75% Load** | **100% Load** | **Average** | **CoC Tier2** |
| 115VAC/60Hz | 80.79 | 78.92 | 78.24 | 77.5 | 78.86 | 78.6 |
| 230VAC/50Hz | 80.06 | 79.29 | 78.48 | 77.71 | 78.89 | |

### D. Voltage Regulation

According to the table below, line regulation and load regulation can be calculated, line-end result, 20AWG, 1-meter-long:

| Input Voltage | 0% Load | 25% Load | 50% Load | 75% Load | 100% Load | Load Regulation |
|---|---|---|---|---|---|---|
| 90VAC/60Hz | 5.13V | 5.03V | 4.98V | 5V | 5.03V | ±1.5% |
| 115VAC/60Hz | 5.17V | 5.07V | 5.01V | 5.02V | 5.06V | ±1.6% |
| 230VAC/50Hz | 5.15V | 4.96V | 5V | 5.02V | 5.06V | ±1.92% |
| 300VAC/50Hz | 5.16V | 4.93V | 5V | 5.03V | 5.06V | ±2.33% |
| Line Regulation | ±0.39% | ±1.42% | ±0.2% | ±0.3% | ±0.3% | |

## E. I-V Curve

**115VAC Input I-V Curve**

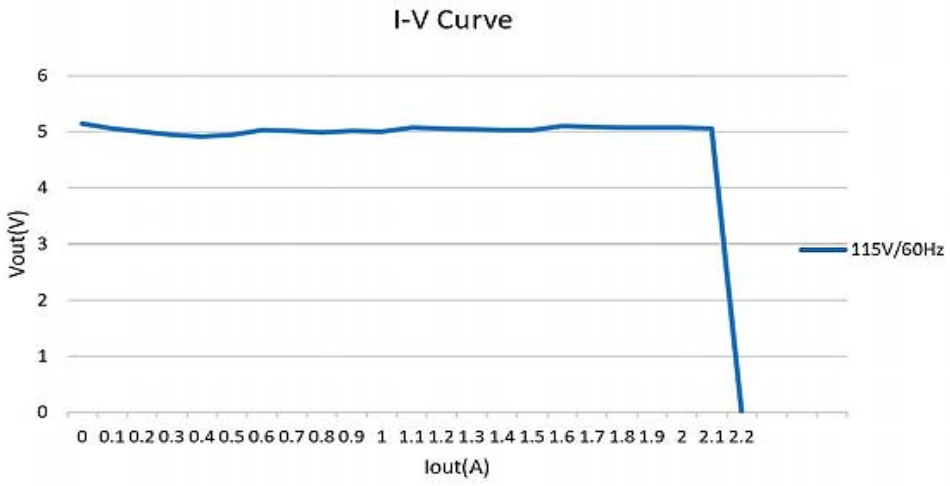


**230VAC Input I-V Curve**

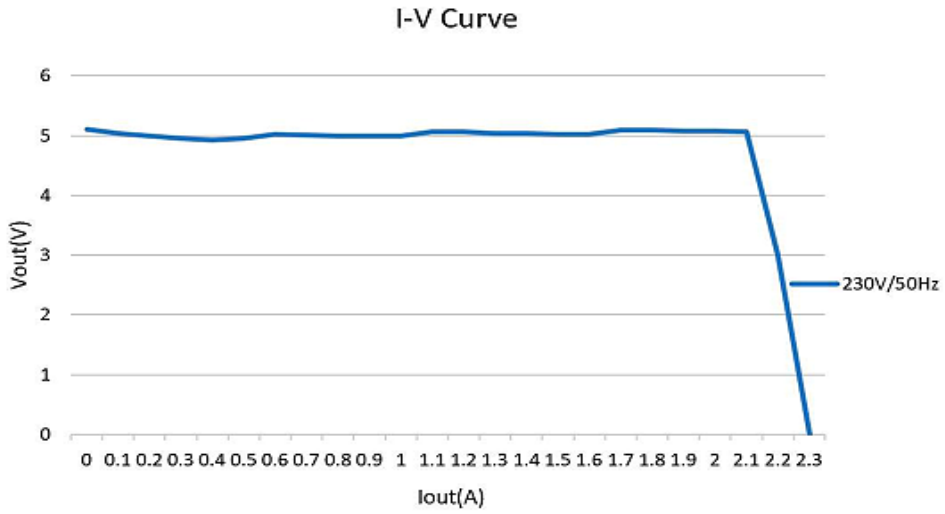

**Start-up Duration**

Full load test condition, measuring the time interval between start-up and output voltage steady state:

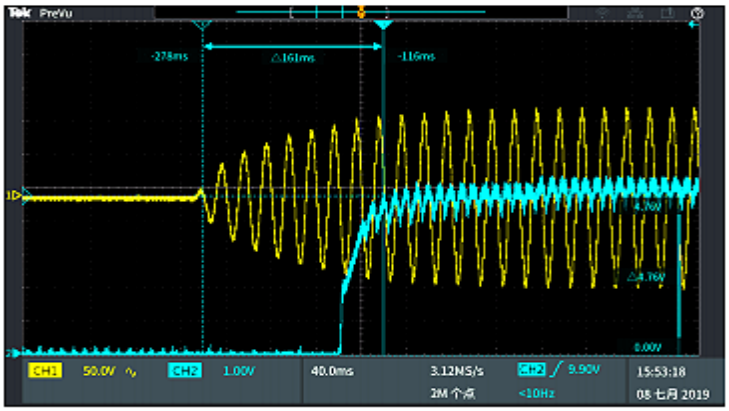


90VAC/60Hz: 161mS

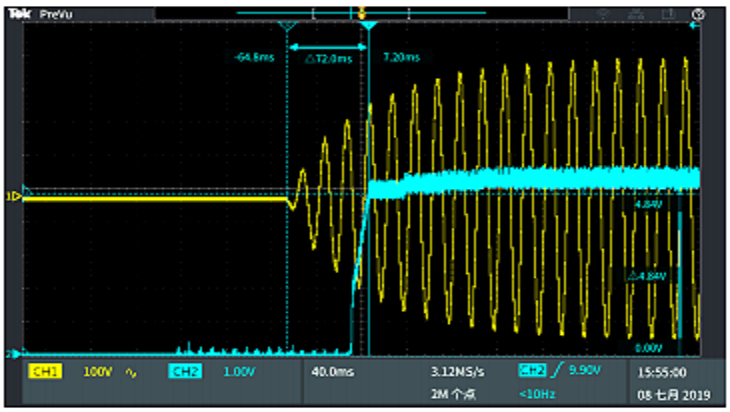


300VAC/50Hz: 72mS

**Output Voltage Hold Duration**

Full load test condition, the time duration required for output voltage to drop from 100% to 90% after shut down the system

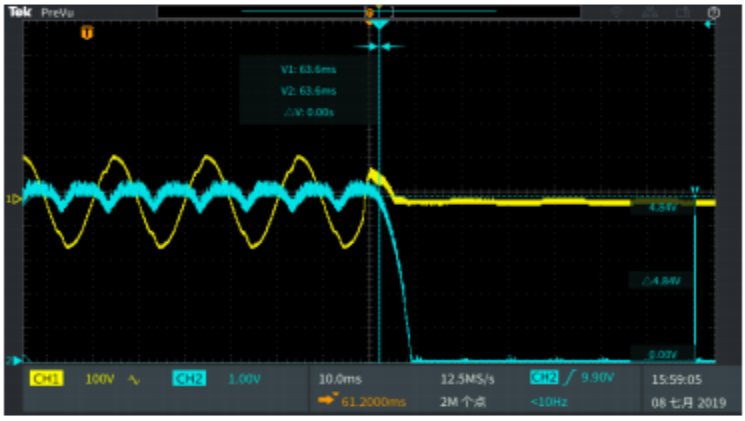


90VAC/60Hz: 0mS

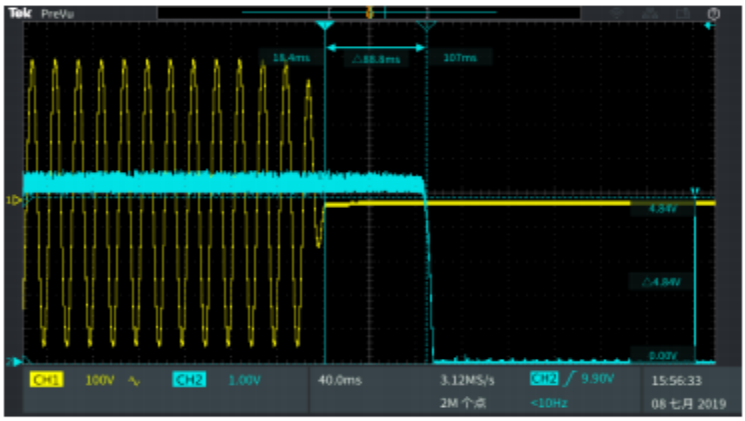


300VAC/50Hz: 88.8mS

**Output Voltage Rise Duration**

Full load and no load test condition, the time duration required for the output voltage to rise from10% to 90%:

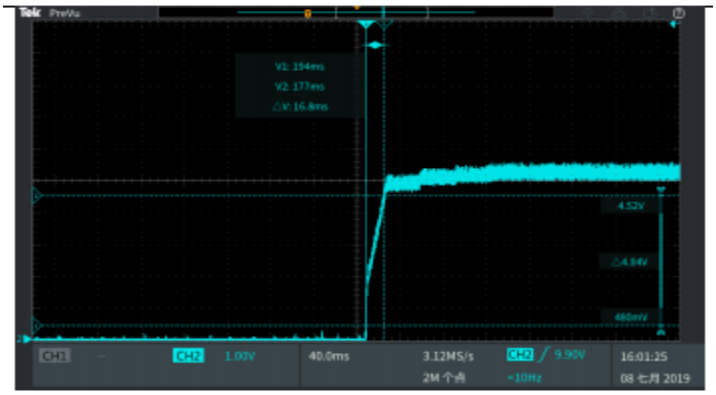


115VAC/60Hz: 16.8mS – Full Load

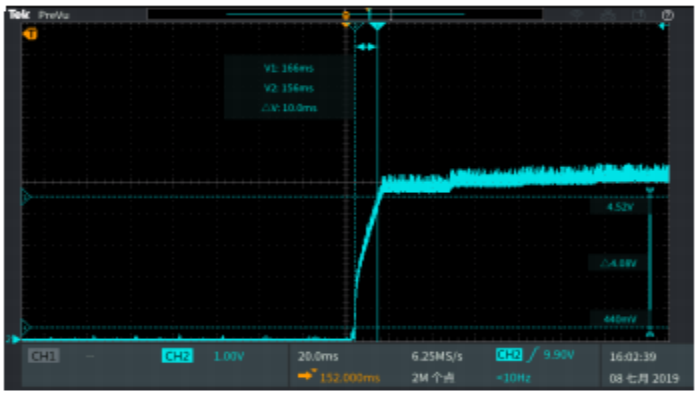


230VAC/50Hz: 10mS -Full Load

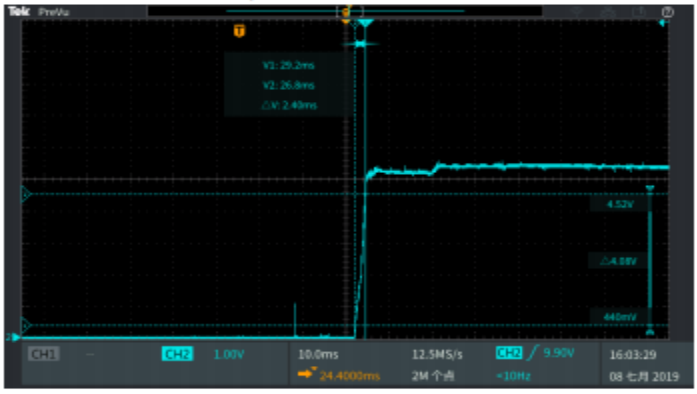


115VAC/60Hz: 2.4mS – No Load

**Over-current Protection**

**Over-current Protection**

| Input Voltage | Output Over-current Point(A) | Over-current Recovery Point(A) |
|---|---|---|
| 90V/60Hz | 2.12 | 2.08 |
| 300V/50Hz | 2.25 | 2.21 |

**Short-circuit Protection**

Full-load test condition, measuring the Drain-Source wave form of the MOSFET when shorting the output and remove the short:

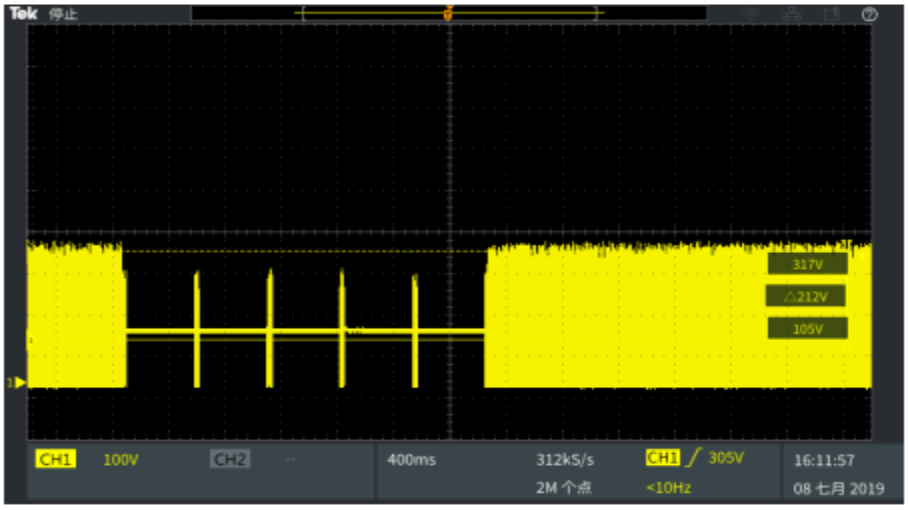


90VAC/60Hz Drain-Source Wave Form Auto Recovery After Short the Output

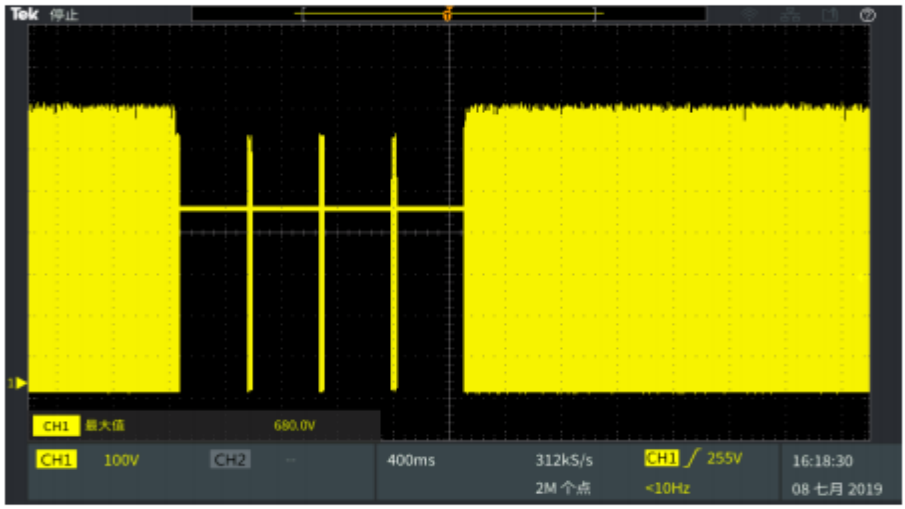


300VAC/50Hz Drain-Source Wave Form Auto Recovery After Short the Output

**Power BJT and Output Diode Voltage Stress**

Full-load and 300VAC input test condition, measuring the voltage stress across the Drain-Source of the MOSFET and the output diode:

300VAC/50Hz, Drain-Source of MOSFET Voltage Stress: 665V

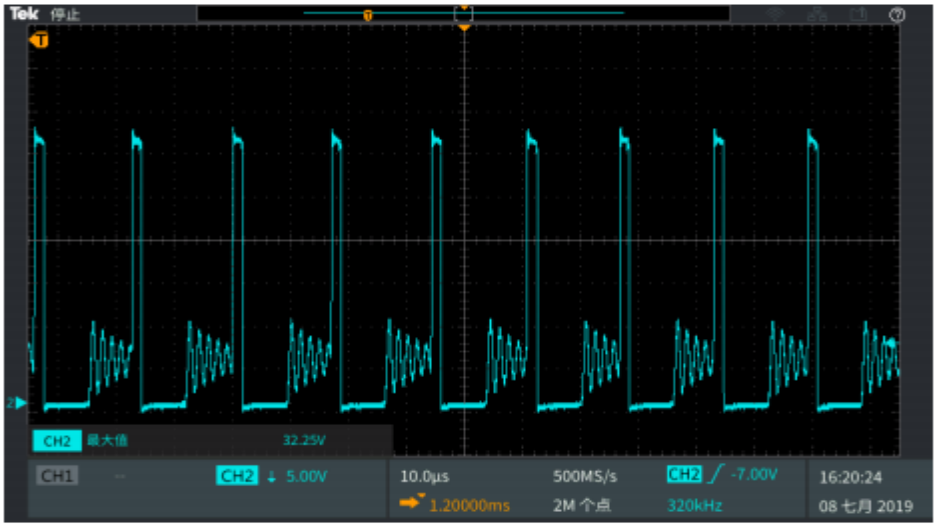


300VAC/50Hz, Output Diode Voltage Stress: 32.25V

**Dynamic Load Testing**

**Test Condition:** 115VAC/60Hz, 230VAC/50Hz
**Test Frequency:** 100Hz@50% Duty Cycle
**Slew Rate:** 0.25A/uS
**Standard:** Load slew from 10% to 100% in 7.2uS, output voltage over 4V.

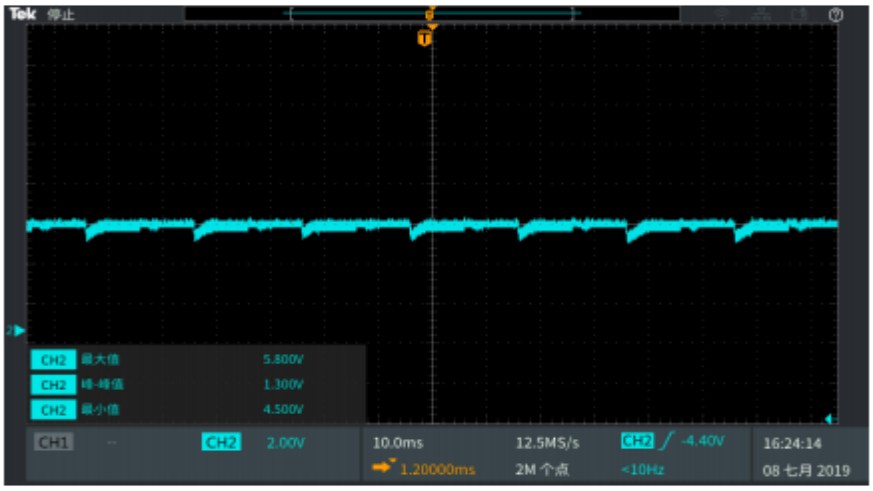


115VAC/60Hz: Vmin: 4.5V

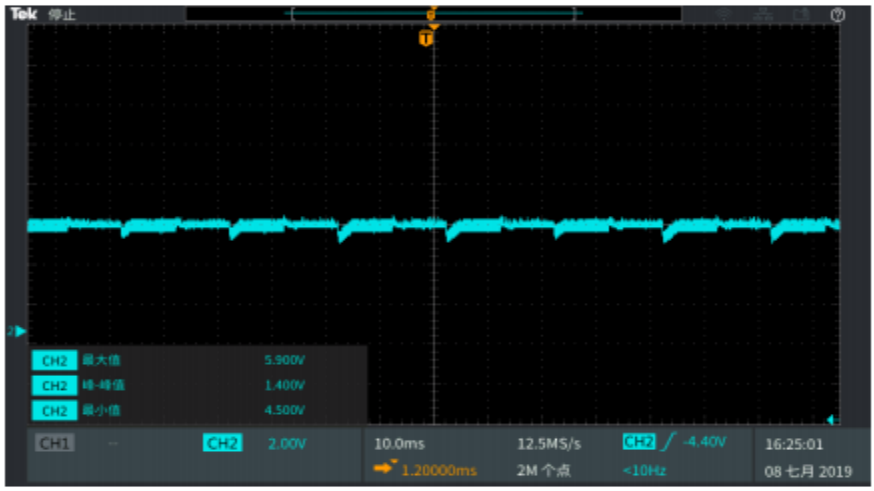


230VAC/50Hz: Vmin: 4.5V

**EMC Testing**

Surge Test

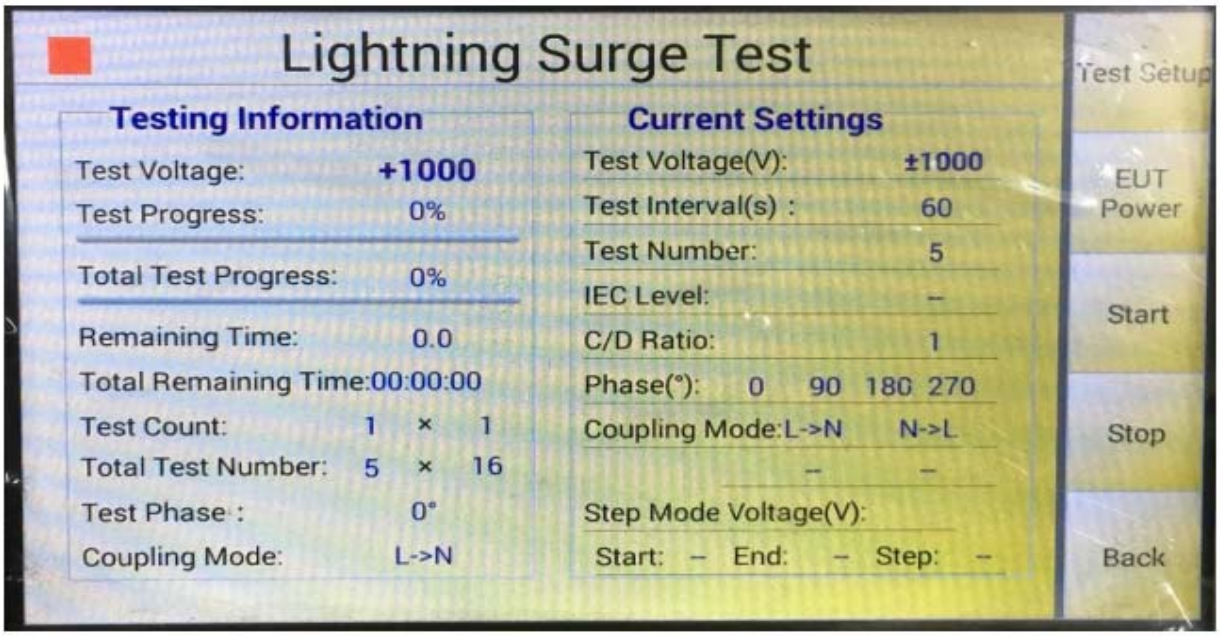


EFT Test

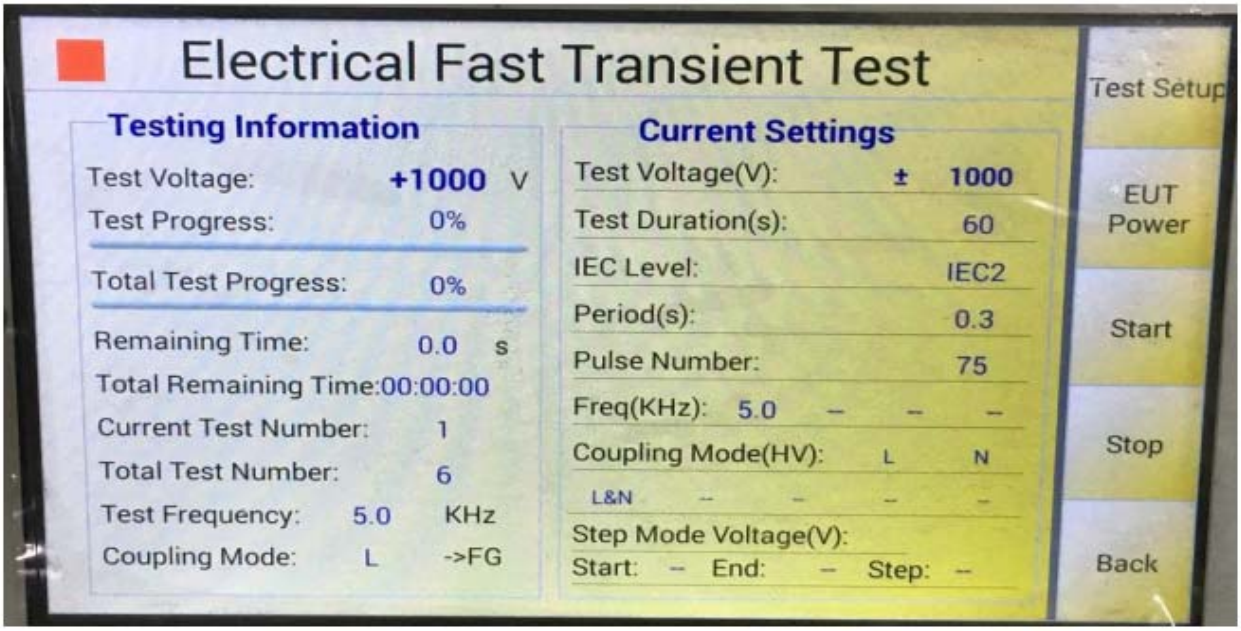

## Package Details

SOP-8 Surface Mount Plastic Package

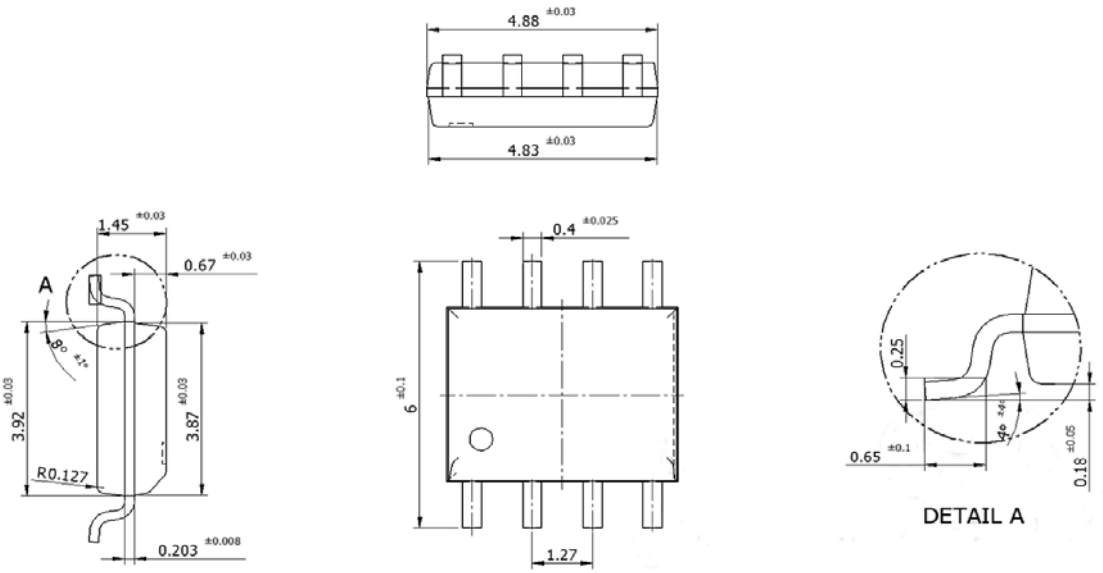


All dimensions are in mm

# Recommended Product Storage Environment for Discrete Semiconductor Devices

This storage environment assumes that the Diodes and transistors are packed properly inside the original packing supplied by CDIL.

- Temperature 5 °C to 30 °C
- Humidity between 40 to 70 %RH
- Air should be clean.
- Avoid harmful gas or dust.
- Avoid outdoor exposure or storage in areas subject to rain or water spraying .
- Avoid storage in areas subject to corrosive gas or dust. Product shall not be stored in areas exposed to direct sunlight.
- Avoid rapid change of temperature.
- Avoid condensation.
- Mechanical stress such as vibration and impact shall be avoided.
- The product shall not be placed directly on the floor.
- The product shall be stored on a plane area. They should not be turned upside down. They should not be placed against the wall.

## Shelf Life of CDIL Products

The shelf life of products is the period from product manufacture to shipment to customers. The product can be unconditionally shipped within this period. The period is defined as 2 years.
If products are stored longer than the shelf life of 2 years the products shall be subjected to quality check as per CDIL quality procedure.
The products are further warranted for another one year after the date of shipment subject to the above conditions in CDIL original packing.

## Floor Life of CDIL Products and MSL Level

When the products are opened from the original packing, the floor life will start.
For this, the following JEDEC table may be referred:

| JEDEC MSL Level | | |
|---|---|---|
| **Level** | **Time** | **Condition** |
| 1 | Unlimited | ≤30 °C / 85% RH |
| 2 | 1 Year | ≤30 °C / 60% RH |
| 2a | 4 Weeks | ≤30 °C / 60% RH |
| 3 | 168 Hours | ≤30 °C / 60% RH |
| 4 | 72 Hours | ≤30 °C / 60% RH |
| 5 | 48 Hours | ≤30 °C / 60% RH |
| 5a | 24 Hours | ≤30 °C / 60% RH |
| 6 | Time on Label(TOL) | ≤30 °C / 60% RH |

## Customer Notes

**Component Disposal Instructions**

1. CDIL Semiconductor Devices are RoHS compliant, customers are requested to please dispose as per prevailing Environmental Legislation of their Country.
2. In Europe, please dispose as per EU Directive 2002/96/EC on Waste Electrical and Electronic Equipment (WEEE).

## Disclaimer

The product information and the selection guides facilitate selection of the CDIL's Semiconductor Device(s) best suited for application in your product(s) as per your requirement. It is recommended that you completely review our Data Sheet(s) so as to confirm that the Device(s) meet functionality parameters for your application. The information furnished in the Data Sheet and on the CDIL Web Site/CD are believed to be accurate and reliable. CDIL however, does not assume responsibility for inaccuracies or incomplete information. Furthermore, CDIL does not assume liability whatsoever, arising out of the application or use of any CDIL product; neither does it convey any license under its patent rights nor rights of others. These products are not designed for use in life saving/support appliances or systems. CDIL customers selling these products (either as individual Semiconductor Devices or incorporated in their end products), in any life saving/support appliances or systems or applications do so at their own risk and CDIL will not be responsible for any damages resulting from such sale(s).
CDIL strives for continuous improvement and reserves the right to change the specifications of its products without prior notice.

**Note:** This product is an electrostatic sensitive component, please pay attention to protection! The range of ESD damage can be from slight performance degradation to equipment failure. Precision integrated circuits may be more vulnerable to damage, which may result in component parameters not meeting published specifications.

CDIL is a registered trademark of
**Continental Device India Pvt. Limited**
C-120 Naraina Industrial Area, New Delhi 110 028, India.
Telephone +91-11-2579 6150, 4141 1112 Fax +91-11-2579 5290, 4141 1119
email@cdil.com www.cdil.com
CIN No. U32109DL1964PTC004291