Town of Marana Standard Details

SECTION 100 STREETS

100-1	LOCAL STREET
100-2	LOCAL STREET MOUNTAINOUS TERRAIN
100-3	ALLEY
100-4	NO LONGER USED
100-5	MINOR COLLECTOR
100-6	SMALL RURAL SUBDIVISION STREET
110-1	2-LANE RURAL COLLECTOR
110-2	2-LANE URBAN COLLECTOR -MEDIAN
110-3	2-LANE URBAN COLLECTOR -CONT. LT TURN LANE
120-1	4-LANE COLLECTOR OR ARTERIAL
120-2	6-LANE ARTERIAL
170-1	EYEBROW KNUCKLE
170-2	EYEBROW CUL-DE-SAC
170-3	STANDARD CUL-DE-SAC
170-4	OFFSET CUL-DE-SAC
170-5	LANDSCAPED CUL-DE-SAC
170-6	TEMPORARY CUL-DE-SAC
170-7	TURNAROUNDS
190-1	LOCAL STREET JOGS
190-2	LOCAL STREET INTERSECTIONS
190-3	TYPICAL SIGHT VISIBILITY TRIANGLES
190-4	TYPICAL EASEMENTS

SECTION 500 UTILITIES

500-1	TYPICAL UTILITY EASEMENTS

SECTION 600 MISCELLANEOUS DETAILS

600-1	TYPE 1 CURB RAMPS
600-2	TYPE 2 CURB RAMPS
600-3	TYPE 3 CURB RAMPS
610-1	LANDSCAPING PROTECTION

SECTION 700 TRAFFIC CONTROL

700-1	ROUNDABOUT
720-1	SPACING BETWEEN PAVEMENT ARROW MARKINGS FOR TURN LANES
730-210	FOUNDATION FOR TYPE IV,V CONTROLLER CABINETS
730-400	GENERAL TRAFFIC SIGNAL RESPONSIBILITIES
730-401	GENERAL TRAFFIC SIGNAL NOTES
730-408	POLE LOADING DETAIL TYPE A POLE
730-409	POLE AND MAST ARM LOADING DETAIL TYPE G POLE WITH 20FT MAST ARM
730-410	MAST ARM LOADING DETAIL TYPE K AND R POLE WITH 55FT MAST ARM
730-411	MAST ARM LOADING DETAIL TYPE K AND R POLE WITH 50FT MAST ARM
730-412	MAST ARM LOADING DETAIL TYPE K AND R POLE WITH 45FT MAST ARM
730-413	MAST ARM LOADING DETAIL TYPE J AND Q POLE WITH 40FT MAST ARM
730-414	MAST ARM LOADING DETAIL TYPE J AND Q POLE WITH 35FT MAST ARM
730-415	MAST ARM LOADING DETAIL TYPE J AND Q POLE WITH 30FT MAST ARM
730-416	MAST ARM LOADING DETAIL TYPE J AND Q POLE WITH 25FT MAST ARM
730-417	MAST ARM LOADING DETAIL TYPE E AND F POLE WITH 20FT MAST ARM
730-701	TYPICAL TRAFFIC SIGNAL CONDUIT SCHEMATIC
730-702	TYPICAL TRAFFIC SIGNAL CABLE SCHEMATIC
730-703	TRAFFIC SIGNAL WIRING SCHEMATIC
730-710	6' X 6' LOOP DETECTOR
730-712	PRESENCE LOOP DETECTOR
730-800	STANDARD TRAFFIC SIGNAL PHASING
730-901	TYPE I AND II MOUNTING ASSEMBLIES
730-902	TYPE III AND IV MOUNTING ASSEMBLIES
730-903	TYPE V MOUNTING ASSEMBLY
730-904	TYPE VI MOUNTING ASSEMBLY
730-905	TYPE VII MOUNTING ASSEMBLY
730-906	TYPE VIII MOUNTING ASSEMBLY
730-907	TYPE IX MOUNTING ASSEMBLY
730-908	TYPE X MOUNTING ASSEMBLY
730-1810	UPS AND ELECTRIC SERVICE
730-1910	PRE-EMPTION MOUNTING DETAIL
730-1911	CAMERA AND MOUNT ASSEMBLY
730-1912	RECEPTACLE AND WREATH MOUNT
740-1	WAYFINDING SIGN

APPROVED FOR DISTRIBUTION:
SEPTEMBER 19, 2017

Keith E. Brann, P.E.,
Town Engineer

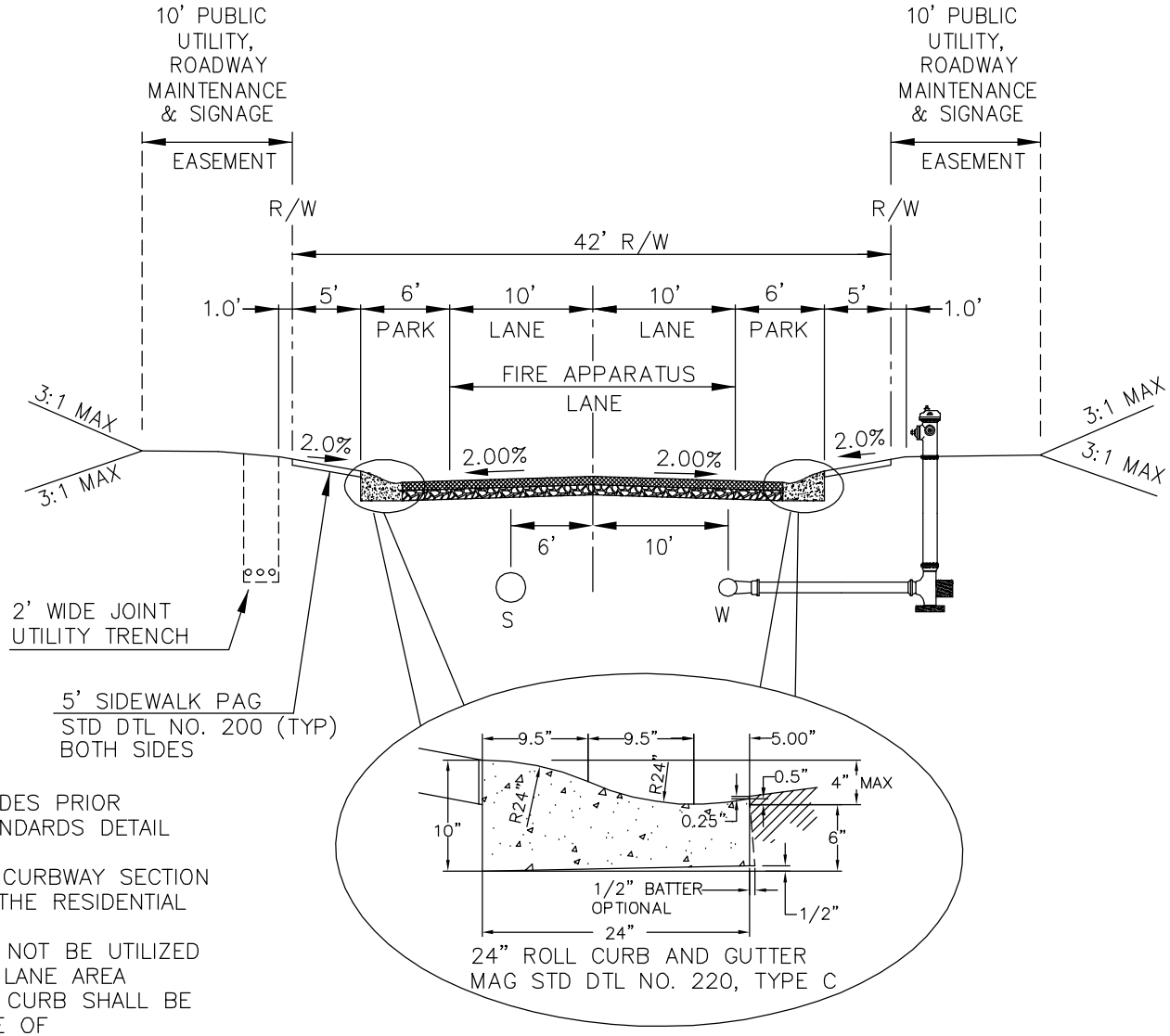

24" ROLL CURB AND GUTTER
MAG STD DTL NO. 220, TYPE C

1. THIS DETAIL SUPERSEDES PRIOR SUBDIVISION STREET STANDARDS DETAIL NUMBER 1.
2. THE USE OF A NON-CURBWAY SECTION MAY NOT COMPLY WITH THE RESIDENTIAL DESIGN GUIDELINES.
3. ROLLED CURB SHALL NOT BE UTILIZED WITHIN FIRE APPARATUS LANE AREA
4. MAG TYPE D ROLLED CURB SHALL BE USED ON THE HIGH SIDE OF SUPERELEVATED SECTIONS

EXPIRES 6/30/2019

NOT TO SCALE

APPROVED FOR DISTRIBUTION:

Keith E. Brann, P.E.,
Town Engineer

Registered Professional Engineer (Civil) CERTIFICATE NO. 40845 KEITH EDWARD BRANN Date Signed 8-17-16 ARIZONA, U.S.A.

TOWN OF MARANA 1947 ARIZONA

STANDARD DETAIL		DETAIL NO:
LOCAL STREET		100-1
DATE: 3/4/2004	REVISED: 8/17/2016	SHEET 1 OF 2

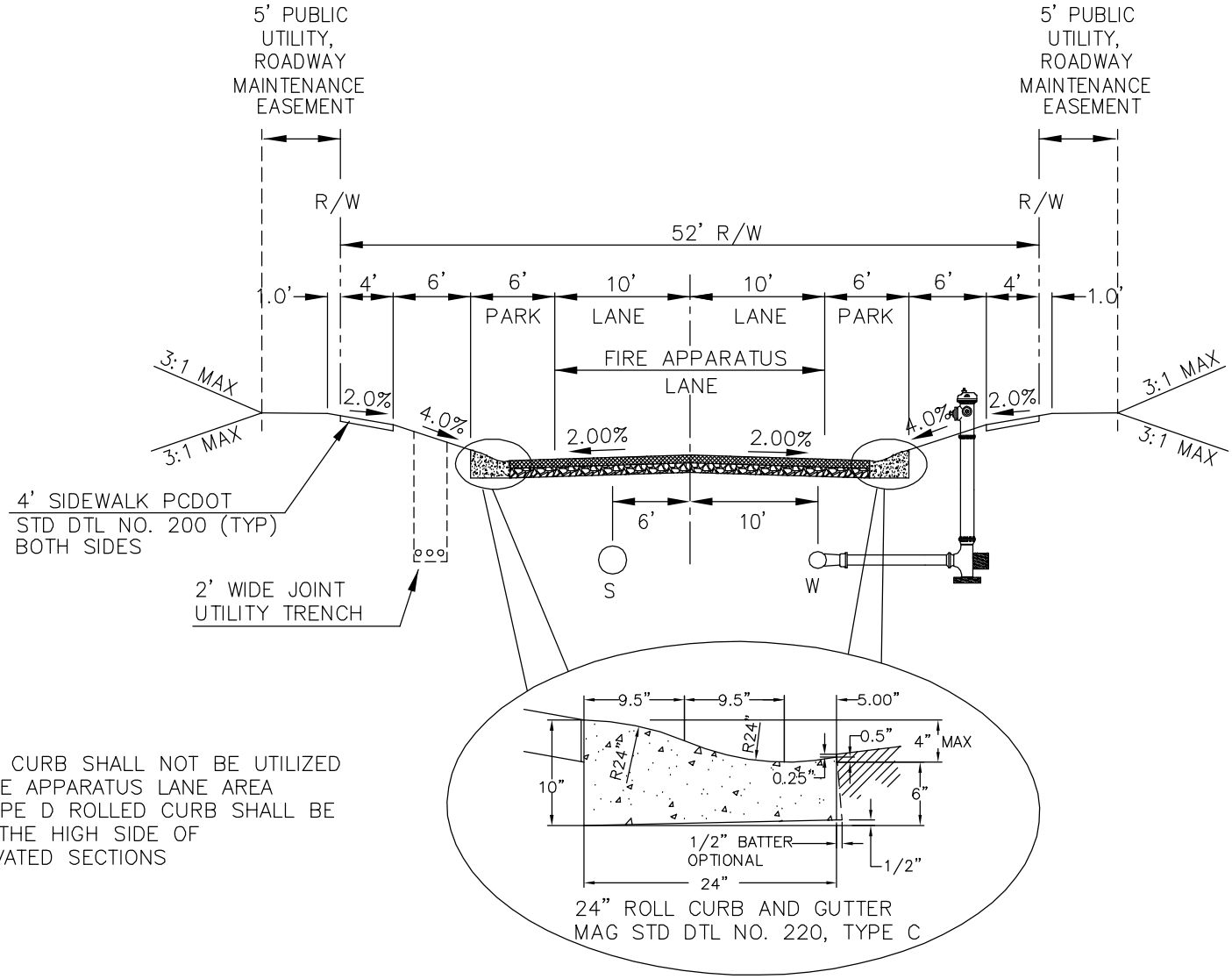

24" ROLL CURB AND GUTTER
MAG STD DTL NO. 220, TYPE C

1. ROLLED CURB SHALL NOT BE UTILIZED WITHIN FIRE APPARATUS LANE AREA
2. MAG TYPE D ROLLED CURB SHALL BE USED ON THE HIGH SIDE OF SUPERELEVATED SECTIONS

NOT TO SCALE

APPROVED FOR DISTRIBUTION:

Keith E. Brann, P.E.,
Town Engineer

EXPIRES 6/30/2019

Registered Professional Engineer (Civil) CERTIFICATE NO. 40845 KEITH EDWARD BRANN Date Signed 8-17-16 ARIZONA, U.S.A.

TOWN OF MARANA 1977 ARIZONA

STANDARD DETAIL		DETAIL NO:
LOCAL STREET WITH CURBWAY		100-1
DATE: 3/4/2005	REVISED: 8/17/2016	SHEET 2 OF 2

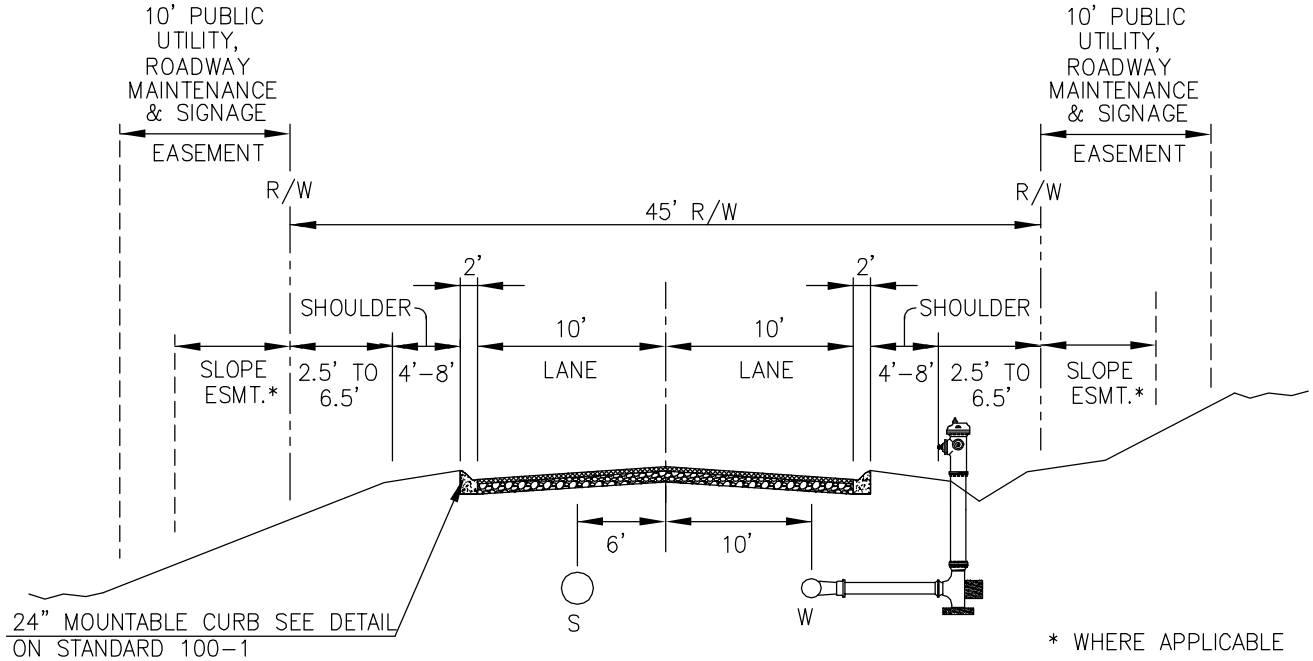

1. THIS DETAIL SUPERSEDES PRIOR SUBDIVISION STREET STANDARDS DETAIL NUMBER 2.
2. DIVIDED ROADWAYS OR ISLANDS ARE NOT PERMITTED. SEE CHAPTER 4.12 OF THE SUBDIVISION STREET STANDARDS MANUAL FOR APPLICATION.
3. 8' SHOULDERS ARE TO BE USED EXCEPT AS NOTED BELOW AND IN CHAPTER 4.12 OF THE SUBDIVISION STREET STANDARDS MANUAL.
4. SHOULDER WIDTH MAY BE VARIED BY THE ENGINEER TO SAVE NATIVE GROWTH. HOWEVER, IT MUST CONFORM TO CHAPTER 6 OF THE SUBDIVISION STREET STANDARDS MANUAL.

EXPIRES 6/30/2019

NOT TO SCALE

APPROVED FOR DISTRIBUTION:

Keith E. Brann, P.E.,
Town Engineer

Registered Professional Engineer (Civil) CERTIFICATE NO. 40845 KEITH EDWARD BRANN Date Signed 6-18-16 ARIZONA, U.S.A.

TOWN OF MARANA 1977 ARIZONA

STANDARD DETAIL		DETAIL NO:
LOCAL STREET MOUNTAINOUS TERRAIN		100-2
DATE: 3/4/2004	REVISED: 8/1/2016	SHEET 1 OF 1

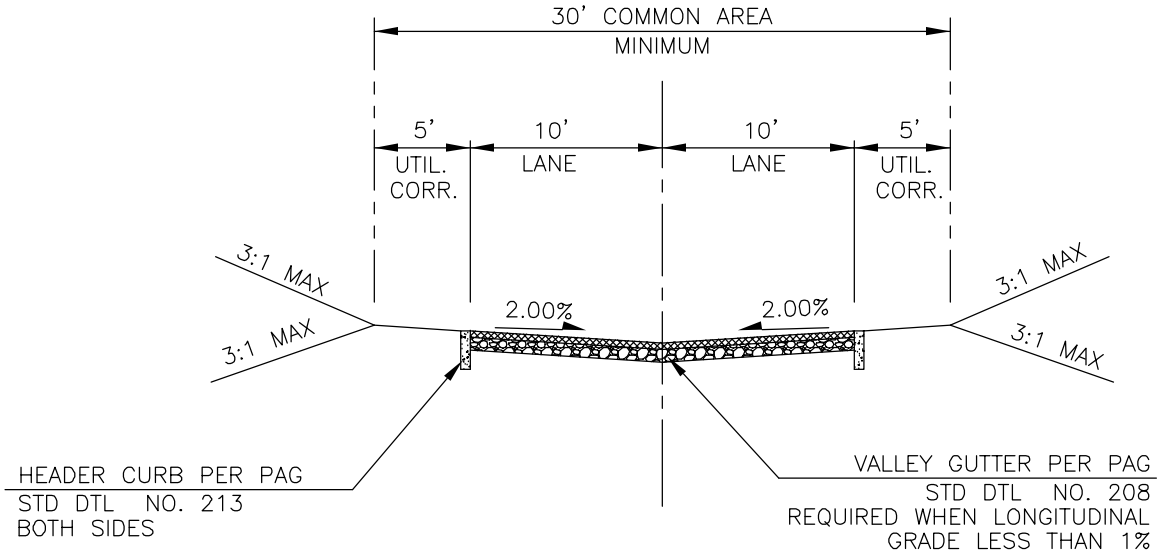

1. FOR COMMNUNITIES REQUESTING "NEW URBANISM"/"NEO TRADITIONAL" DESIGN
2. ALLEYS ARE NOT TO BE MAINTAINED BY TOWN OF MARANA

NOT TO SCALE

APPROVED FOR DISTRIBUTION:

Keith E. Brann, P.E.,
Town Engineer

EXPIRES 6/30/2019

Registered Professional Engineer (Civil)
CERTIFICATE NO. 40845
KEITH EDWARD BRANN
Date Signed 1-18-16
ARIZONA, U.S.A.

TOWN OF MARANA ARIZONA 1977

STANDARD DETAIL		DETAIL NO:
ALLEY		100-3
DATE: 2/16/2007	REVISED: 8/1/2016	SHEET 1 OF 1

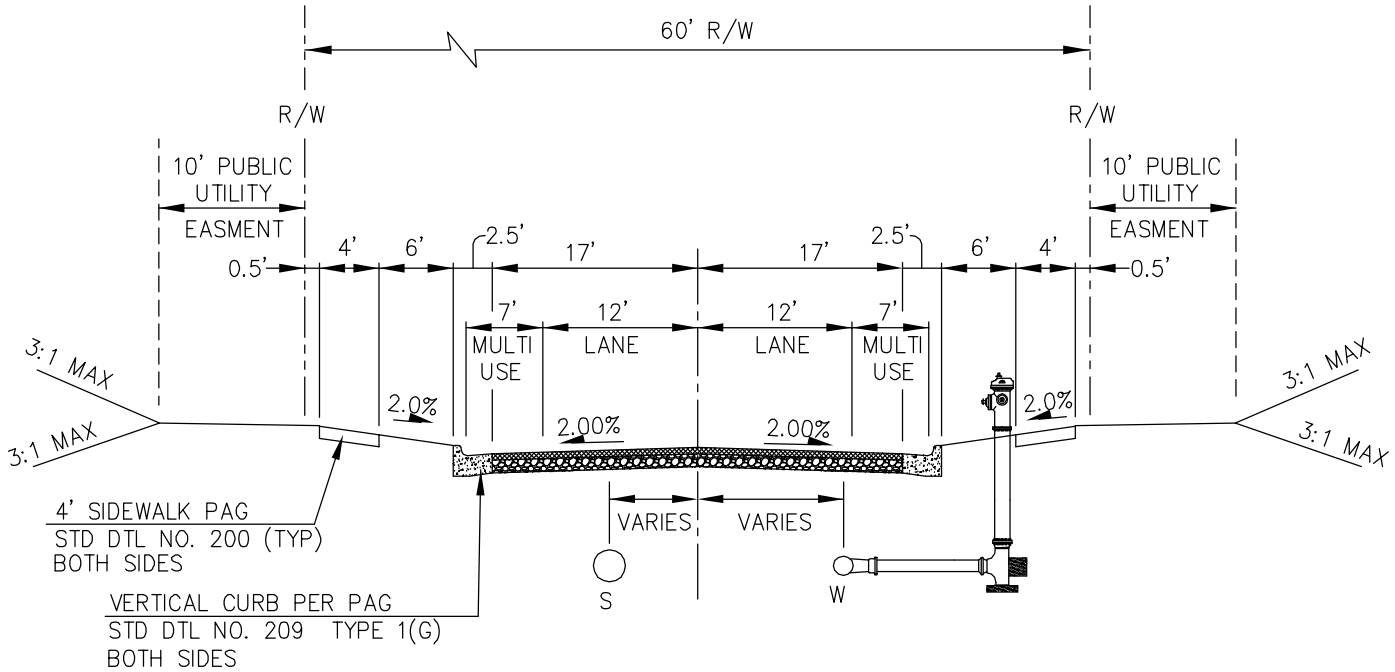

1. THIS DETAIL SUPERSEDES PRIOR SUBDIVISION STREET STANDARDS DETAIL NUMBERS 3 AND 4.
2. NO ON STREET PARKING SUPPORTED.

NOT TO SCALE

APPROVED FOR DISTRIBUTION:

Keith E. Brann, P.E.,
Town Engineer

EXPIRES 6/30/2019

Registered Professional Engineer (Civil) CERTIFICATE NO. 40845 KEITH EDWARD BRANN Date Signed 1-18-16 ARIZONA, U.S.A.

TOWN OF MARANA 1977 ARIZONA

STANDARD DETAIL		DETAIL NO:
MINOR COLLECTOR		100–5
DATE: 3/4/2004	REVISED: 8/1/2016	SHEET 1 OF 1

NORMAL STREET SECTION

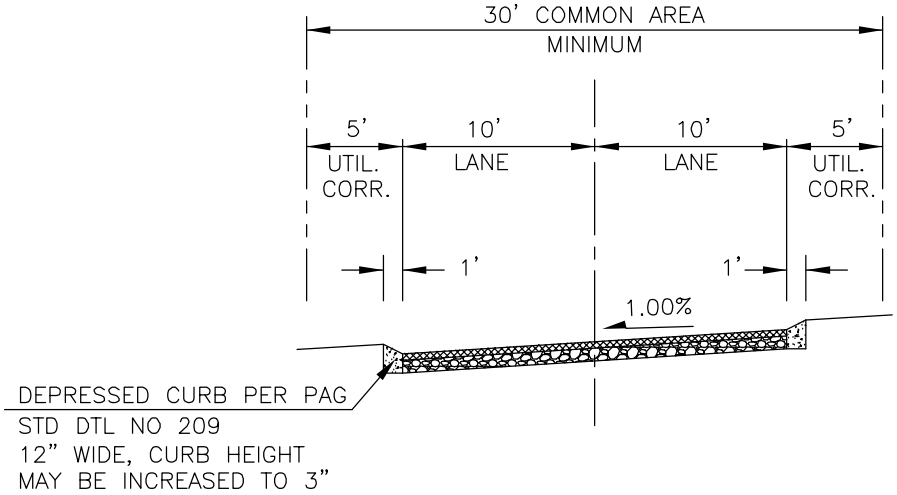

DIP CROSSING/DRAINAGE OUTLET

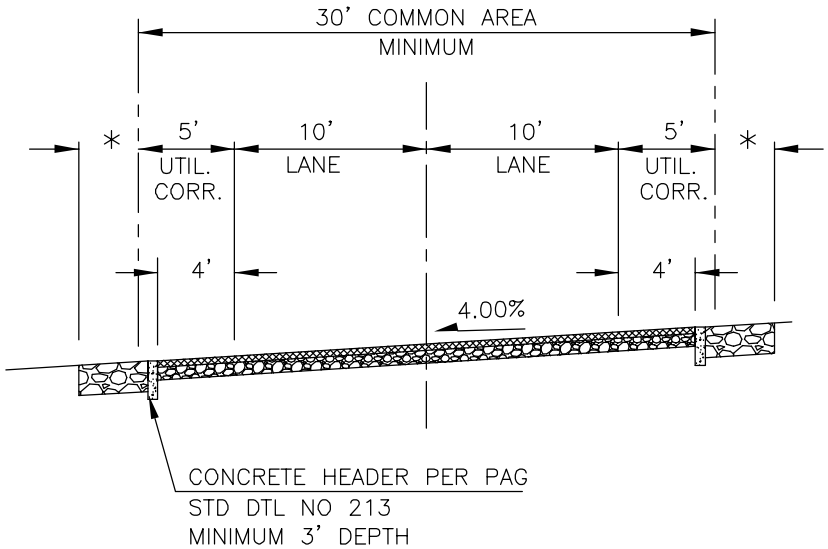

* DRAINAGE EASEMENT AND RIP RAP AS APPROPRIATE

1. FOR SUBDIVISIONS THAT FALL UNDER SMALL SUBDIVISION OF 10 LOTS OR LESS
2. MINIMUM LOT SIZE IN SUBDIVISION MUST BE 36,000 SF
3. STREET CROSS SLOPE TO ALIGN WITH NATURAL FALL OF LAND
4. ALL WEATHER ACCESS TO BE MAINTAINED
5. SECTION DOES NOT SUPPORT ON STREET PARKING

NOT TO SCALE

APPROVED FOR DISTRIBUTION:

Keith E. Brann, P.E.,
Town Engineer

EXPIRES 6/30/2019

Registered Professional Engineer (Civil) CERTIFICATE NO. 40845 KEITH EDWARD BRANN Date Signed 6-18-16 ARIZONA, U.S.A.

TOWN OF MARANA 1977 ARIZONA

STANDARD DETAIL		DETAIL NO:
SMALL RURAL SUBDIVISION STREET		100-6
DATE: 2/16/2007	REVISED: 8/1/2016	SHEET 1 OF 1

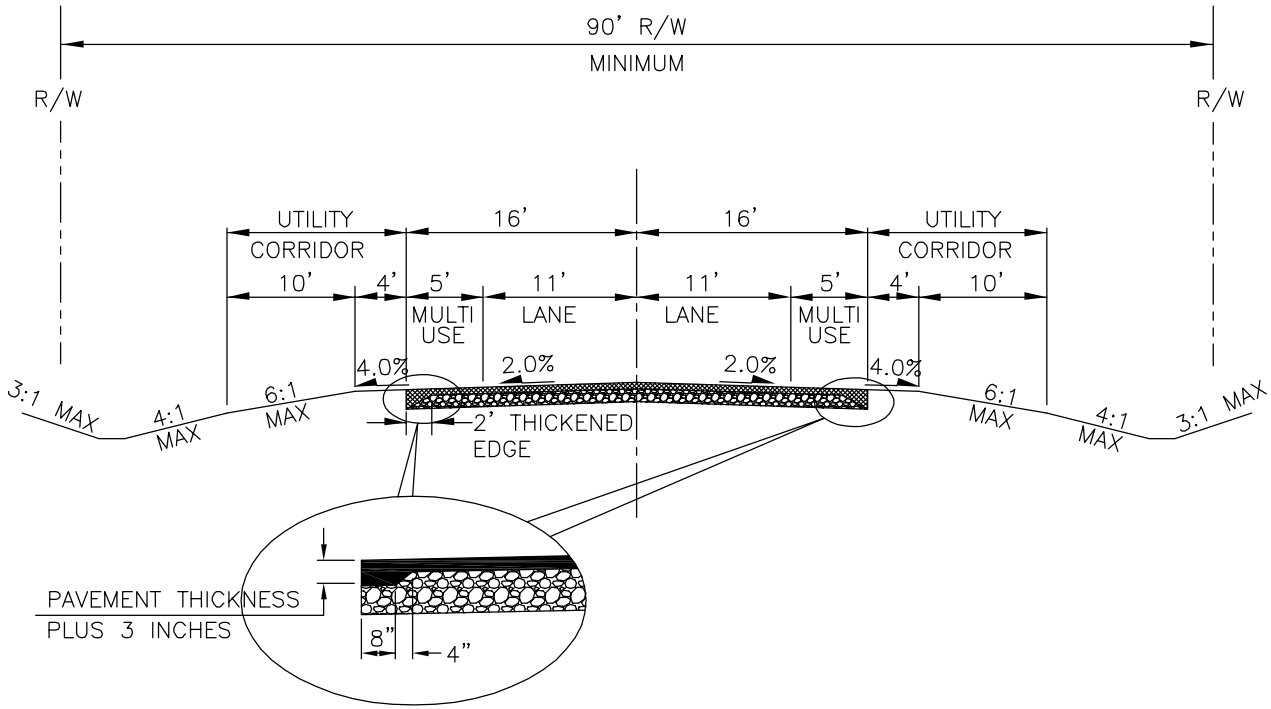

1. RIGHT OF WAY WIDTHS FROM THE MAJOR ROUTES RIGHT OF WAY PLAN SUPERCEDE RIGHT OF WAY WIDTHS SHOWN ON THIS STANDARD

NOT TO SCALE

APPROVED FOR DISTRIBUTION:

Keith E. Brann, P.E.,
Town Engineer

EXPIRES 6/30/2019

Registered Professional Engineer (Civil) CERTIFICATE NO. 40845 KEITH EDWARD BRANN Date Signed 1-18-16 ARIZONA, U.S.A.

TOWN OF MARANA 1977 ARIZONA

STANDARD DETAIL		DETAIL NO:
2-LANE RURAL COLLECTOR		110-1
DATE: 2/16/2007	REVISED: 8/1/2016	SHEET 1 OF 1

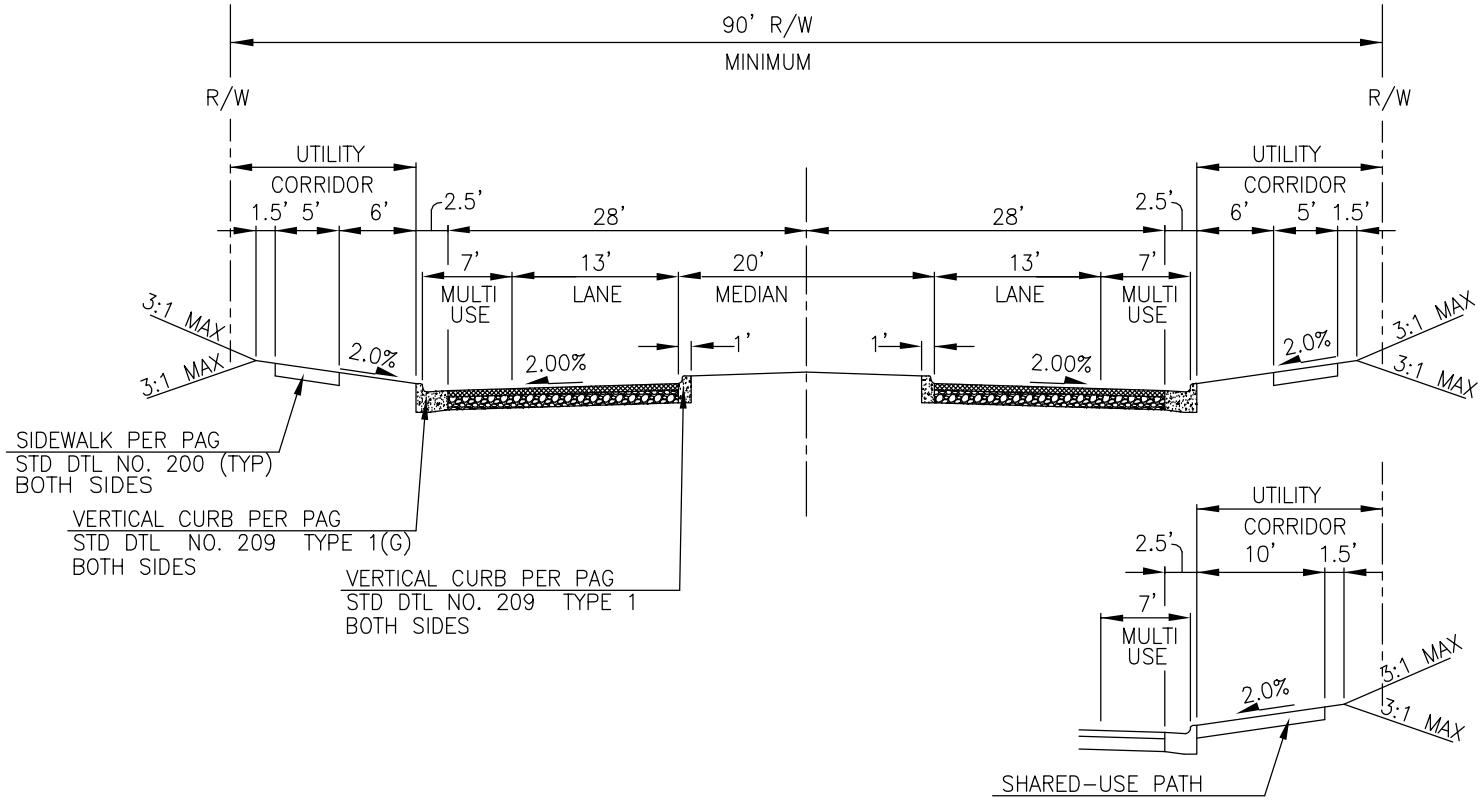

ALTERNATE SHARED-USE PATH

1. RIGHT OF WAY WIDTHS FROM THE MAJOR ROUTES RIGHT OF WAY PLAN SUPERCEDE RIGHT OF WAY WIDTHS SHOWN ON THIS STANDARD

NOT TO SCALE

APPROVED FOR DISTRIBUTION:

Keith E. Brann, P.E.,
Town Engineer

EXPIRES 6/30/2019

Registered Professional Engineer (Civil) CERTIFICATE NO. 40845 KEITH EDWARD BRANN Date Signed 6-18-16 ARIZONA, U.S.A.

TOWN OF MARANA ARIZONA 1977

STANDARD DETAIL		DETAIL NO:
2-LANE URBAN COLLECTOR MEDIAN		110-2
DATE: 2/16/2007	REVISED: 8/1/2016	SHEET 1 OF 1

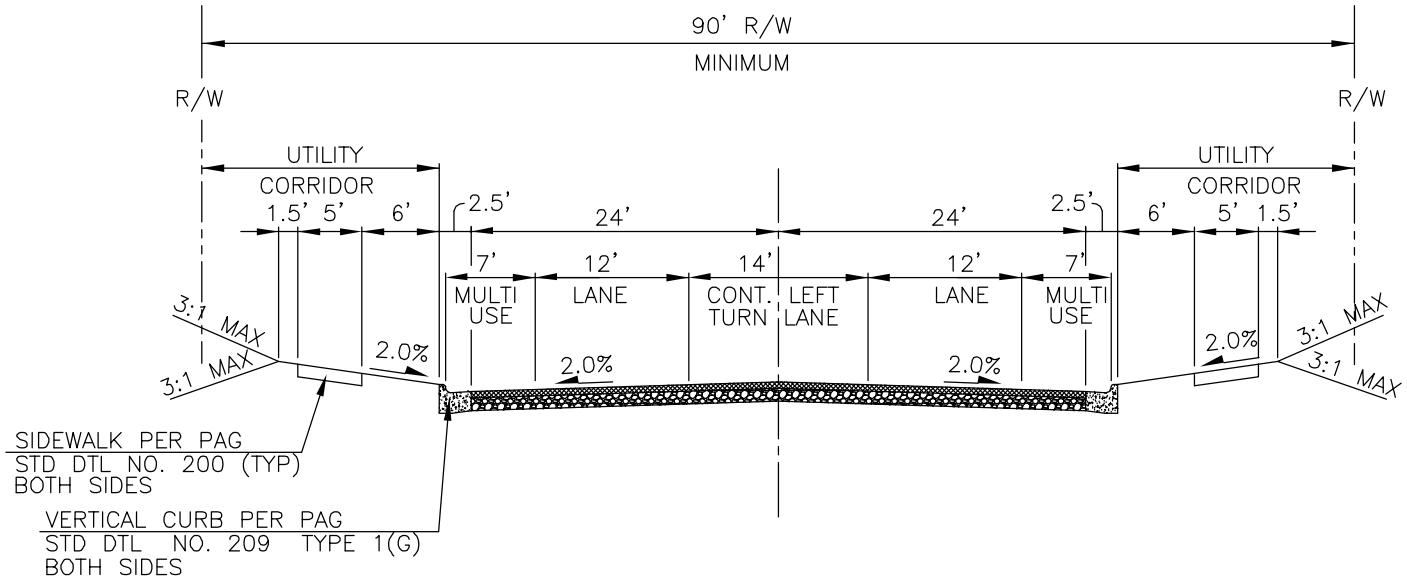

1. RIGHT OF WAY WIDTHS FROM THE MAJOR ROUTES RIGHT OF WAY PLAN SUPERCEDE RIGHT OF WAY WIDTHS SHOWN ON THIS STANDARD

EXPIRES 6/30/2019

NOT TO SCALE

APPROVED FOR DISTRIBUTION:

Keith E. Brann, P.E.,
Town Engineer

Registered Professional Engineer (Civil) CERTIFICATE NO. 40845 KEITH EDWARD BRANN Date Signed 1-18-16 ARIZONA, U.S.A.

TOWN OF MARANA ARIZONA 1977

STANDARD DETAIL		DETAIL NO:
2-LANE URBAN COLLECTOR CONTINUOUS LEFT TURN LANE		110-3
DATE: 2/16/2007	REVISED: 8/1/2016	SHEET 1 OF 1

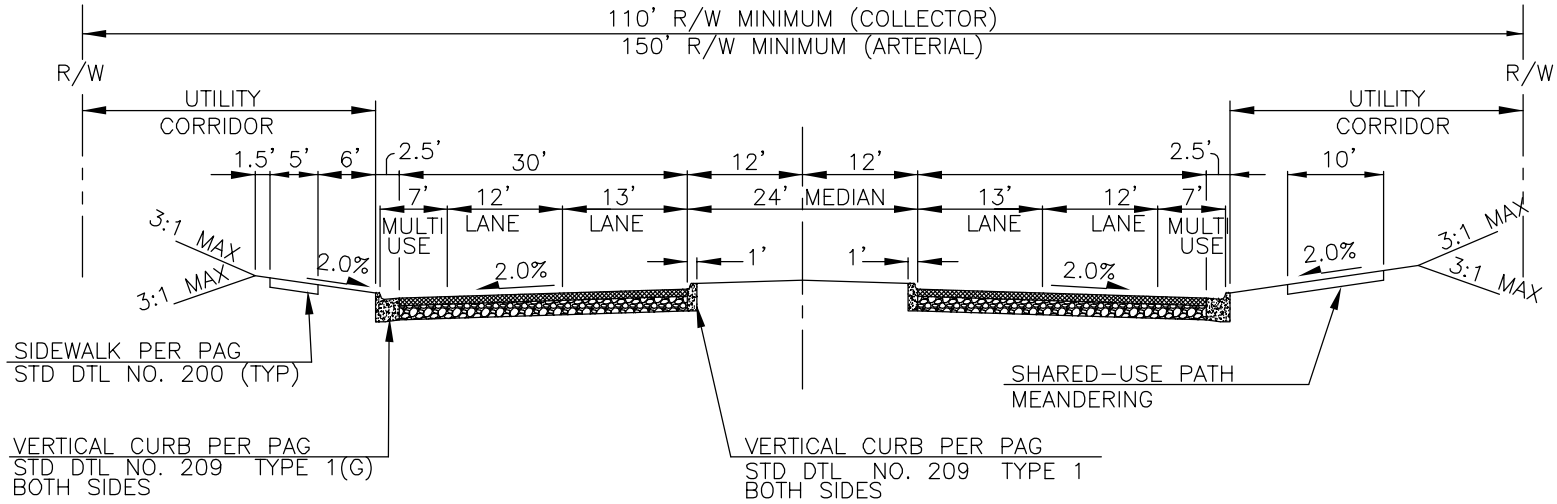

1. RIGHT OF WAY WIDTHS FROM THE MAJOR ROUTES RIGHT OF WAY PLAN SUPERCEDE RIGHT OF WAY WIDTHS SHOWN ON THIS STANDARD
2. ARTERIALS IN URBAN SETTINGS MAY UTILIZE SIDEWALK ON BOTH SIDES OF ROADWAY

NOT TO SCALE

APPROVED FOR DISTRIBUTION:

Keith E. Brann, P.E.,
Town Engineer

EXPIRES 6/30/2019

Registered Professional Engineer (Civil) CERTIFICATE NO. 40845 KEITH EDWARD BRANN Date Signed 8-1-16 ARIZONA, U.S.A.

TOWN OF MARANA ARIZONA 1917

STANDARD DETAIL		DETAIL NO:
4-LANE COLLECTOR OR ARTERIAL		120-1
DATE: 2/16/2007	REVISED: 8/1/2016	SHEET 1 OF 2

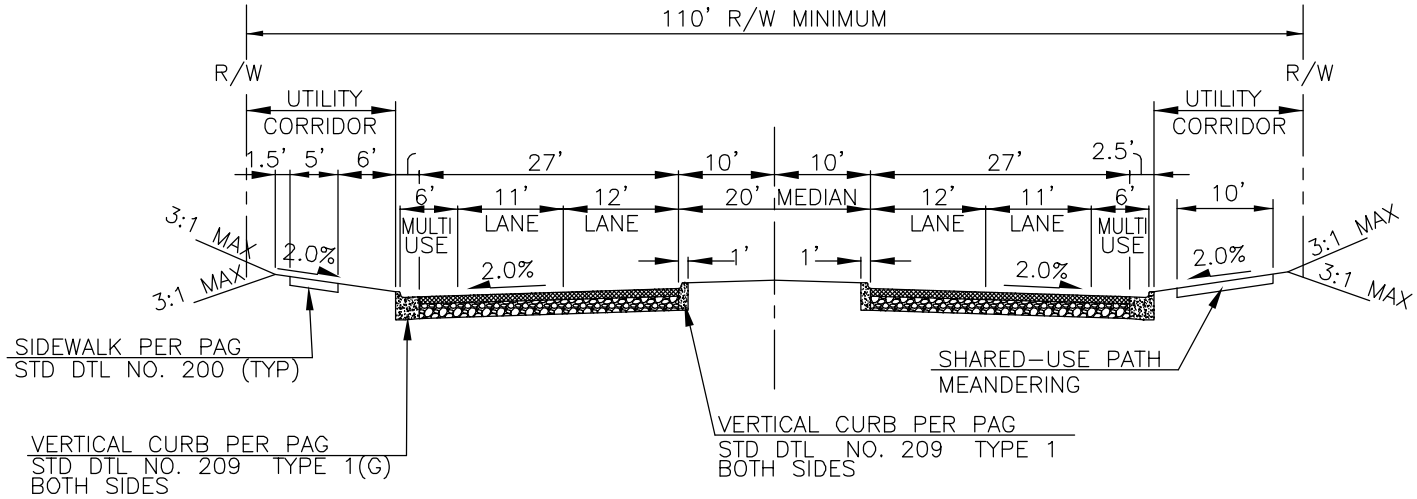

1. ENVIRONMENTALLY SENSITIVE DESIGN FOR USE AT TOWN OF MARANA DIRECTION ONLY
2. RIGHT OF WAY WIDTH OF 110 FEET MAY SUPPLANT RIGHT OF WAY WIDTH FROM MAJOR ROUTES RIGHT OF WAY PLAN (ROADWAY PORTION)

NOT TO SCALE

APPROVED FOR DISTRIBUTION:

Keith E. Brann, P.E.,
Town Engineer

EXPIRES 6/30/2019

Registered Professional Engineer (Civil) CERTIFICATE NO. 40845 KEITH EDWARD BRANN Date Signed 8-1-16 ARIZONA, U.S.A.

TOWN OF MARANA ARIZONA 1917

STANDARD DETAIL		DETAIL NO:
4-LANE COLLECTOR OR ARTERIAL		120-1
DATE: 2/16/2007	REVISED: 8/1/2016	SHEET 2 OF 2

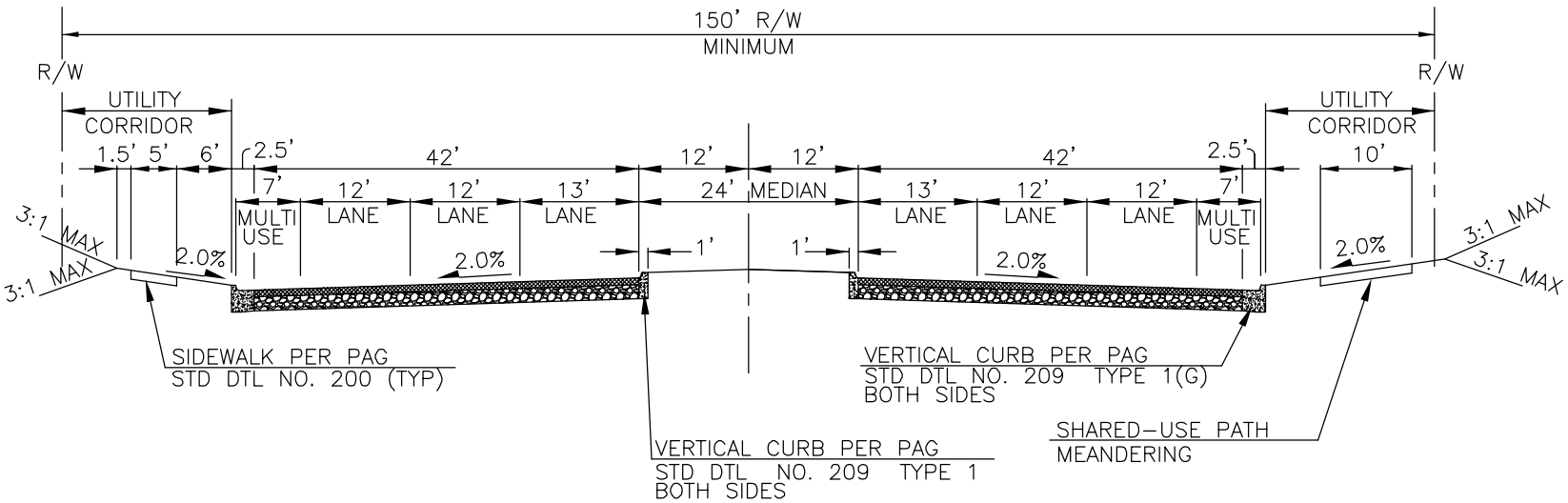

1. RIGHT OF WAY WIDTHS FROM THE MAJOR ROUTES RIGHT OF WAY PLAN SUPERCEDE RIGHT OF WAY WIDTHS SHOWN ON THIS STANDARD
2. ARTERIALS IN URBAN SETTINGS MAY UTILIZE SIDEWALK ON BOTH SIDES OF ROADWAY

NOT TO SCALE

APPROVED FOR DISTRIBUTION:

Keith E. Brann, P.E.,
Town Engineer

EXPIRES 6/30/2019

Registered Professional Engineer (Civil) CERTIFICATE NO. 40845 KEITH EDWARD BRANN Date Signed 6-30-16 ARIZONA, U.S.A.

TOWN OF MARANA ARIZONA 1977

STANDARD DETAIL		DETAIL NO:
6-LANE ARTERIAL		120-2
DATE: 2/16/2007	REVISED: 8/1/2016	SHEET 1 OF 1

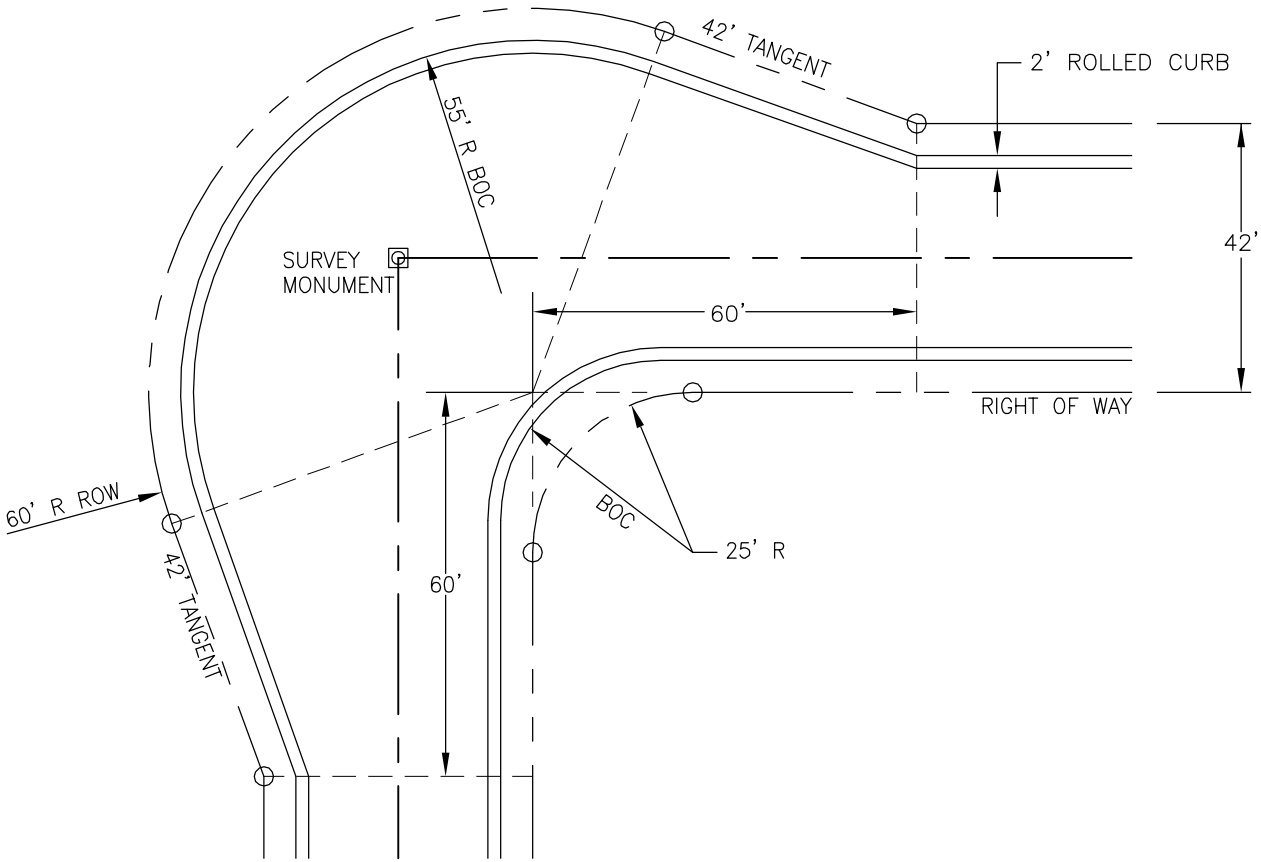

1. THIS DETAIL SUPERSEDES PRIOR SUBDIVISION STREET STANDARDS DETAIL NUMBER 11B
2. DETAIL IS BASED ON STANDARD STREET SECTION 100-1 AND A 90° INTERSECTION, MAY NEED TO BE MODIFIED FOR DIFFERENT SCENARIOS
3. HANDICAP RAMPS ARE NOT TO BE INSTALLED AT EYEBROW KNUCKLE

NOT TO SCALE

APPROVED FOR DISTRIBUTION:

Keith E. Brann, P.E.,
Town Engineer

EXPIRES 6/30/2019

Registered Professional Engineer (Civil) CERTIFICATE NO. 40845 KEITH EDWARD BRANN Date Signed 6-18-16 ARIZONA, U.S.A.

TOWN OF MARANA ARIZONA 1977

STANDARD DETAIL		DETAIL NO:
EYEBROW KNUCKLE		170-1
DATE: 3/4/2004	REVISED: 8/1/2016	SHEET 1 OF 1

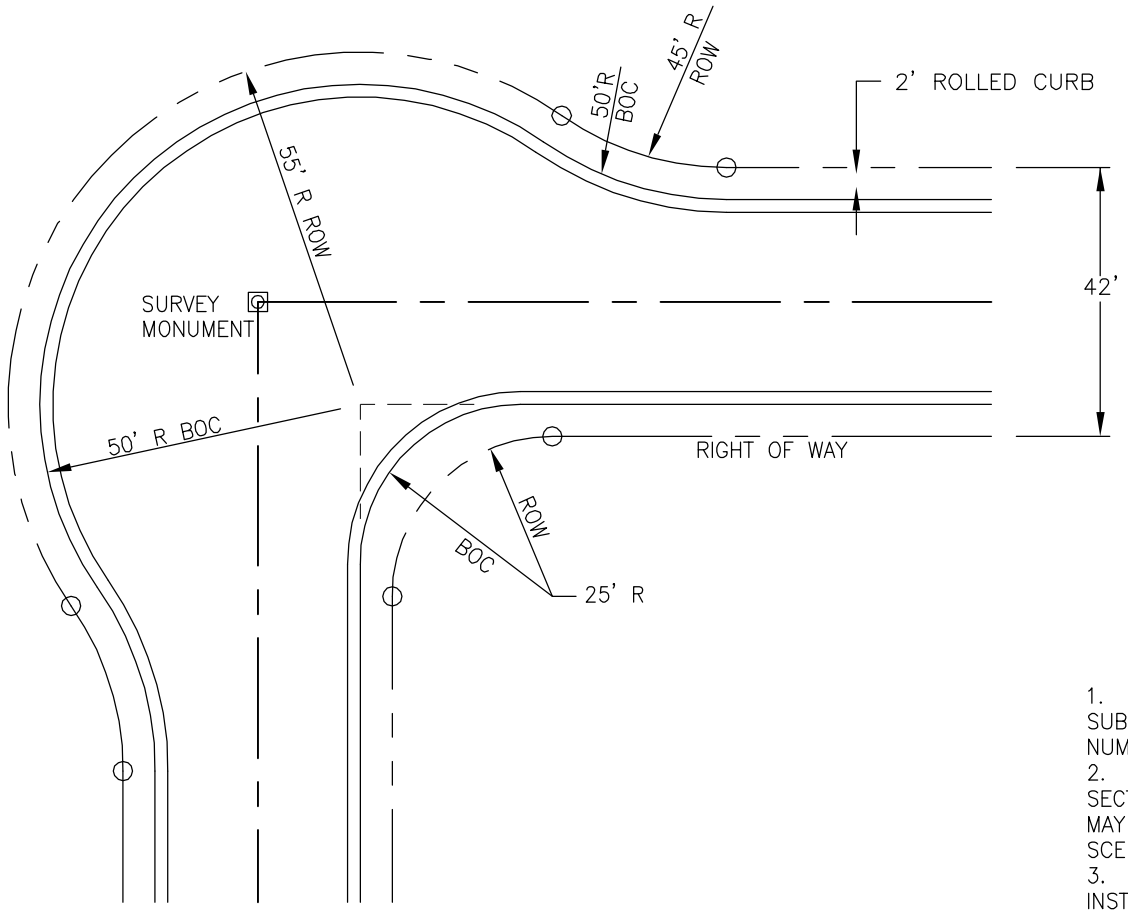

1. THIS DETAIL SUPERSEDES PRIOR SUBDIVISION STREET STANDARDS DETAIL NUMBER 11A
2. DETAIL IS BASED ON STANDARD STREET SECTION 100-1 AND A 90° INTERSECTION, MAY NEED TO BE MODIFIED FOR DIFFERENT SCENARIOS
3. HANDICAP RAMPS ARE NOT TO BE INSTALLED AT EYEBROW CUL-DE-SAC

NOT TO SCALE

APPROVED FOR DISTRIBUTION:

Keith E. Brann, P.E.,
Town Engineer

EXPIRES 6/30/2019

Registered Professional Engineer (Civil) CERTIFICATE NO. 40845 KEITH EDWARD BRANN Date Signed 1-18-16 ARIZONA, U.S.A.

TOWN OF MARANA 1977 ARIZONA

STANDARD DETAIL		DETAIL NO:
EYEBROW CUL-DE-SAC		170-2
DATE: 3/4/2004	REVISED: 8/1/2016	SHEET 1 OF 1

1. THIS DETAIL SUPERSEDES PRIOR SUBDIVISION STREET STANDARDS DETAIL NUMBER 7
2. DETAIL IS BASED ON STANDARD STREET SECTION 100-1, MAY NEED TO BE MODIFIED FOR DIFFERENT STREET SECTIONS

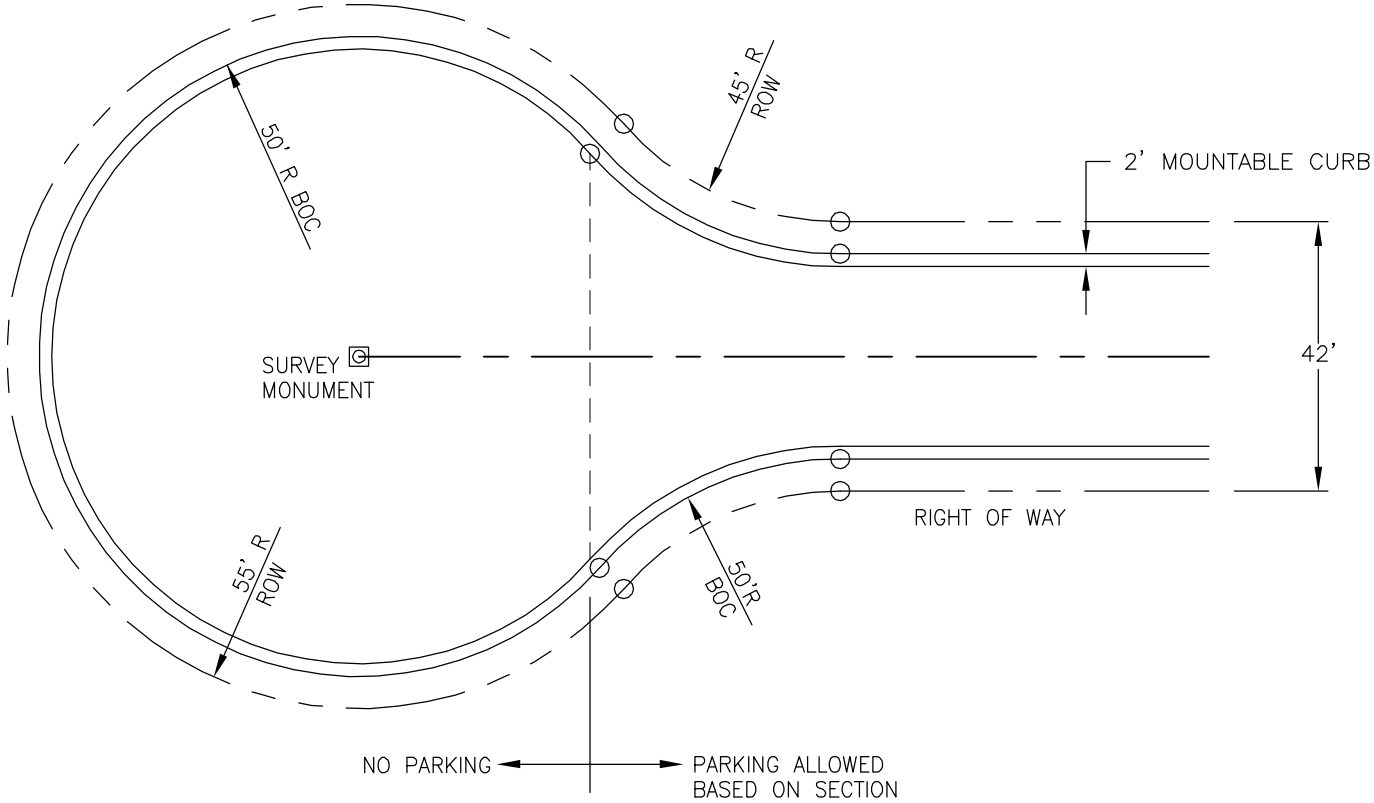

NOT TO SCALE

APPROVED FOR DISTRIBUTION:

Keith E. Brann, P.E.,
Town Engineer

EXPIRES 6/30/2019

Registered Professional Engineer (Civil) CERTIFICATE NO. 40845 KEITH EDWARD BRANN Date Signed 6-1-18 ARIZONA, U.S.A.

TOWN OF MARANA ARIZONA 1977

STANDARD DETAIL		DETAIL NO:
STANDARD CUL-DE-SAC		170-3
DATE: 3/4/2004	REVISED: 8/1/2016	SHEET 1 OF 1

1. THIS DETAIL SUPERSEDES PRIOR SUBDIVISION STREET STANDARDS DETAIL NUMBER 8
2. DETAIL IS BASED ON STANDARD STREET SECTION 100-1, MAY NEED TO BE MODIFIED FOR DIFFERENT STREET SECTIONS

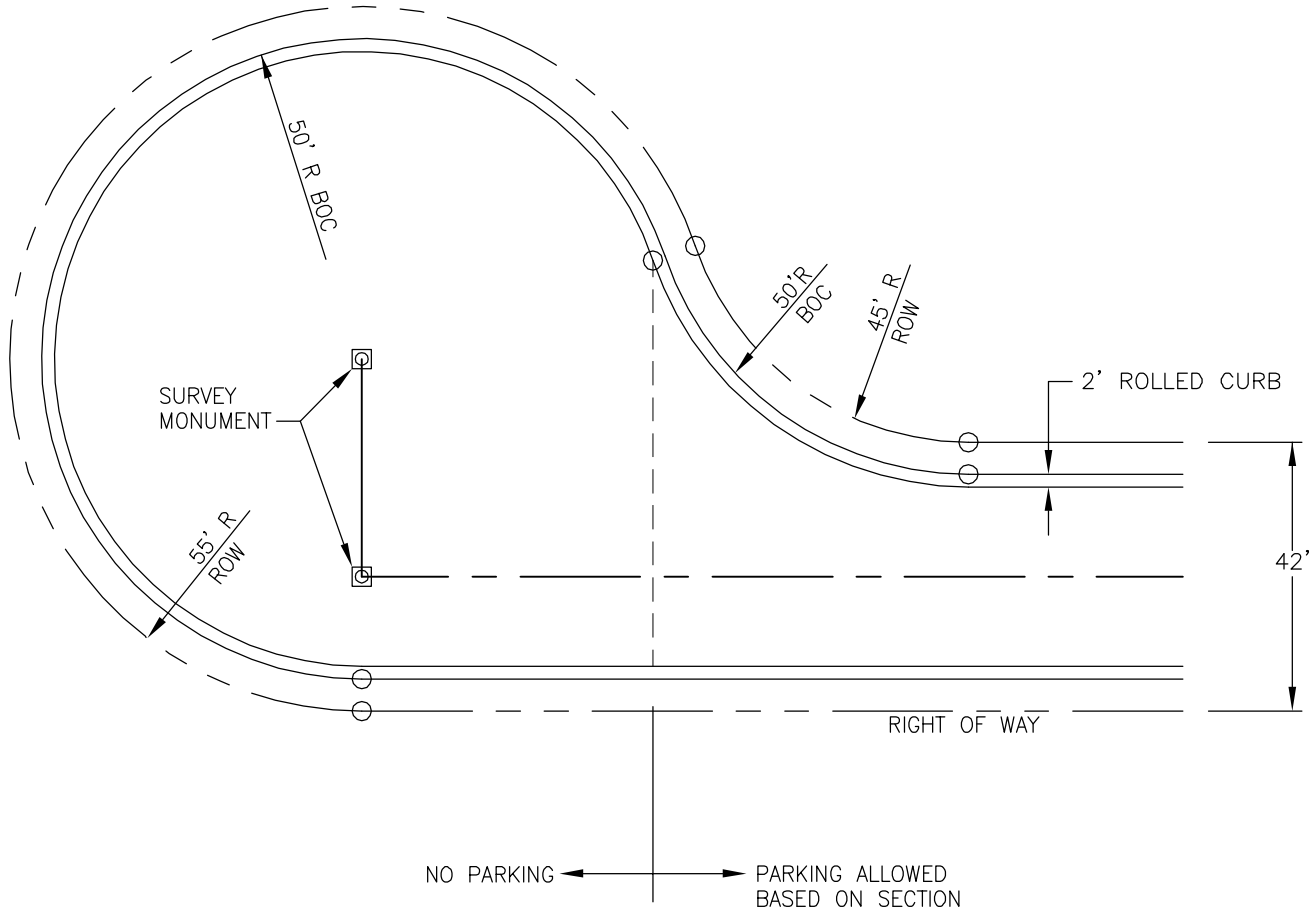

NOT TO SCALE

APPROVED FOR DISTRIBUTION:

Keith E. Brann, P.E.,
Town Engineer

EXPIRES 6/30/2019

Registered Professional Engineer (Civil) CERTIFICATE NO. 40845 KEITH EDWARD BRANN Date Signed 6-30-16 ARIZONA, U.S.A.

TOWN OF MARANA ARIZONA 1977

STANDARD DETAIL		DETAIL NO:
OFFSET CUL-DE-SAC		170-4
DATE: 3/4/2004	REVISED: 8/1/2016	SHEET 1 OF 1

1. THIS DETAIL SUPERSEDES PRIOR SUBDIVISION STREET STANDARDS DETAIL NUMBER 9
2. DETAIL IS BASED ON STANDARD STREET SECTION 100-1, MAY NEED TO BE MODIFIED FOR DIFFERENT STREET SECTIONS
3. FOR REMAINING DIMENSIONS REFER TO DETAIL 170-3
4. LANDSCAPE MATERIALS MUST BE SELECTED AND PLACED SO AS NOT TO INTERFERE WITH DRIVERS' VISIBILITY WITHIN THE MEDIAN BY TWO HORIZONTAL LINES LOCATED 30" AND 72" ABOVE FINISHED GRADE OF THE ROADWAY SURFACE
5. LANDSCAPING/VEGETATION INSTALLED BY THE DEVELOPER/HOMEOWNER'S ASSOCIATION SHALL NOT BE MAINTAINED BY THE TOWN OF MARANA. A LICENSE AGREEMETN MUST BE EXECUTED AND APPROVED BY THE TOWN ENGINEER PRIOR TO CONSTRUCTION.

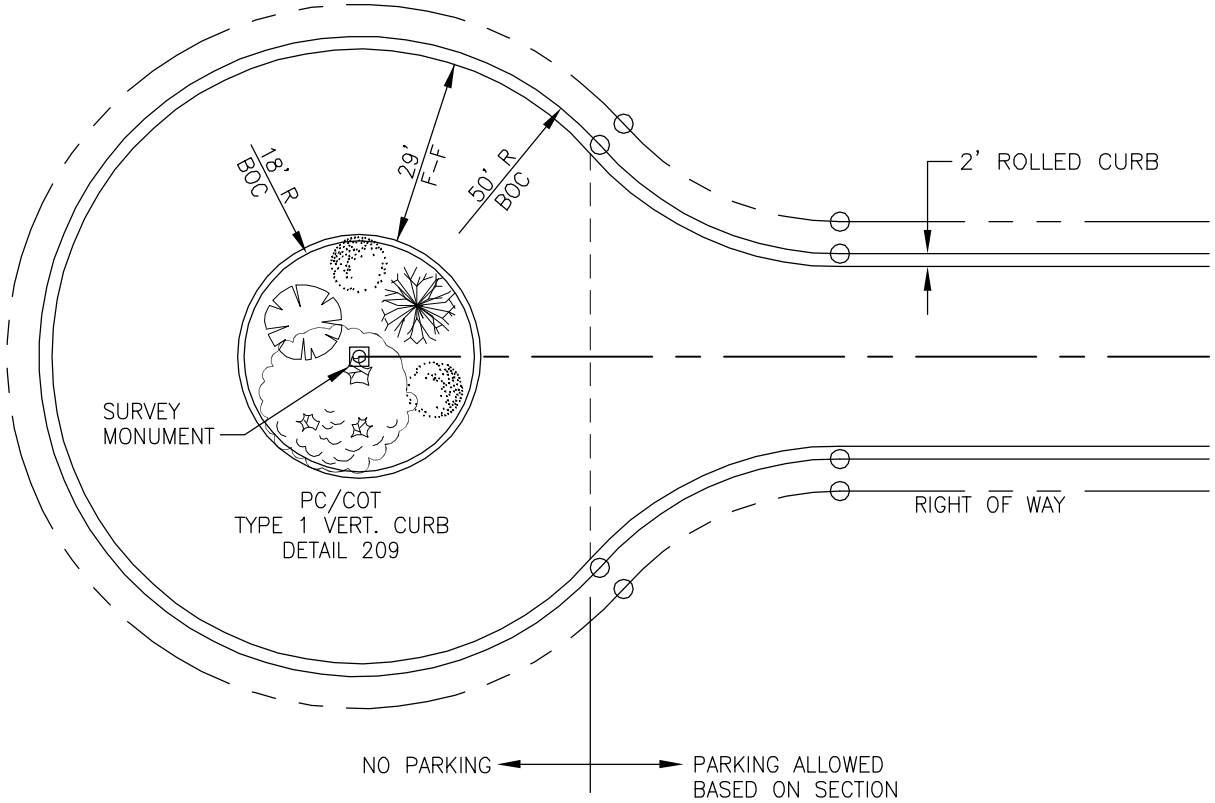

NOT TO SCALE

APPROVED FOR DISTRIBUTION:

Keith E. Brann, P.E.,
Town Engineer

EXPIRES 6/30/2019

Registered Professional Engineer (Civil) CERTIFICATE NO. 40845 KEITH EDWARD BRANN Date Signed 6-30-16 ARIZONA, U.S.A.

TOWN OF MARANA ARIZONA 1977

STANDARD DETAIL		DETAIL NO:
LANDSCAPED CUL-DE-SAC		170-5
DATE: 3/4/2004	REVISED: 8/1/2016	SHEET 1 OF 1

1. THIS DETAIL SUPERSEDES PRIOR SUBDIVISION STREET STANDARDS DETAIL NUMBER 7
2. DETAIL IS BASED ON STANDARD STREET SECTION 100–1, MAY NEED TO BE MODIFIED FOR DIFFERENT STREET SECTIONS
3. ULTIMATE CURB AND STREET SECTION TO BE CONSTRUCTED.
4. TEMPORARY PAVEMENT TO BE OF SAME THICKNESS AS PERMANENT PAVEMENT. TEMPORARY CURB MAY BE MOUNTABLE CURB OR HEADER CURB.
5. DEAD END STREET SIGNAGE AND POST BARRICADES PER STREET STANDARDS TO BE INSTALLED.

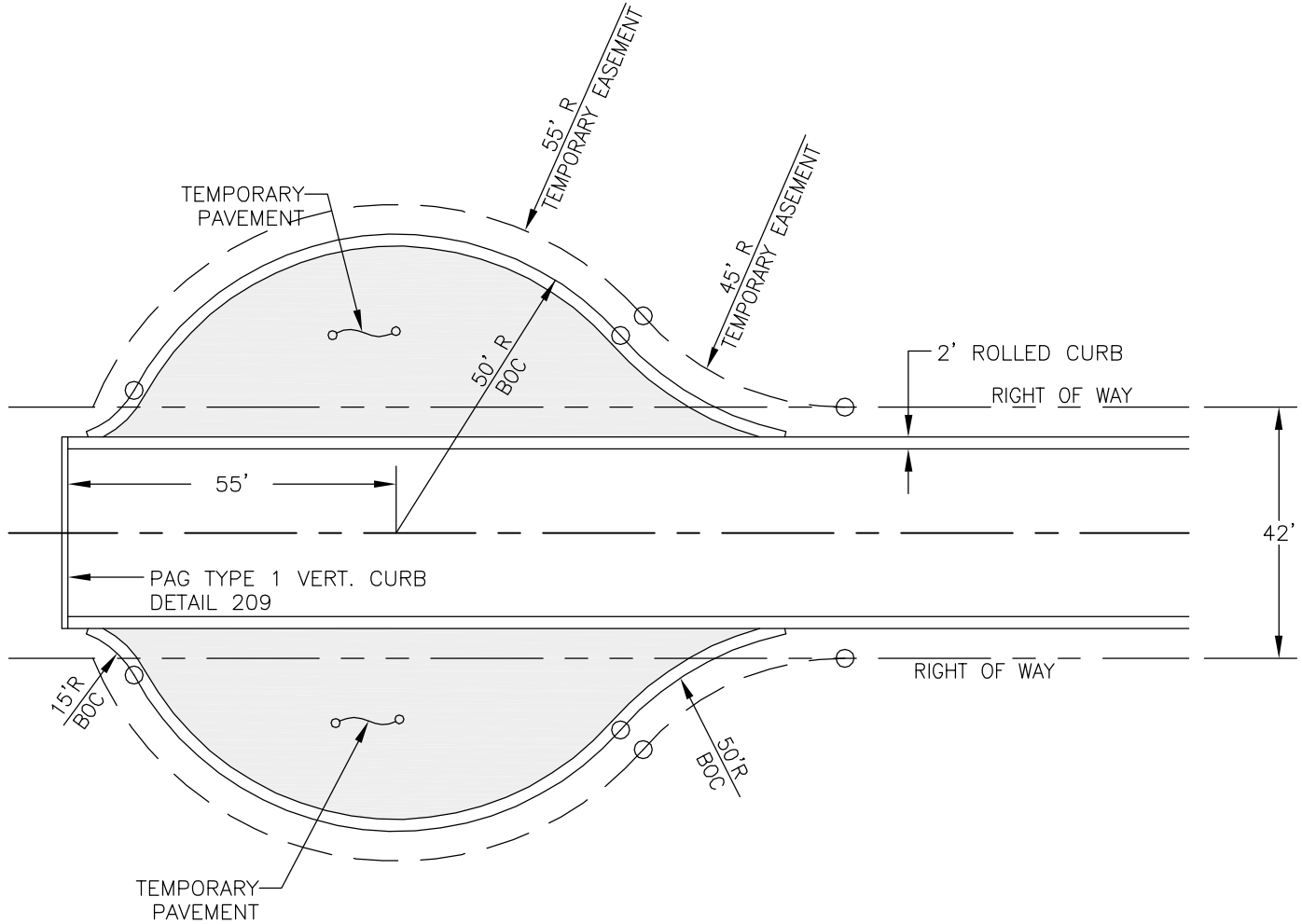

NOT TO SCALE

APPROVED FOR DISTRIBUTION:

Keith E. Brann, P.E.,
Town Engineer

EXPIRES 6/30/2019

Registered Professional Engineer (Civil) CERTIFICATE NO. 40845 KEITH EDWARD BRANN Date Signed 11-18-16 ARIZONA, U.S.A.

TOWN OF MARANA ARIZONA 1977

STANDARD DETAIL		DETAIL NO:
TEMPORARY CUL–DE–SAC		170–6
DATE: 3/4/2004	REVISED: 8/1/2016	SHEET 1 OF 1

1. THIS DETAIL SUPERSEDES PRIOR SUBDIVISION STREET STANDARDS DETAIL NUMBER 12
2. DETAIL IS BASED ON STANDARD STREET SECTION 100-1, MAY NEED TO BE MODIFIED FOR DIFFERENT STREET SECTIONS

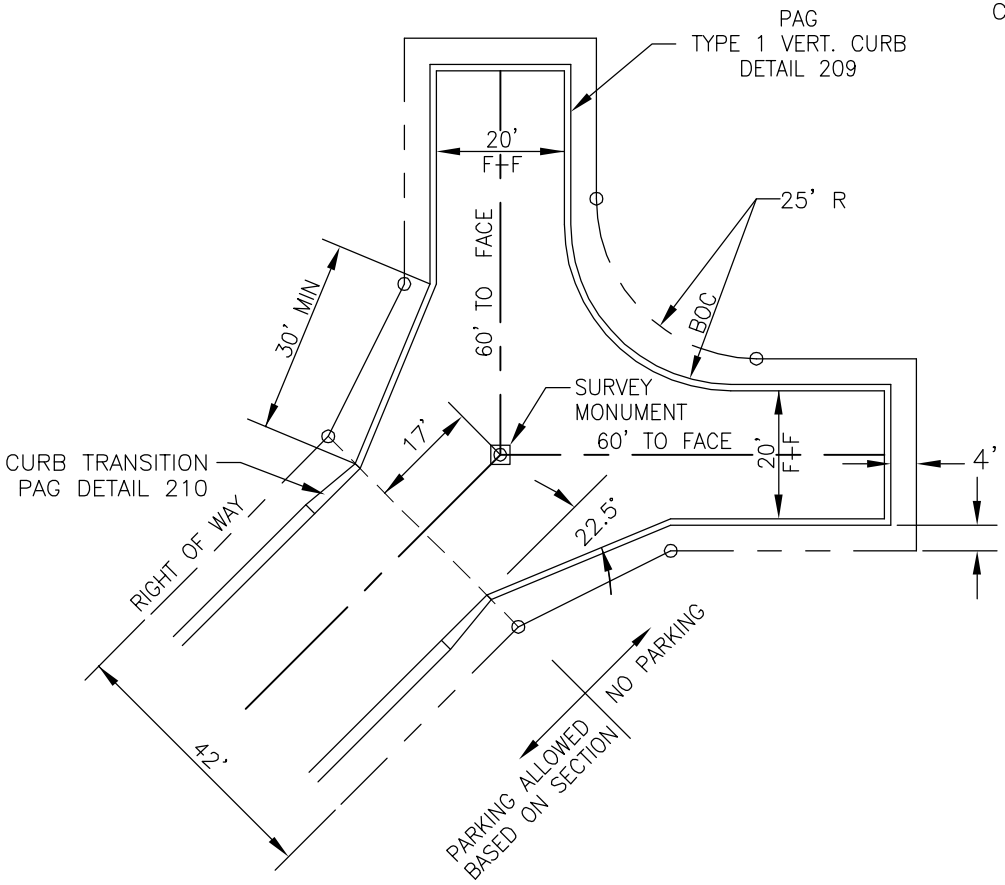

"Y" TURNAROUND

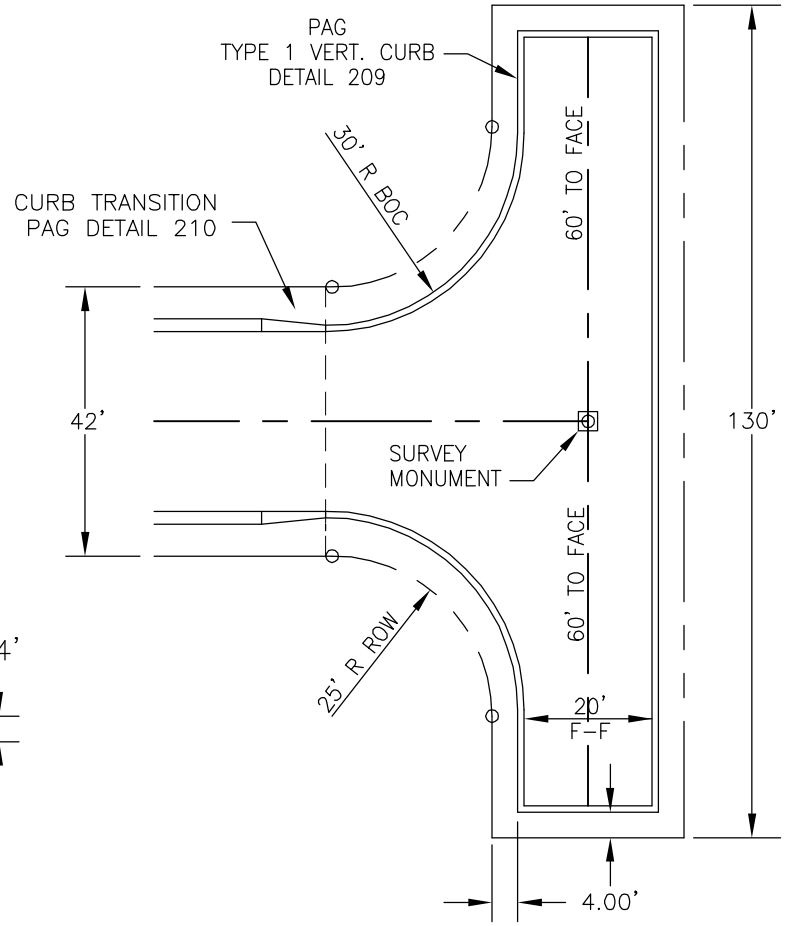

"T" TURNAROUND

NOT TO SCALE

APPROVED FOR DISTRIBUTION:

Keith E. Brann, P.E.,
Town Engineer

EXPIRES 6/30/2019

Registered Professional Engineer (Civil) CERTIFICATE NO. 40845 KEITH EDWARD BRANN Date Signed 8-1-16 ARIZONA, U.S.A.

TOWN OF MARANA ARIZONA 1977

STANDARD DETAIL		DETAIL NO:
TURNAROUNDS		170-7
DATE: 3/4/2004	REVISED: 8/1/2016	SHEET 1 OF 2

1. DETAIL IS BASED ON STANDARD STREET SECTION 100-1, MAY NEED TO BE MODIFIED FOR DIFFERENT STREET SECTIONS

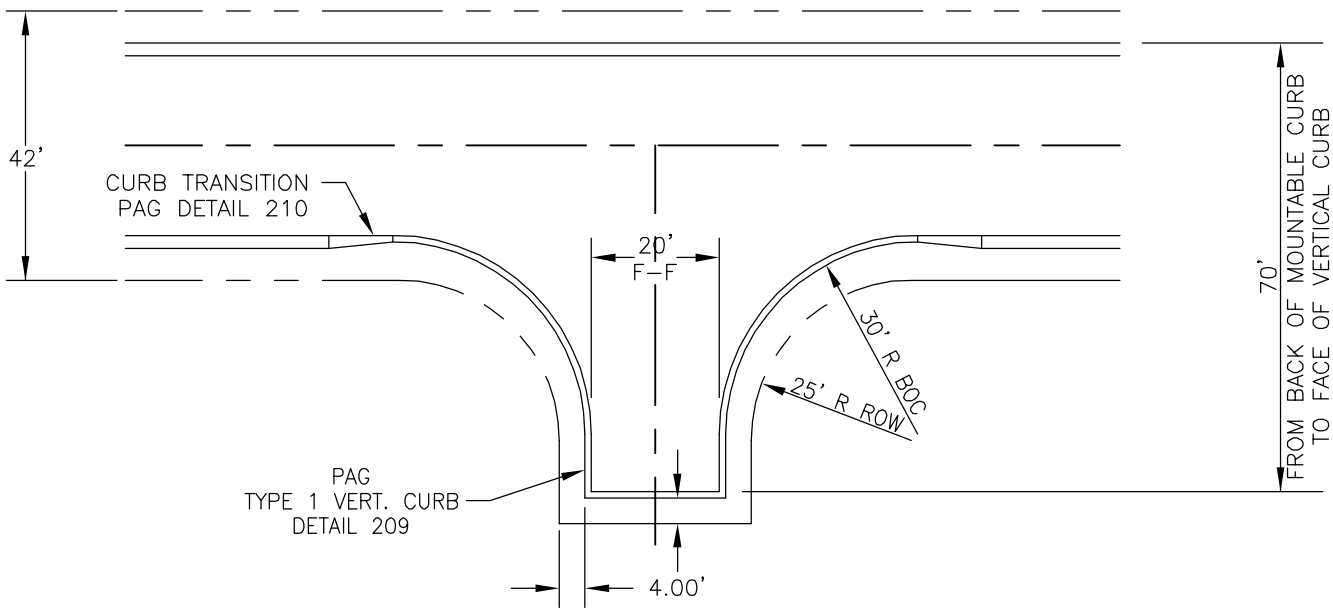

MID-BLOCK TURNAROUND

NOT TO SCALE

APPROVED FOR DISTRIBUTION:

Keith E. Brann, P.E.,
Town Engineer

EXPIRES 6/30/2019

Registered Professional Engineer (Civil) CERTIFICATE NO. 40845 KEITH EDWARD BRANN Date Signed 1-4-18 ARIZONA, U.S.A.

TOWN OF MARANA 1977 ARIZONA

STANDARD DETAIL		DETAIL NO:
TURNAROUNDS		170-7
DATE: 3/4/2004	REVISED: 8/1/2016	SHEET 2 OF 2

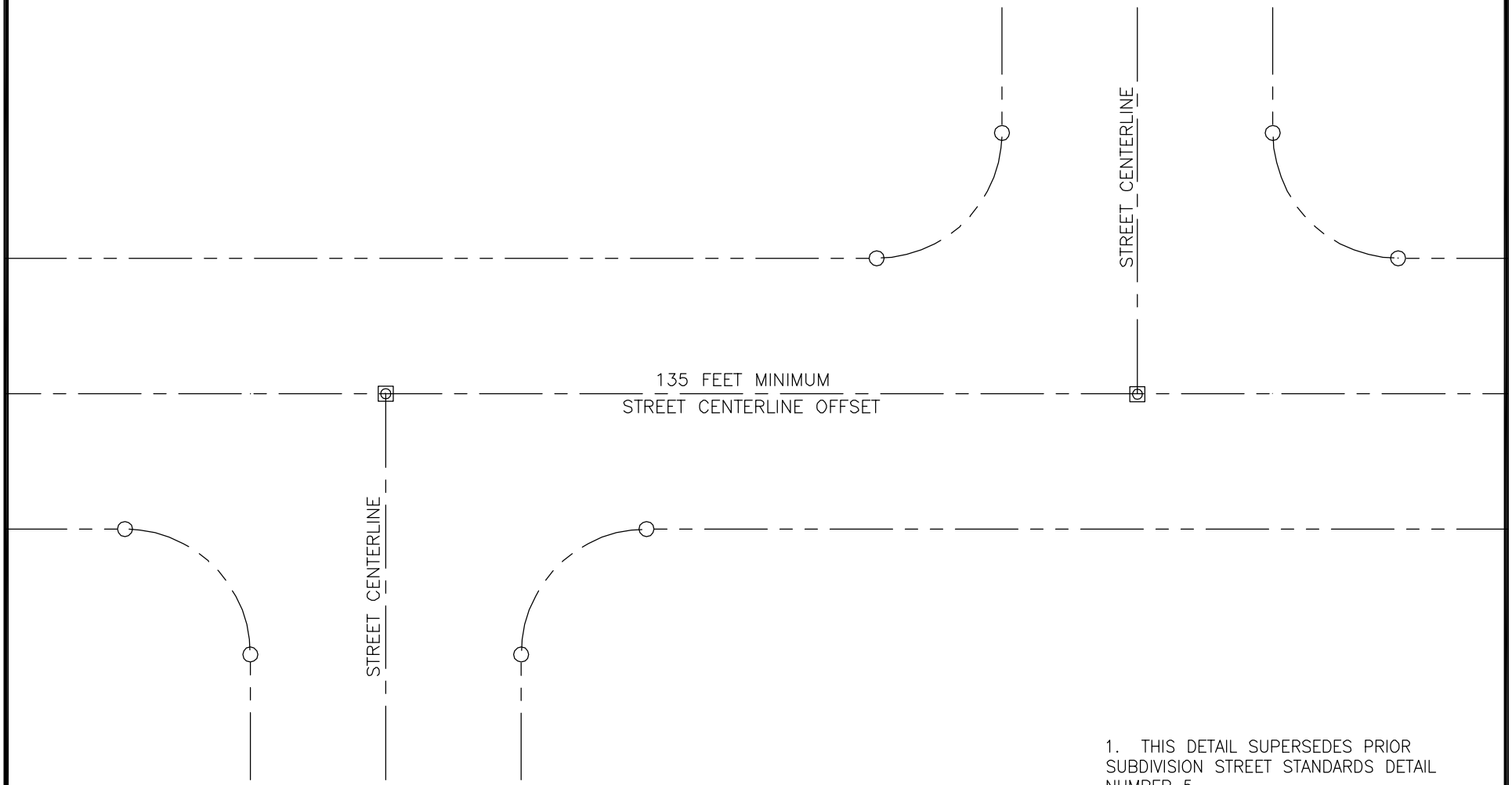

1. THIS DETAIL SUPERSEDES PRIOR SUBDIVISION STREET STANDARDS DETAIL NUMBER 5

NOT TO SCALE

APPROVED FOR DISTRIBUTION:

Keith E. Brann, P.E.,
Town Engineer

EXPIRES 6/30/2019

Registered Professional Engineer (Civil) CERTIFICATE NO. 40845 KEITH EDWARD BRANN Date Signed 6-30-16 ARIZONA, U.S.A.

TOWN OF MARANA ARIZONA 1977

STANDARD DETAIL		DETAIL NO:
LOCAL STREET JOGS		190-1
DATE: 3/4/2004	REVISED: 8/1/2016	SHEET 1 OF 1

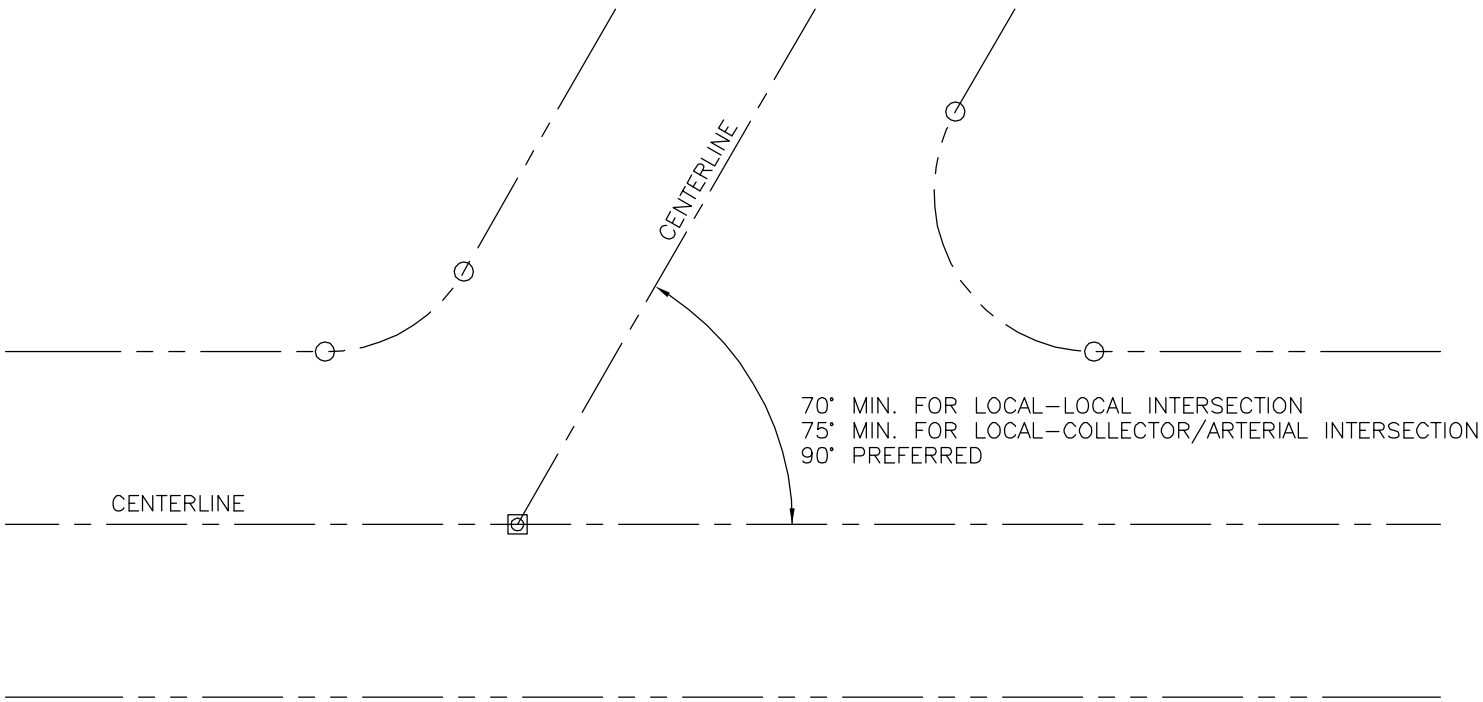

1. THIS DETAIL SUPERSEDES PRIOR SUBDIVISION STREET STANDARDS DETAIL NUMBER 6

NOT TO SCALE

APPROVED FOR DISTRIBUTION:

Keith E. Brann, P.E.,
Town Engineer

EXPIRES 6/30/2019

Registered Professional Engineer (Civil) CERTIFICATE NO. 40845 KEITH EDWARD BRANN Date Signed 6-18-16 ARIZONA, U.S.A.

TOWN OF MARANA ARIZONA 1977

STANDARD DETAIL		DETAIL NO:
LOCAL STREET INTERSECTIONS		190–2
DATE: 3/4/2004	REVISED: 8/1/2016	SHEET 1 OF 1

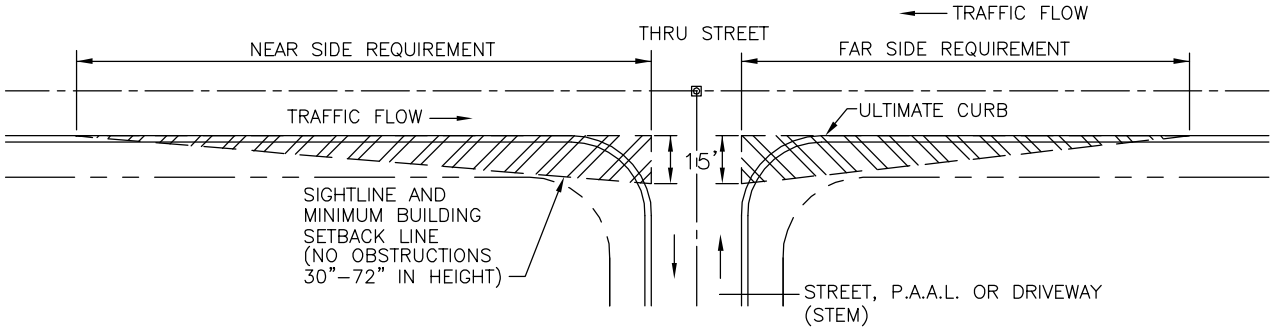

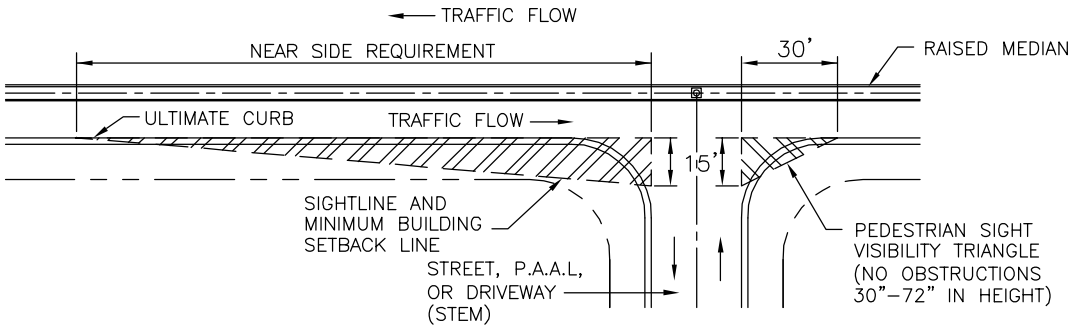

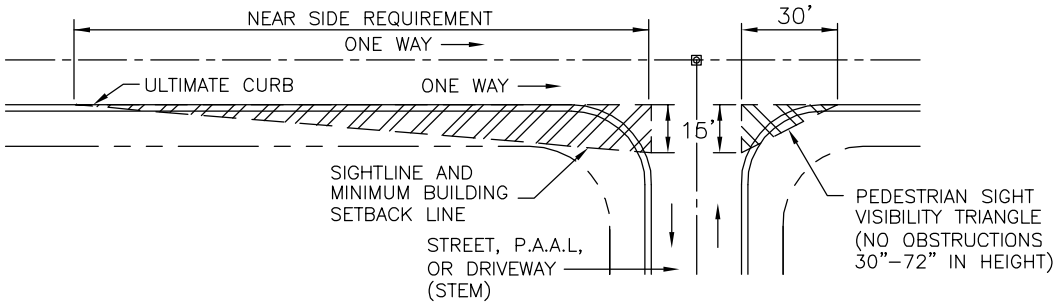

1. THIS DETAIL SUPERSEDES PRIOR SUBDIVISION STREET STANDARDS DETAIL NUMBER 13.

NOT TO SCALE

APPROVED FOR DISTRIBUTION:

Keith E. Brann, P.E.,
Town Engineer

EXPIRES 6/30/2019

Registered Professional Engineer (Civil) CERTIFICATE NO. 40845 KEITH EDWARD BRANN Date Signed ARIZONA, U.S.A.

TOWN OF MARANA ARIZONA 1977

STANDARD DETAIL		DETAIL NO:
TYPICAL SIGHT VISIBILITY TRIANGLES		190–3
DATE: 3/4/2004	REVISED: 8/1/2016	SHEET 1 OF 3

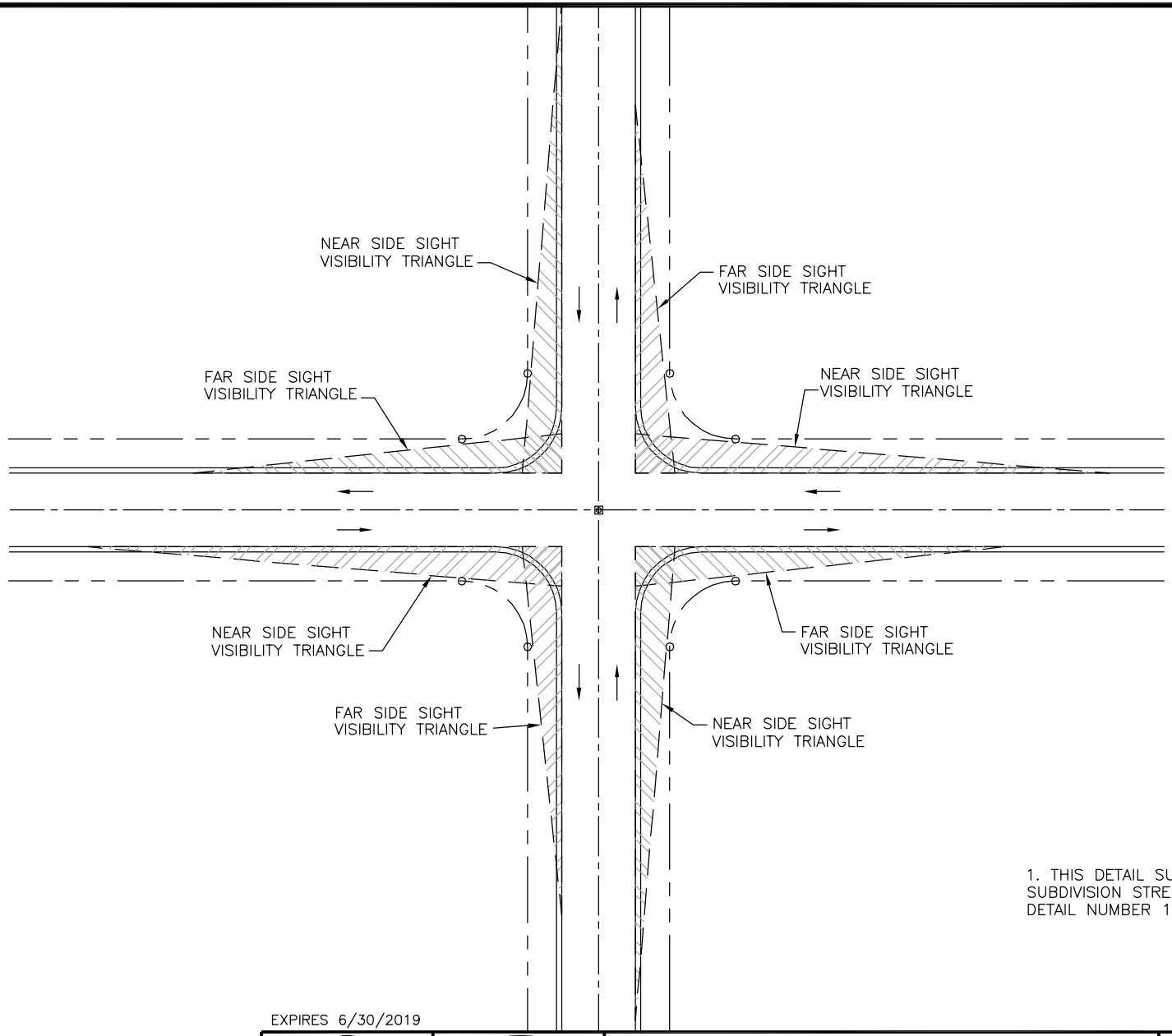

1. THIS DETAIL SUPERSEDES PRIOR SUBDIVISION STREET STANDARDS DETAIL NUMBER 14.

NOT TO SCALE

APPROVED FOR DISTRIBUTION:

Keith E. Brann, P.E.,
Town Engineer

EXPIRES 6/30/2019

Registered Professional Engineer (Civil) CERTIFICATE NO. 40845 KEITH EDWARD BRANN Date Signed ARIZONA, U.S.A.

TOWN OF MARANA 1977 ARIZONA

STANDARD DETAIL		DETAIL NO:
TYPICAL SIGHT VISIBILITY TRIANGLES		190–3
DATE: 3/4/2004	REVISED: 8/1/2016	SHEET 2 OF 3

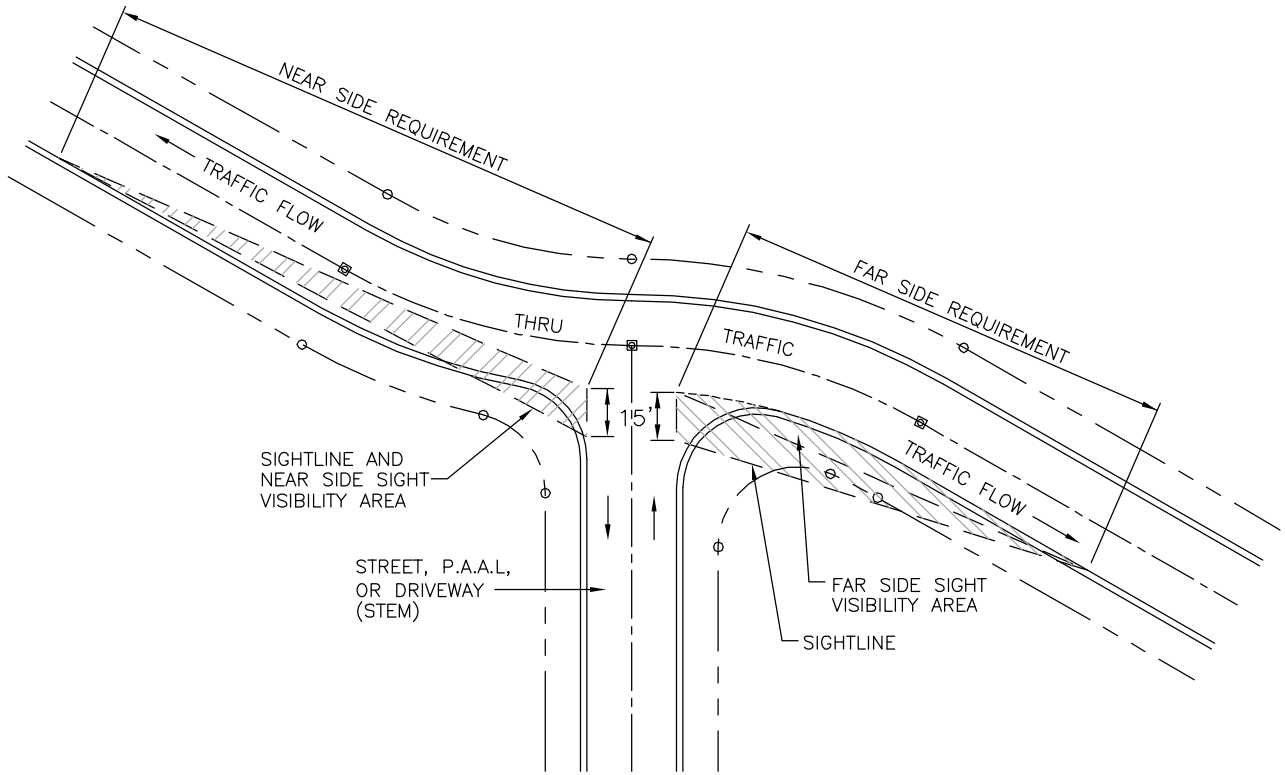

1. THIS DETAIL SUPERSEDES PRIOR SUBDIVISION STREET STANDARDS DETAIL NUMBER 15.

NOT TO SCALE

APPROVED FOR DISTRIBUTION:

Keith E. Brann, P.E.,
Town Engineer

EXPIRES 6/30/2019

Registered Professional Engineer (Civil)
CERTIFICATE NO. 40845
KEITH EDWARD BRANN
Date Signed
ARIZONA, U.S.A.

TOWN OF MARANA ARIZONA 1977

STANDARD DETAIL		DETAIL NO:
TYPICAL SIGHT VISIBILITY TRIANGLES		190–3
DATE: 3/4/2004	8/1/2016	SHEET 3 OF 3

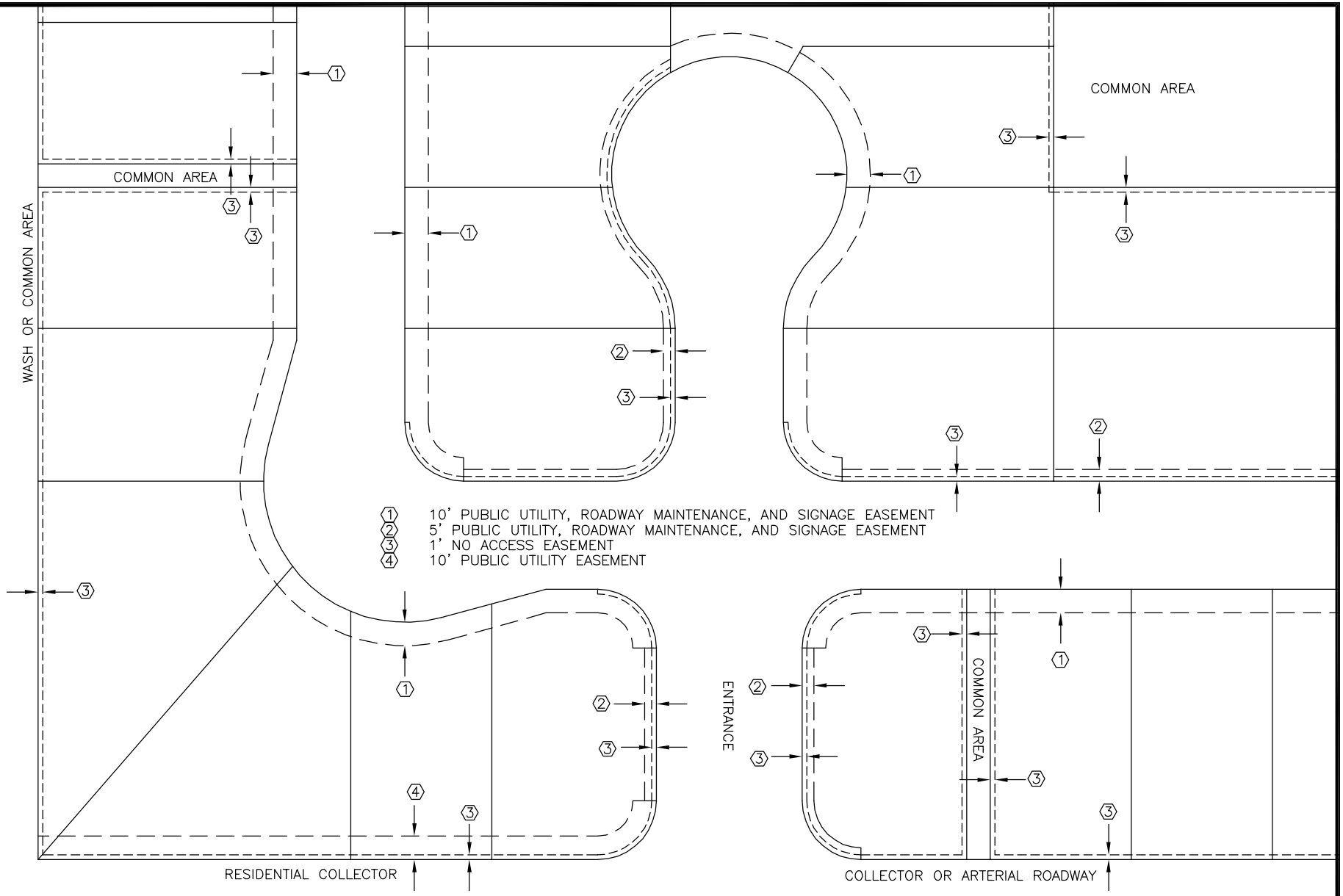

NOT TO SCALE

APPROVED FOR DISTRIBUTION:

Keith E. Brann, P.E.,
Town Engineer

EXPIRES 6/30/2019

Registered Professional Engineer (Civil) CERTIFICATE NO. 40845 KEITH EDWARD BRANN Date Signed 11-18-16 ARIZONA, U.S.A.

TOWN OF MARANA 1977 ARIZONA

STANDARD DETAIL		DETAIL NO:
TYPICAL STREET EASEMENTS		190-4
DATE: 8/1/2016	REVISED:	SHEET 1 OF 1

Town of Marana Utility Easement Requirements

1) Easements shall be exclusive Town of Marana wet utility easement with maximum 5' encroachment by a PUE.
2) Easement width shall be increased by 5' for every 2' water line is buried below the minimum as required by the May 2009 or subsequent version of the Town of Marana Utility Department General Notes and Standard Details.
3) Easement width shall be increased by 10' for every additional variety of wet utility (potable water, non potable water, sewer). For example, the easement width shall be increased to 35' if two types of wet utilities are located within the easement, and to 45' if all three types of wet utilities are located within the easement.
4) Easement width shall increase by 5' where the easement overlaps a vertical drop of 3 or more feet where the slope is greater than 3:1 horizontal to vertical. The easement width shall increase by 10' if the slope exceeds 2:1 horizontal to vertical.
5) The maximum wet utility easement, including increases for depth, PUE encroachment, additional wet utilities and slope, shall not be greater than 50'.
6) Wet utility line shall be a minimum of 5' from the edge of the easement.
7) Wet utility line shall be set back an additional 2' from the edge of the easement for every 5' in depth the line is buried below the minimum depth.
8) A 15' x 15' easement area outside of the normal easement width shall be provided for all fire hydrants.
9) A 15' x 15' easement area outside of the normal easement width shall be provided for all meters, valves and fire line stub outs.
10) Where Terrain and/or Geology warrant an exception to these standards, a waiver may be granted by the Town Engineer or his designee in which all off the following apply:
   a) A showing of good and sufficient cause
   b) A determination that failure to grant the waiver would result in exceptional hardship to the development.
   c) The waiver is determined to be the minimum relief necessary.
   d) Other mitigating design elements are utilized such as ductile iron pipe with restrained joints or other improvements as directed by the utilities engineer.

Cost shall not be a determining factor in the granting of waivers.

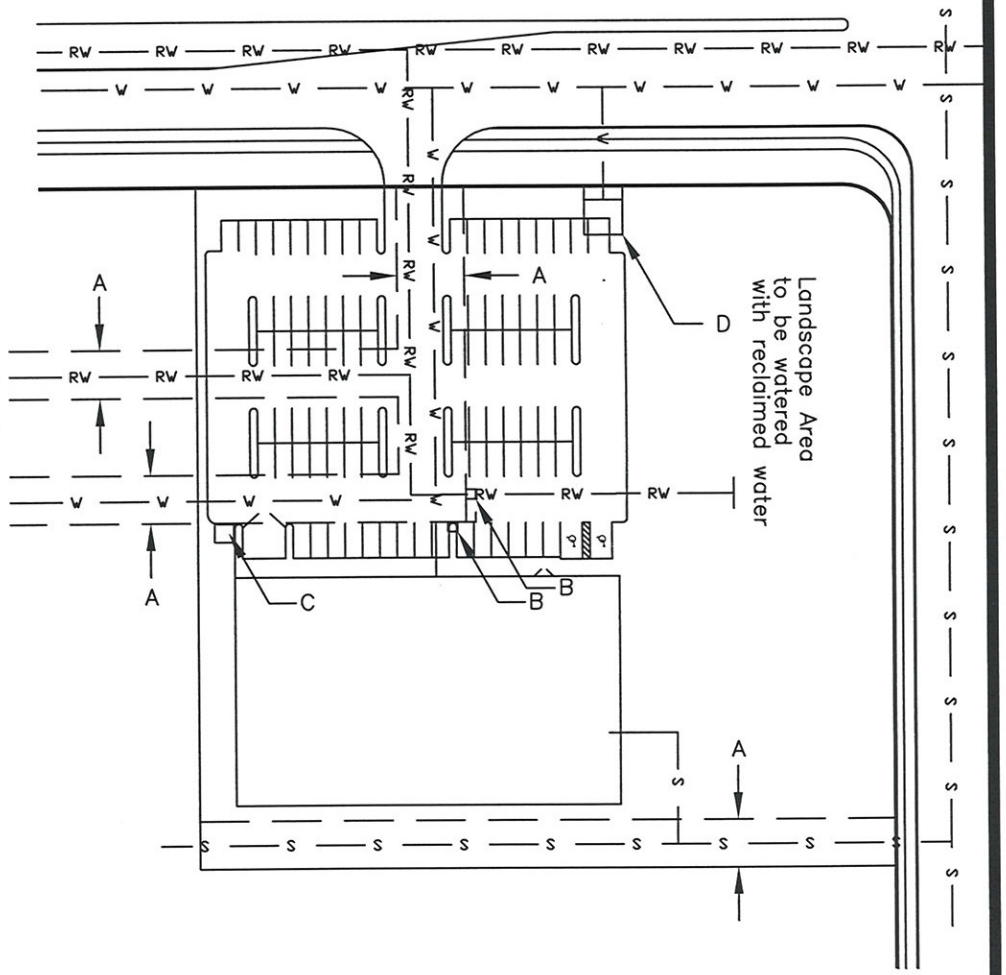

LEGEND

— W — Potable Water
— RW — Reclaimed Water
— S — Sewer

A – MINIMUM 25 FEET EASEMENT
B – 15'X15' EASEMENT FOR METER
C – 15'X15' EASEMENT FOR HYDRANT
D – 15'X15' EASEMENT FOR FIRE LINE STUBOUT

NOT TO SCALE

APPROVED FOR DISTRIBUTION:

Keith E. Brann, P.E.,
Town Engineer

Paul Stephen Baughman

Registered Professional Engineer (Civil) CERTIFICATE NO. 48654 PAUL STEPHEN BAUGHMAN DATE SIGNED 12-24-09 ARIZONA, U.S.A. Expires 9/30/2011

TOWN OF MARANA ARIZONA 1977

MARANA UTILITY STANDARDS		DETAIL NO:
TYPICAL UTILITY EASEMENTS		500-1
DATE: 8/19/2009	REVISED: 12/24/2009	SHEET 1 OF 1

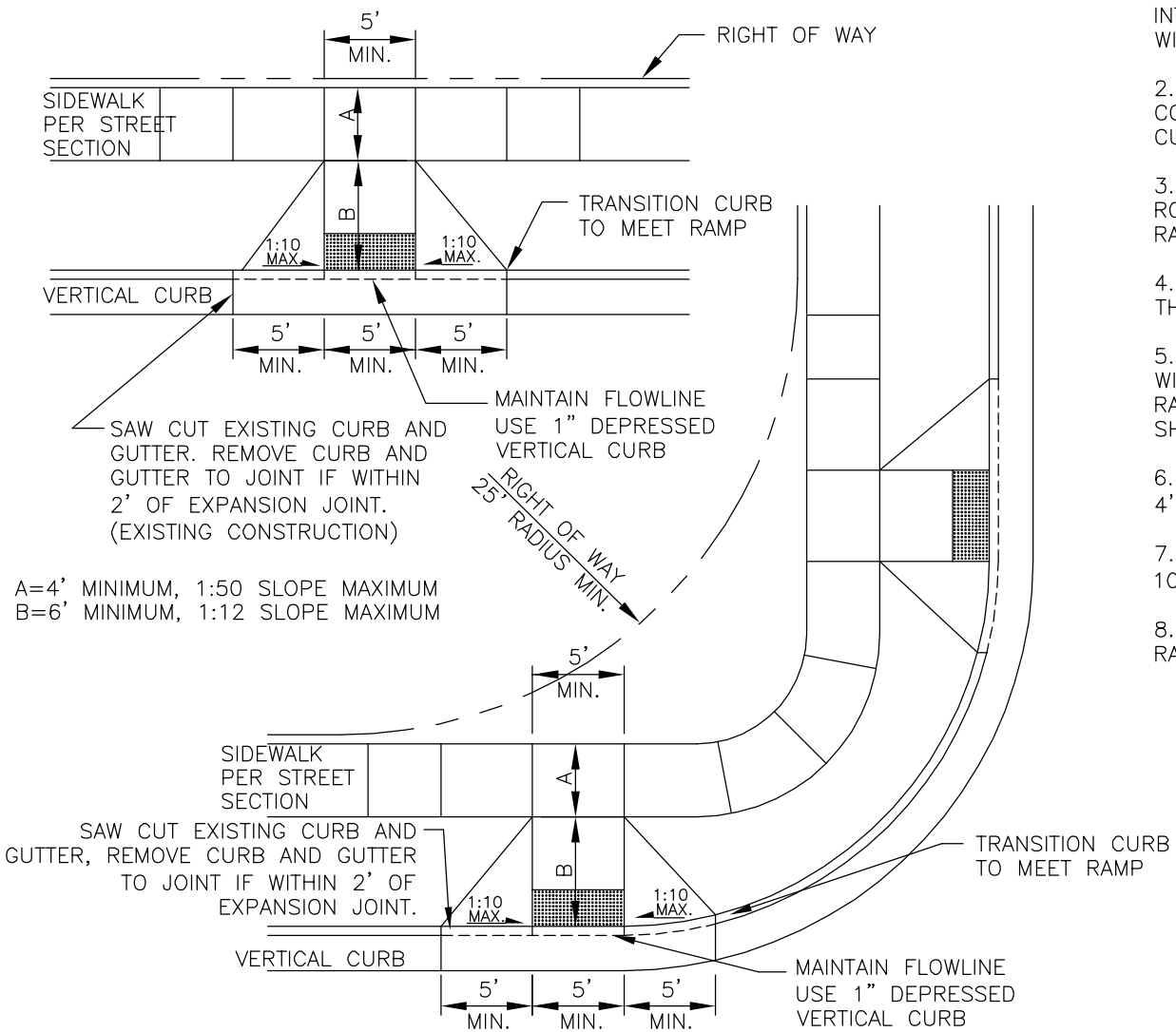

NOTES:

1. CURB RAMPS, INCLUDING LANDING AND THE INTERCONNECTING SIDEWALK ARE TO BE CONTAINED WITHIN THE RIGHT-OF-WAY.

2. DETECTABLE WARNING SURFACE SHALL BE CONSTRUCTED 2 INCHES AWAY FROM DEPRESSED CURB.

3. CURB RAMPS SHALL BE PERPENDICULAR TO ROADWAY CENTERLINE AND SHALL ALIGN WITH RAMPS ACROSS STREET.

4. GRADES ON SIDEWALKS LEADING TO OR FROM THE RAMPS SHALL FOLLOW CURB GRADES.

5. THE INTERCONNECTING SIDEWALK LOCATED WITHIN THE RADIUS AND BETWEEN THE TWO CURB RAMPS IS REQUIRED AND ITS RUNNING SLOPE SHALL NOT EXCEED 1:20.

6. STOP BARS, IF REQUIRED, SHALL BE LOCATED 4' IN ADVANCE OF ANY CROSSWALK STRIPING.

7. CURB INLETS SHALL NOT BE LOCATED WITHIN 10' OF A CURB RAMP.

8. GUTTER SHALL PROVIDE SMOOTH TRANSITION TO RAMPS.

EXPIRES 6/30/2019

NOT TO SCALE

APPROVED FOR DISTRIBUTION:

Keith E. Brann, P.E.,
Town Engineer

Registered Professional Engineer (Civil) CERTIFICATE NO. 40845 KEITH EDWARD BRANN Date Signed 1-18-16 ARIZONA, U.S.A.

TOWN OF MARANA 1977 ARIZONA

STANDARD DETAIL		DETAIL NO:
TYPE 1 CURB RAMPS		600-1
DATE: 10/2004	REVISED: 8/1/2016	SHEET 1 OF 2

SECTION THROUGH RAMP

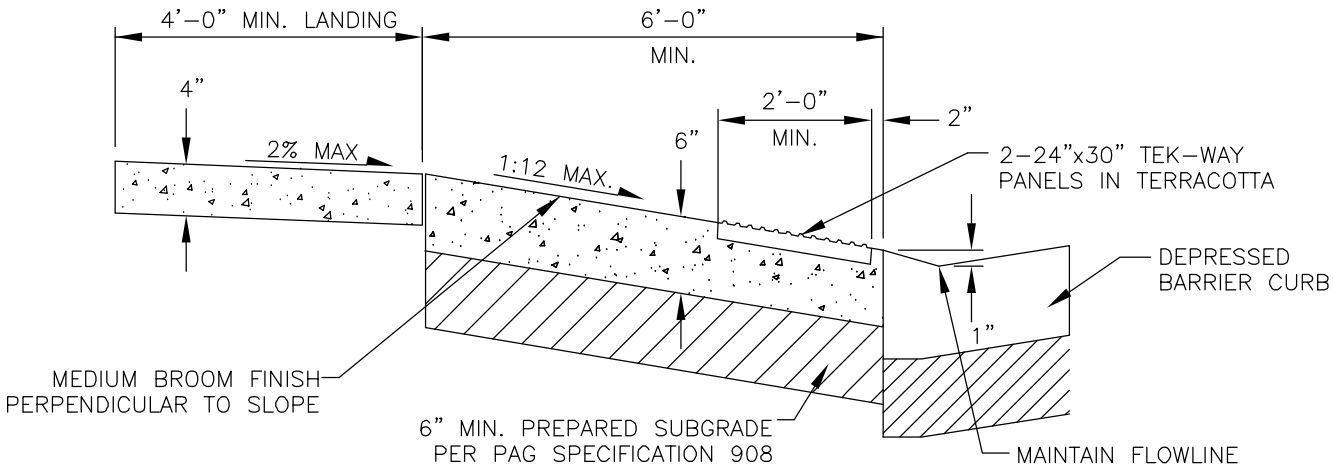

FRONT END VIEW

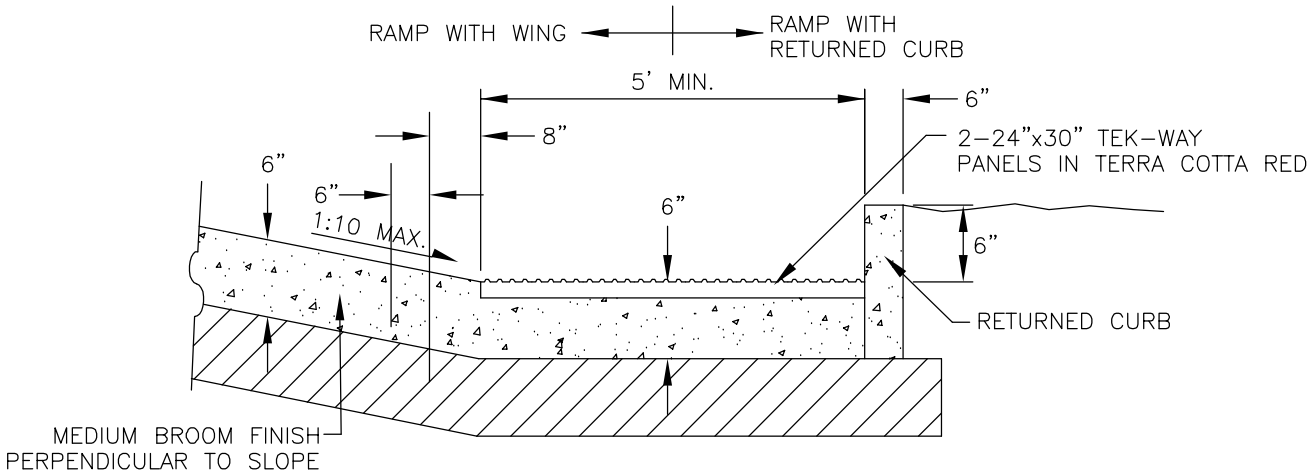

NOTES:

9. DETECTABLE WARNING SURFACE TO CONSIST OF TWO TEK–WAY PANELS OF SIZE 24 INCHES BY 30 INCHES. COLOR OF PANELS TO BE TERRACOTTA.

10. TEK–WAY PANELS TO BE INSTALLED PER MANUFACTURER'S RECOMMENDATIONS. DETAIL ASSUMES SETTING PANELS IN WET CONCRETE. PROVIDE 1 INCH CAVITY IF SETTING PANELS SEPARATE FROM CONCRETE POUR.

11. PANELS TO BE PROTECTED FROM CONSTRUCTION DEBRIS/DIRT UNTIL OVERALL PROJECT COMPLETE.

12. ALTERNATE SYSTEMS SHALL HAVE DETECTABLE WARNING THAT CONSISTS OF RAISED TRUNCATED DOMES WITH A DIAMETER OF 0.9" AT BOTTOM, 0.4" AT TOP, AND A NOMINAL HEIGHT OF 0.2" AND A NOMINAL CENTER TO CENTER SPACING OF 2.35". COLOR MUST BE OF A DULL RED HUE. ALTERNATE SYSTEMS MUST BE APPROVED BY THE TOWN ENGINEER.

13. DEPRESSED CURB HEIGHT CALCULATED TO ACHEIVE A 1:12 SLOPE FROM THE FLOWLINE TO THE TOP OF DEPRESED CURB FOR STANDARD BARRIER CURB USED IN THE TOWN OF MARANA AND MAY NOT APPLY TO ALL SITUATIONS. THE CONTROLLING FACTOR OF ALTERNATE DESIGNS SHALL BE A 1:12 MAXIMUM SLOPE FROM FLOWLINE TO TOP OF DEPRESSED CURB.

NOT TO SCALE

APPROVED FOR DISTRIBUTION:

Keith E. Brann, P.E.,
Town Engineer

EXPIRES 6/30/2019

Registered Professional Engineer (Civil) CERTIFICATE NO. 40845 KEITH EDWARD BRANN Date Signed 6-18-16 ARIZONA, U.S.A.

TOWN OF MARANA 1977 ARIZONA

STANDARD DETAIL		DETAIL NO:
TYPE 1 CURB RAMPS		600–1
DATE: 10/2004	REVISED: 8/1/2016	SHEET 2 OF 2

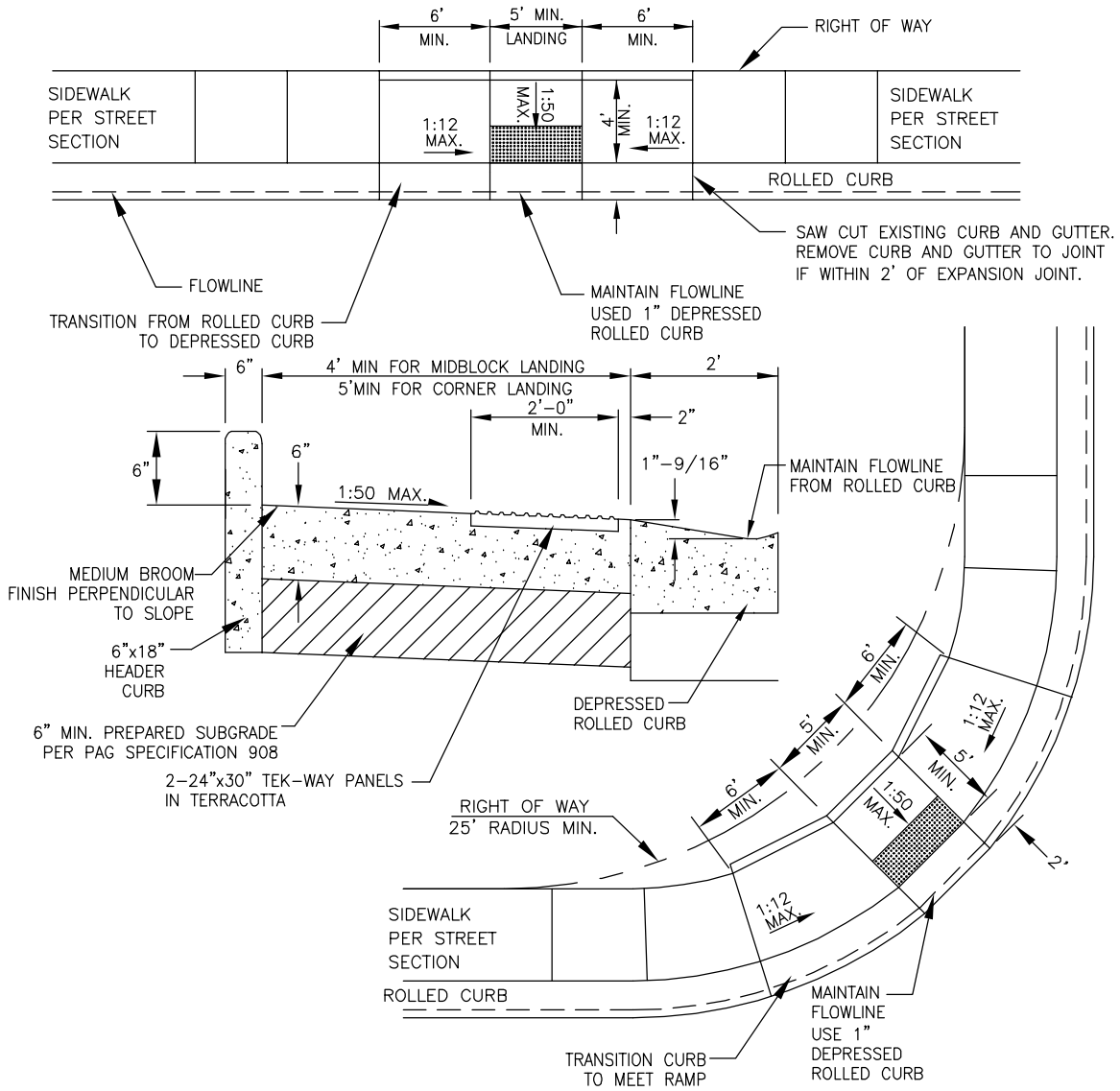

NOTES:

1. GRADES ON SIDEWALKS LEADING TO AND FROM THE RAMPS SHALL FOLLOW CURB GRADES.

2. CURB INLETS SHALL NOT BE LOCATED WITHIN 10' OF A CURB RAMP.

3. GUTTER SHALL PROVIDE A SMOOTH TRANSITION THROUGH THE RAMP.

4. DETECTABLE WARNING SURFACE SHALL BE CONSTRUCTED 2 INCHES AWAY FROM DEPRESSED CURB.

5. DETECTABLE WARNING SURFACE TO CONSIST OF TWO TEK-WAY PANELS OF SIZE 24 INCHES BY 30 INCHES. COLOR OF PANELS TO BE TERRACOTTA.

6. TEK-WAY PANELS TO BE INSTALLED PER MANUFACTURER'S INSTRUCTIONS. DETAIL ASSUMES SETTING PANELS IN WET CONCRETE. PROVIDE 1 INCH CAVITY IF SETTING PANELS SEPARATE FROM CONCRETE POUR.

7. PANELS TO BE PROTECTED FROM CONSTRUCTION DEBRIS/DIRT UNTIL OVERALL PROJECT COMPLETE.

8. ALTERNATE SYSTEMS SHALL HAVE DETECTABLE WARNING THAT CONSISTS OF RAISED TRUNCATED DOMES WITH A DIAMETER OF 0.9" AT BOTTOM, 0.4" AT TOP, AND A NOMINAL HEIGHT OF 0.2" AND A NOMINAL CENTER TO CENTER SPACING OF 2.35". COLOR MUST BE OF A DULL RED HUE. ALTERNATE SYSTEMS MUST BE APPROVED BY THE TOWN ENGINEER.

9. DEPRESSED CURB HEIGHT CALCULATED TO ACHEIVE A 1:12 SLOPE FROM THE FLOWLINE TO THE TOP OF DEPRESED CURB FOR STANDARD ROLLED CURB USED IN THE TOWN OF MARANA AND MAY NOT APPLY TO ALL SITUATIONS. THE CONTROLLING FACTOR OF ALTERNATE DESIGNS SHALL BE A 1:12 MAXIMUM SLOPE FROM FLOWLINE TO TOP OF DEPRESSED CURB.

NOT TO SCALE

APPROVED FOR DISTRIBUTION:

Keith E. Brann, P.E.,
Town Engineer

EXPIRES 6/30/2019

Registered Professional Engineer (Civil) CERTIFICATE NO. 40845 KEITH EDWARD BRANN Date Signed 1-18-16 ARIZONA, U.S.A.

TOWN OF MARANA 1977 ARIZONA

STANDARD DETAIL		DETAIL NO:
TYPE 2 CURB RAMPS		600-2
DATE: 10/2004	REVISED: 8/1/2016	SHEET 1 OF 1

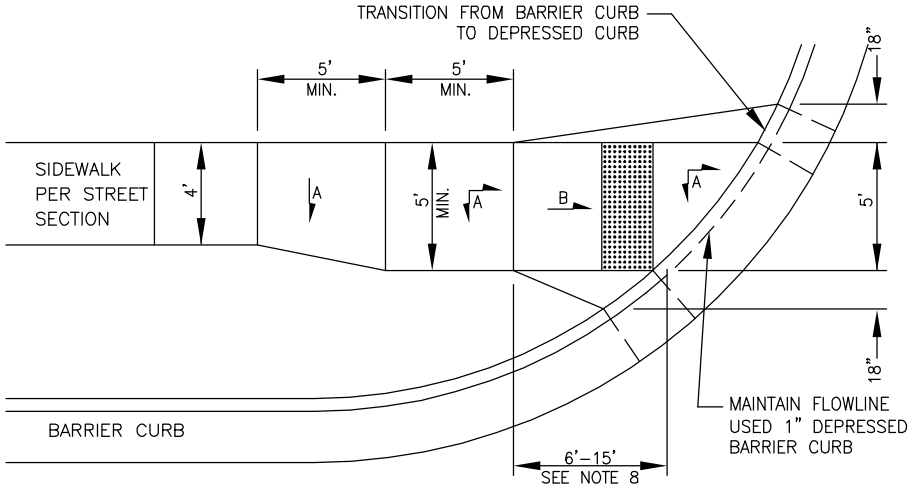

TYPE 3

A 1:50 MAXIMUM SLOPE
B 1:12 MAXIMUM SLOPE, SEE NOTE 8

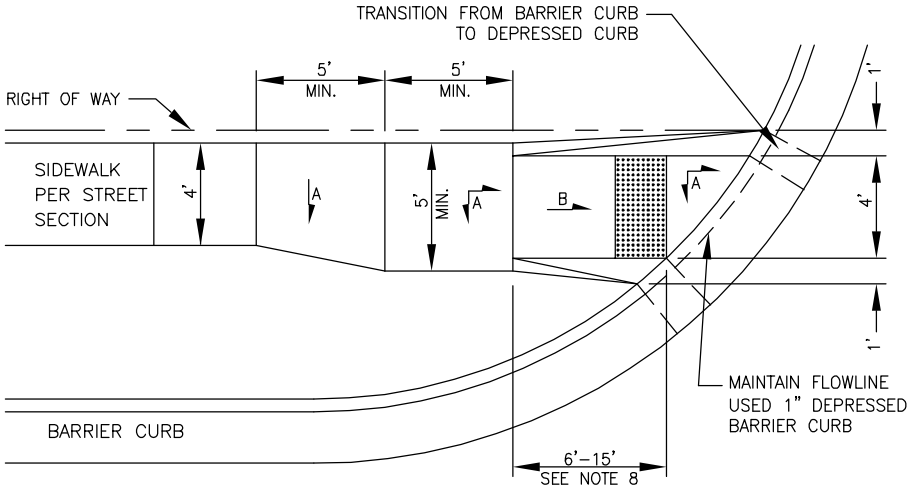

TYPE 3A

LIMITED RIGHT OF WAY WITH CURBWAY

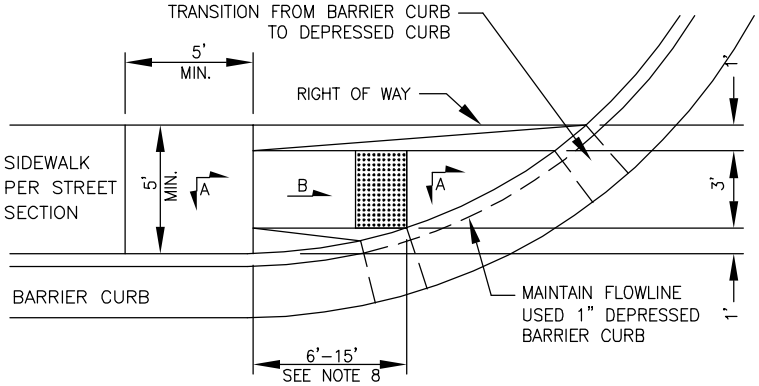

TYPE 3B

LIMITED RIGHT OF WAY WITHOUT CURBWAY

EXPIRES 6/30/2019

NOT TO SCALE

APPROVED FOR DISTRIBUTION:

Keith E. Brann, P.E.,
Town Engineer

Registered Professional Engineer (Civil)
CERTIFICATE NO. 40845
KEITH EDWARD BRANN
Date Signed 1-18-16
ARIZONA, U.S.A.

TOWN OF MARANA ARIZONA 1977

STANDARD DETAIL		DETAIL NO:
TYPE 3 CURB RAMPS		600-3
DATE: 10/2004	REVISED: 8/1/2016	SHEET 1 OF 2

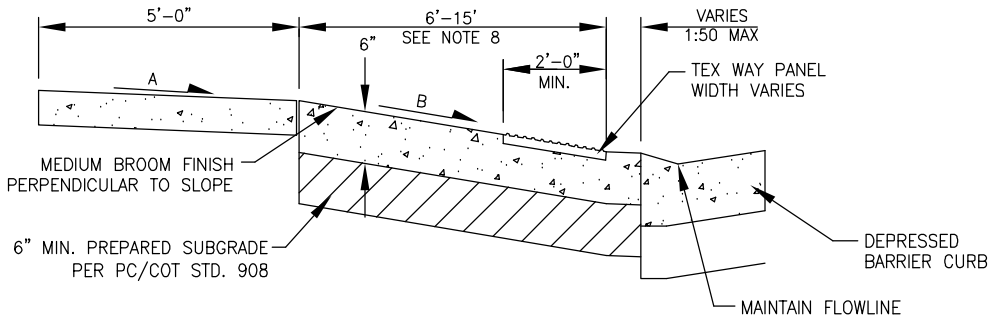

A 1:50 MAXIMUM SLOPE
B 1:12 MAXIMUM SLOPE, SEE NOTE 8

1. GRADES ON SIDEWALKS LEADING TO AND FROM THE RAMPS SHALL FOLLOW CURB GRADES.

2. CURB INLETS SHALL NOT BE LOCATED WITHIN 10' OF A CURB RAMP.

3. GUTTER SHALL PROVIDE A SMOOTH TRANSITION THROUGH THE RAMP.

4. DETECTABLE WARNING SURFACE TO CONSIST OF TWO TEK–WAY PANELS OF SIZE 24 INCHES BY 30 INCHES FOR TYPE 3 RAMPS AND SIZE 24 INCHES BY 24 INCHES FOR TYPE 3A AND 3B RAMPS – CUT AS NEEDED. COLOR OF PANELS TO BE TERRACOTTA.

5. TEK–WAY PANELS TO BE INSTALLED PER MANUFACTURER'S INSTRUCTIONS. DETAIL ASSUMES SETTING PANELS IN WET CONCRETE. PROVIDE 1 INCH CAVITY IF SETTING PANELS SEPARATE FROM CONRETE POUR.

6. ALTERNATE SYSTEMS SHALL HAVE DETECTABLE WARNING THAT CONSISTS OF RAISED TRUNCATED DOMES WITH A DIAMETER OF 0.9" AT BOTTOM, 0.4" AT TOP, AND A NOMINAL HEIGHT OF 0.2" AND A NOMINAL CENTER TO CENTER SPACING OF 2.35". COLOR MUST BE OF A DULL RED HUE. ALTERNATE SYSTEMS MUST BE APPROVED BY THE TOWN ENGINEER.

7. DEPRESSED CURB HEIGHT CALCULATED TO ACHEIVE A 1:12 SLOPE FROM THE FLOWLINE TO THE TOP OF DEPRESED CURB FOR STANDARD BARRIER CURB USED IN THE TOWN OF MARANA AND MAY NOT APPLY TO ALL SITUATIONS. THE CONTROLLING FACTOR OF ALTERNATE DESIGNS SHALL BE A 1:12 MAXIMUM SLOPE FROM FLOWLINE TO TOP OF DEPRESSED CURB.

8. RAMP LENGTH TO BE A MINIMUM OF 6 FEET. RAMP MUST BE LENGTHENED AS NECESSARY DUE TO ADJACENT STREET SLOPE TO ACHIEVE EITHER A 1:12 MAXIMUM SLOPE UP TO A MAXIMUM LENGTH OF 15 FEET.

NOT TO SCALE

APPROVED FOR DISTRIBUTION:

Keith E. Brann, P.E.,
Town Engineer

EXPIRES 6/30/2019

Registered Professional Engineer (Civil) CERTIFICATE NO. 40845 KEITH EDWARD BRANN Date Signed 1-18-16 ARIZONA, U.S.A.

TOWN OF MARANA 1977 ARIZONA

STANDARD DETAIL		DETAIL NO:
TYPE 3 CURB RAMPS		600–3
DATE: 10/2004	REVISED: 8/1/2016	SHEET 2 OF 2

1. ALL IRRIGATION LINES GREATER THAN 3/4" IN DIAMETER SHALL BE PLACED AS SHOWN.
2. TREES SHOULD BE PLACED TO THE REAR OF A CURBWAY OR JUST OFF THE CENTERLINE OF A MEDIAN.
3. DEEP ROOT WATERING SYSTEMS ARE TO BE USED ON ALL LANDSCAPE PALETTES WITH TREES IN CURBWAYS OR MEDIANS.
4. 36" DEEP ROOT BARRIERS REQUIRED FOR ALL TREES WITHIN CURBWAYS.
5. 36" DEEP ROOT BARRIERS REQUIRED FOR MEDIAN TREES CLOSER THAN 6 FEET FROM CURB.
6. WHEN REQUIRED, ROOT BARRIERS SHALL EXTEND 5 FEET TO EITHER SIDE OF TREE MEASURED PERPENDICULAR TO PAVEMENT/CURB. TOP OF ROOT BARRIER EVEN WITH TOP OF FINISHED EARTHWORK/BELOW ROCK MULCH.

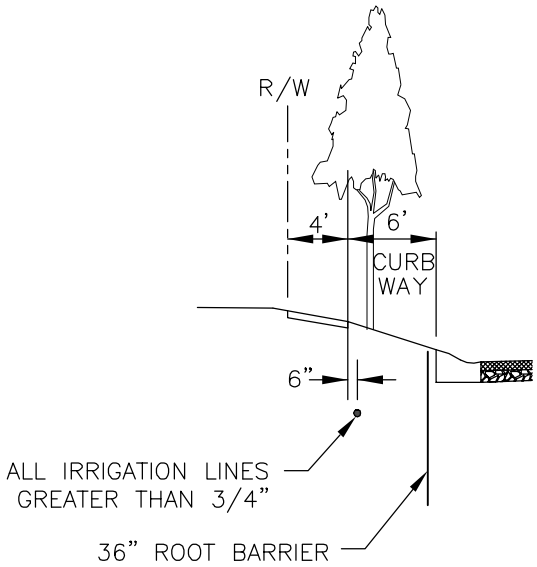

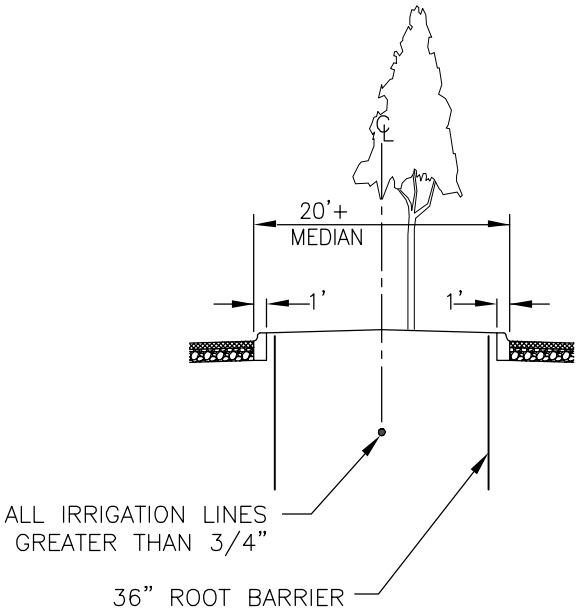

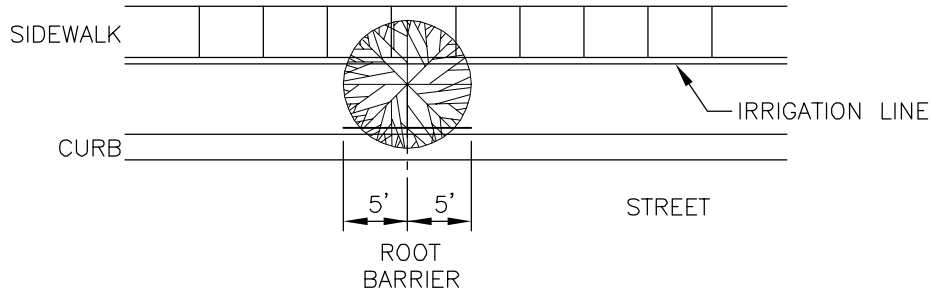

EXPIRES 6/30/2019

NOT TO SCALE

APPROVED FOR DISTRIBUTION:

Keith E. Brann, P.E.,
Town Engineer

Registered Professional Engineer (Civil) CERTIFICATE NO. 40845 KEITH EDWARD BRANN Date Signed 1-18-16 ARIZONA, U.S.A.

TOWN OF MARANA 1947 ARIZONA

STANDARD DETAIL		DETAIL NO:
LANDSCAPING PROTECTION		610–1
DATE: 8/1/2016	REVISED:	SHEET 1 OF 1

TYPICAL SIGNING AND STRIPING

NOTES:

1. See PCDOT/COTDOT Pavement Marking Standards Detail 2–8.
2. See PCDOT/COTDOT Pavement Marking Standards Detail 5–13.
3. See Sheet 2 of 3 for Sign Details
4. Cross Section A–A (Truck Apron), See sheet 3 of 3
5. Size and location of islands to be determined during design.
6. Landscaping shall be approved by the Traffic Engineering Division.
7. All signs shall be installed within the Town rights–of–way.

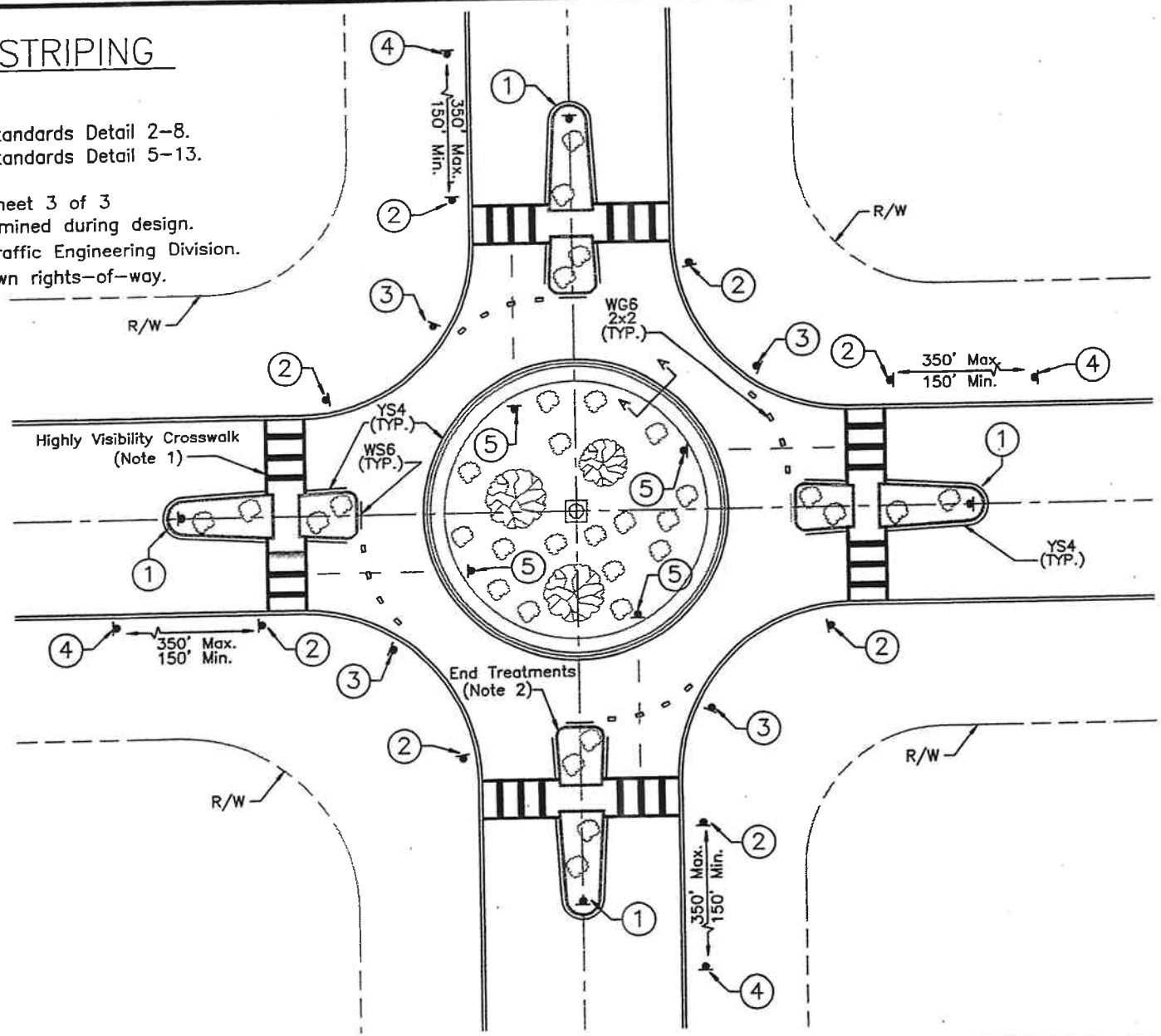

APPROVED FOR DISTRIBUTION:

Keith E. Brann, P.E.,
Acting Town Engineer

Registered Professional Engineer (Civil) CERTIFICATE NO. 38119 SCOTT A. LESKA Date Signed 9/14/05 ARIZONA, U.S.A.

TOWN OF MARANA 1977 ARIZONA

MARANA SUBDIVISION STREET STANDARDS		DETAIL NO:
ROUNDABOUT		700–1
DATE: 9/14/05	REVISED:	SHEET 1 OF 3

SIGN DETAILS

NOTES:

1. ALL WARNING AND REGULATORY SIGNS SHALL BE TYPE III (HIGH INTENSITY) SHEETING, UNLESS OTHERWISE INDICATED.
2. ALL THE WARNING AND YIELD SIGNS ON COLLECTOR OR ARTERIAL ROADS NEED TO BE 36"
3. ALL THE WARNING AND YIELD SIGNS ON RESIDENTIAL ROADS NEED TO BE 30"
4. SIGNS MAY BE MODIFIED AND LOCATIONS ADJUSTED TO FIT CONDITIONS AS DIRECTED BY THE JURISDICTION TRAFFIC ENGINEER OR DESIGNEE.

1

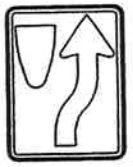

R4-7
(24"x30")

2

W11-2
30" OR 36"
FLUORESCENT YELLOW-GREEN

W16-7p
(24"x12") OR (30"x18")
FLUORESCENT YELLOW-GREEN

3

R1-2
30" OR 36"

TO TRAFFIC
IN CIRCLE

Special
(24"x18") OR (30"x24")
BLACK ON WHITE

4

W2-6
30" OR 36"
BLACK ON YELLOW

TRAFFIC
CIRCLE

W16-12p
(24"x18") OR (30"x24")
BLACK ON YELLOW

5

R6-1R
(36"x12")

APPROVED FOR DISTRIBUTION:

Keith E. Brann, P.E.,
Acting Town Engineer

Registered Professional Engineer (Civil)
Certificate No. 38119
SCOTT A. LESKA
Date Signed 9-14-05
ARIZONA, U.S.A.

TOWN OF MARANA ARIZONA 1977

MARANA SUBDIVISION STREET STANDARDS		DETAIL NO:
ROUNDABOUT		700-1
DATE: 9/14/05	REVISED:	SHEET 2 OF 3

MOUNTABLE CONCRETE CURB, GUTTER AND TRUCK APRON COMBINATION

NOTES:

1. WHEN THE SLOPE OF THE PAVEMENT IS AWAY FROM THE CURB AND GUTTER THE SLOPE OF THE GUTTER SHALL MATCH THE PAVEMENT CROSS SLOPE.
2. TRUCK APRON SHALL BE CLASS I CONCRETE, COLORED FULL DEPTH WITH RED PIGMENT AS APPROVED BY THE TOWN ENGINEER OR DESIGNEE. (14 LBS. RED PIGMENT PER 94 LB. STOCK OF CEMENT, SCORED IN 12" BLOCKS. ONLY MINOR VARIATIONS IN COLOR WILL BE ACCEPTED.)
3. INSTALL 1/2" EXPANSION JOINT MATERIAL IN CURB AND GUTTER, AND IN TRUCK APRON AT 100' INTERVALS, AT STRUCTURES, AND AT BEGINING AND END OF CURVES. CONTRACTION JOINTS SHALL BE PLACED AT 10' INTERVALS.
4. THE CONSTRUCTION JOINT AND THE 1/2" EXPANDABLE JOINT MATERIAL CAN BE ELIMINATED IF CURB POURED MONOLITHIC WITH TRUCK APRON.

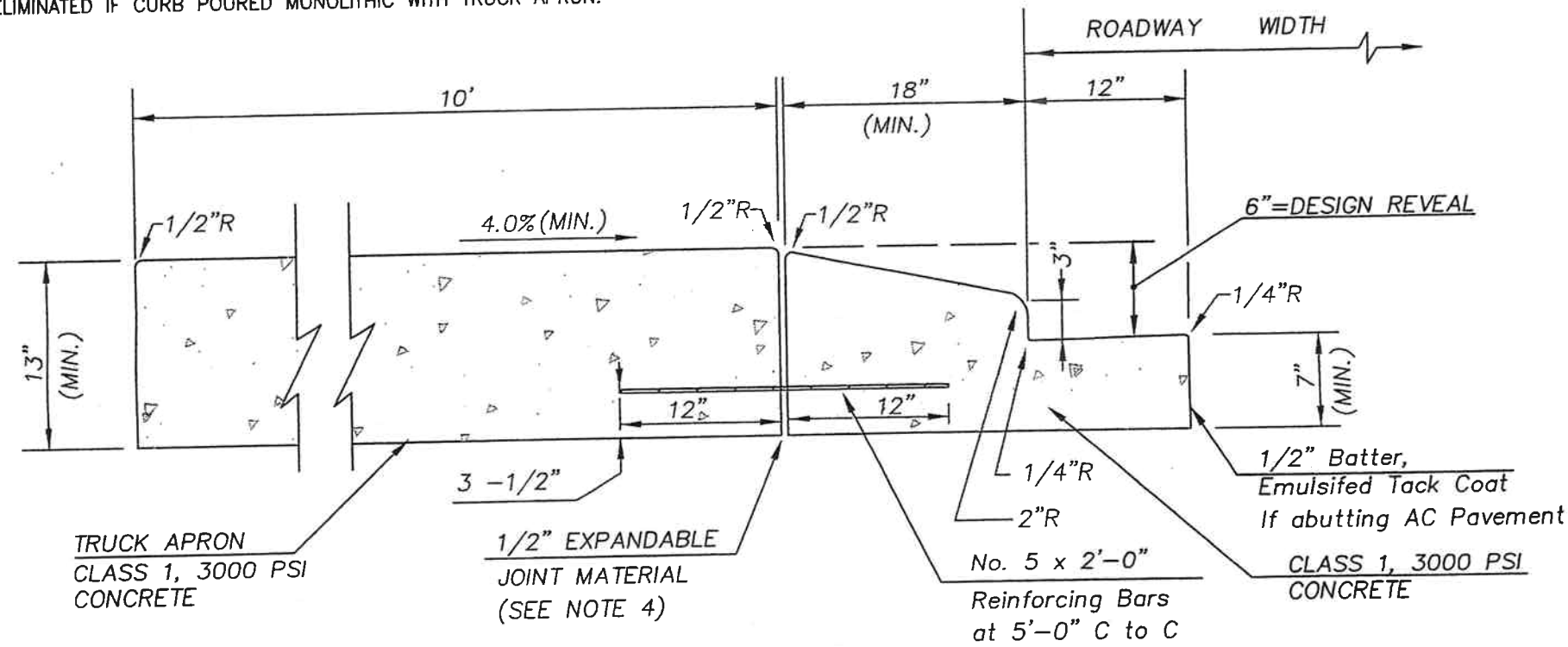

Cross section A-A

APPROVED FOR DISTRIBUTION:

Keith E. Brann, P.E.,
Acting Town Engineer

Registered Professional Engineer (Civil) Certificate No. 38119 SCOTT A. LESKA Date Signed ARIZONA, U.S.A.

TOWN OF MARANA ARIZONA 1977

MARANA SUBDIVISION STREET STANDARDS		DETAIL NO:
ROUNDABOUT		700-1
DATE: 9/14/05	REVISED:	SHEET 3 OF 3

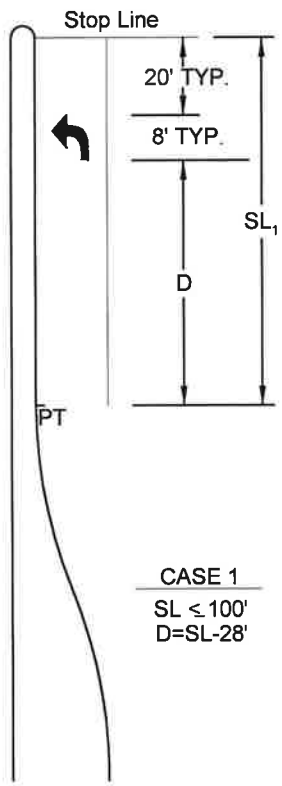

CASE 1

SL ≤ 100'
D=SL-28'

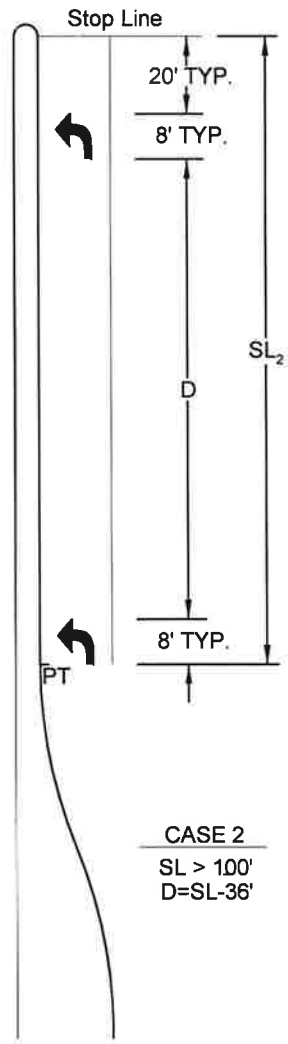

CASE 2

SL > 100'
D=SL-36'

KEY

SL - Storage Length (feet)

D - Distance between Arrows (feet)

NOTES:

1. Pavement Arrow Markings shall be used at left and right turn lanes at signalized intersections.
2. SL dimension is from stop line to end of turn lane.
3. For dual left lanes, dimensions shall be the same for each lane.
4. In some situations, the Town may require Pavement Arrow Markings at unsignalized intersections.

NOT TO SCALE

APPROVED FOR DISTRIBUTION:

Keith E. Brann, P.E.,
Town Engineer

Expires 8/30/2020

Registered Professional Engineer (Civil) 42727 FAUSTO B. BURRUEL 9/19/2017 Date Signed ARIZONA, U.S.A.

MARANA AZ

STANDARD DETAIL		DETAIL NO:
Spacing between Pavement Arrow Markings for Turn Lanes		720–1
DATE: 9/19/2017	REVISED:	SHEET 1 OF 1

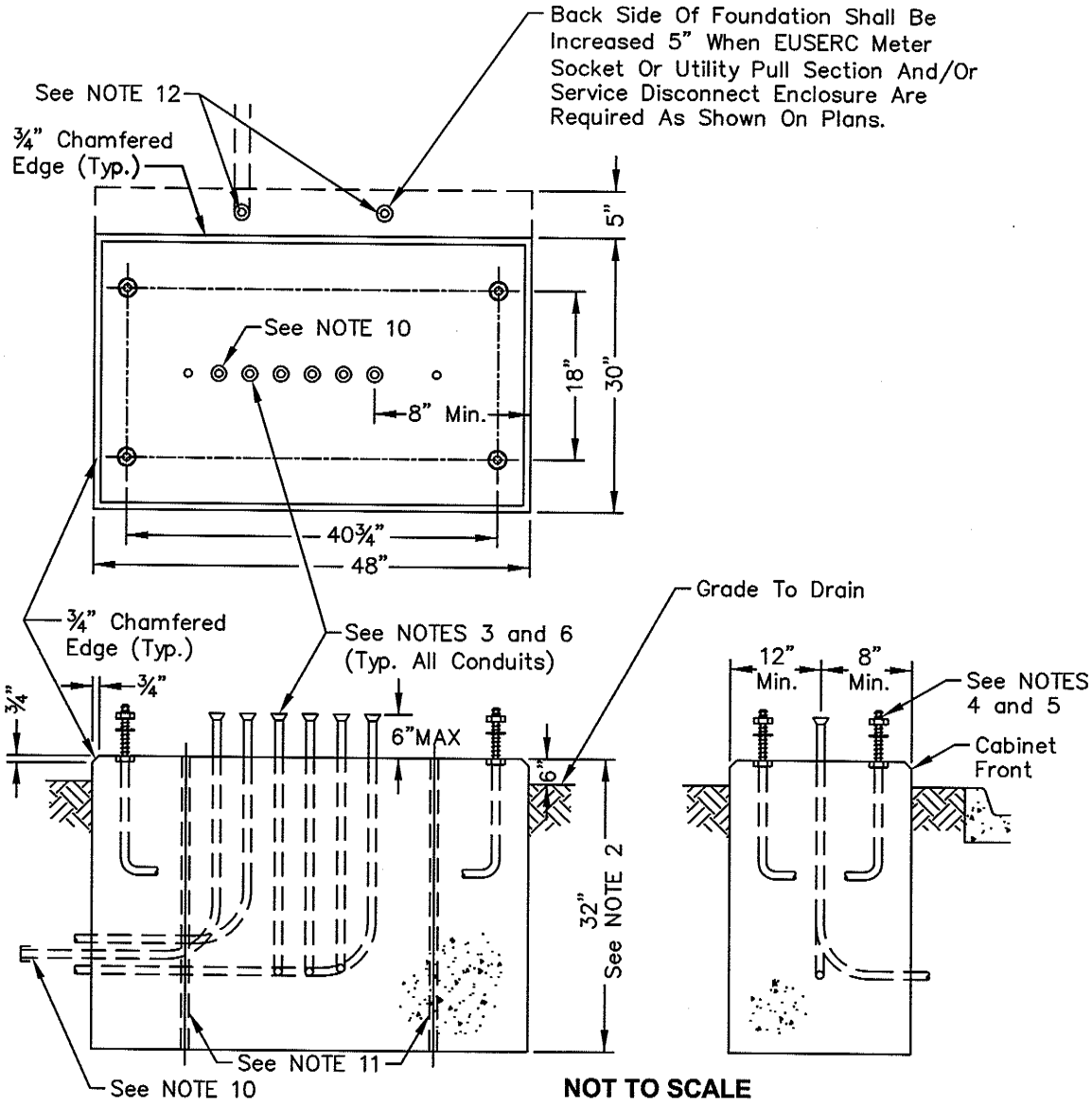

NOT TO SCALE

NOTES:

1. All materials and construction shall conform to the requirements of the Special Provisions and Standard Specifications.
2. Unstable soil may require deeper foundations. See Special Provisions and Standard Specifications.
3. For conduit size, location, and quantity, see Project Plans.
4. Anchor bolts shall be galvanized ¾" x 12" x 4" complete with nuts and washers.
5. Anchor bolt's projection above foundation shall be 2" min. 2½" max.
6. Conduit projection above foundation shall be 2½" min. 4" max.
7. Use an approved silicon sealer RTV type gray in color or clear, between cabinet and foundation.
8. In unpaved areas a raised concrete pad foundation (36" x width of cabinet foundation x 4" thick) shall be installed in front of the cabinet (door side). Pad shall be set 2" below the foundation elevation. Slope pad away from cabinet at a 50:1 slope.
9. All cabinet foundations shall have two (2) ¾" diameter x 10' long bonded copper ground rod with clamp.
10. Install 1–4" conduit for future use, stubbed and capped 24" past the edge of the foundation as directed by the Town Engineer or His/Her Designee.
11. 1" sleeve (for each ground rod) shall be inserted when foundation is poured. Install one (1) ¾" diameter x 10' long bonded copper ground rod in each sleeve.
12. 4" sleeves for service conduits if an Electrical Utility Service Entrance Requirement Committee (EUSERC) meter socket or EUSERC utility pull section and/or service disconnect enclosure are required.
13. Prior to pouring concrete foundation, final approval of conduit placement from Town Engineer or His/Her Designee shall be obtained.
14. Contractor is responsible to make sure cabinet fits on bolt pattern.

APPROVED FOR DISTRIBUTION:

9/9/2005

Keith E. Brann, P.E., Acting Town Engineer — Date

Registered Professional Engineer (Civil) — 38119 — SCOTT A. LESKA — Date Signed 9/9/05 — ARIZONA, U.S.A.

TOWN OF MARANA ARIZONA 1977

STANDARD DETAIL		DETAIL NO:
FOUNDATION FOR TYPE IV, V CONTROLLER CABINETS		730–210
DATE: 9/9/05	REVISED:	SHEET 1 OF 1

GENERAL TRAFFIC SIGNAL RESPONSIBILITIES:

1. Materials installed as part of this Project shall be furnished and installed in accordance with the requirements of the following table:

	Contractor Furnished	Contractor Installed/ Constructed	Town Furnished	Town Installed
Traffic Signal Poles and Mast Arms	X	X		
Steel Poles and Anchor Bolts (With Nuts and Washers)	X	X		
Concrete Pole Foundation	X	X		
Type IV Traffic Signal Controller Cabinet(s) With Controller(s) and All Auxiliary/Incidental Equipment			X	X
Controller Cabinet Concrete Foundation with Anchor Bolts	X	X		
Electrical Service Pedestal			X	X
Electrical Service Pedestal Concrete Foundation	X	X		
All Wiring and Cabling (Including Bare Bond Wire and Pull Ropes)	X	X		
Concrete Pull Boxes	X	X		
Electrical Conduit	X	X		
Ground Rods and Connectors	X	X		
Traffic Signals and Mounting Assemblies	X	X		
Pedestrian Signals and Mounting Assemblies	X	X		
Pedestrian Push Button Stations with Signs	X	X		
Luminaires and Photocells	X	X		
Vehicle Detection Loops	X	X		
Emergency Vehicle Preemption Equipment		X	X	
Emergency Vehicle Preemption Wiring	X	X		
Video Detection System Equipment		X	X	
Video Detection System Wire and Cable		X	X	
Pan/Tilt/Zoom Color–B/W Video Equipment		X	X	
Pan/Tilt/Zoom Color–B/W Cable & Wire		X	X	
Internally Illuminated Street Name Sign(s) or Street Name Sign(s)	X	X		
Regulatory Signing	X	X		
All other appurtenances necessary for the operation of the traffic signal installation(s), except as modified on the Project Plans or as provided in the Special Provisions.	X	X		

GENERAL TRAFFIC SIGNAL RESPONSIBILITIES (CONTINUED):

2. The Contractor shall contact the Town of Marana Traffic Signal Maintenance and Operations Supervisor at (520)382–2500 a minimum of two (2) weeks prior to the scheduled installation of the cabinet(s). The Town of Marana will deliver the cabinet(s) to the Project Site on the day scheduled for installation.

3. The Town of Marana will place the cabinet(s) onto the foundation(s). The Contractor shall be responsible for ensuring that the anchor bolts are positioned such that the cabinet(s) will align properly onto the foundation(s). Contractor shall secure cabinet(s) to the foundation.

4. The Contractor shall be responsible for routing all conductors into the cabinet, and shall identify routing and connections of all cables and conductors as required in the 1994 Pima County/City of Tucson "Standard Specifications for Public Improvements". The Town of Marana staff will terminate the conductors in the cabinet(s).

5. The Contractor shall carefully disassemble and salvage all existing traffic signal and street lighting equipment that is not to remain or be relocated as shown on the Project Plans or as provided in the Special Provisions. All of the salvaged equipment shall be returned to the Town of Marana Operations Center (MOC), 5100 West Ina Road, Tucson AZ, 85743. The salvaged equipment shall be unloaded by the Contractor, as directed by the Town. Contact the Town of Marana Traffic Signal Maintenance and Operations Supervisor at (520) 382–2500 a minimum of two (2) working days (excluding weekends and Town recognized holidays) prior to delivering the equipment.

6. Existing traffic signal operations shall be maintained throughout the duration of the Project as shown on the Project Plans or as called for in the Special Provisions unless approved by the Town Engineer or His/Her Designee.

7. The Contractor shall obtain all required permits and shall be responsible for all traffic control related to the Project and the construction zone. The Contractor shall strictly conform and adhere to the approved Project Traffic Control Plan at all times.

8. The Contractor shall install/construct all items associated with the Project as called for on the Project Plans or in the Special Provisions.

9. The Contractor shall load, transport and unload all items specified on the Project plans supplied by both the Contractor and the Town to the job site, unless specified otherwise by the Engineer. The Contractor shall notify the Town of Marana and its representatives a minimum of two (2) working days (excluding weekends and Town recognized holidays) in advance. Contact the Traffic Signal Maintenance of Operations Supervisor at (520) 382–2500.

Note: It is intended that the Notes herein of the Traffic Signal Standard Responsibilities shall be considered part of the Construction Contract Documents. If the Project Plans differ from the notes herein (Town of Marana Standard Detail 730–400) the Project Plans shall note the change on the Project Plan's General Note Sheet and be edited where appropriate to fit the Project.

APPROVED FOR DISTRIBUTION:

6/20/2006

Keith E. Brann, P.E., Town Engineer — Date

Registered Professional Engineer (Civil) — Certificate No. 38119 — SCOTT A. LESKA — Date signed — ARIZONA, U.S.A.

TOWN OF MARANA ARIZONA 1977

STANDARD DETAIL		DETAIL NO:
GENERAL TRAFFIC SIGNAL RESPONSIBILITIES		730–400
DATE: 9/9/05	REVISED: 06/20/06	SHEET 1 OF 1

GENERAL TRAFFIC SIGNAL NOTES (CONTINUED):

34. The Contractor shall coordinate with the telephone utility public improvement coordinator to verify the location of the telephone connection at each intersection.

35. The Contractor shall "pothole" or hand dig all foundations prior to the placement of all cabinets, and traffic signal and/or street light poles.

36. The Contractor shall not make or begin any excavation, digging or any work associated with moving any earth or ground within any public Town rights-of-way, utility easements, and/or any expressed or implied private property without first determining whether any underground facilities (shown and not shown on the Project Plans) will be encountered, and if so where they are located from each and every public utility, municipal corporation or other entity having the right to bury such underground facility within the public right-of-way, private property or easement within the Project limits. The Contractor shall take all nessesay measures for the location and control of such facilities in a careful and prudent manner.

37. Any equipment and/or utilities within the project (shown or not shown on the plans) that is damaged or destroyed by the contractor shall be repaired or replaced at the sole expense of the Contractor.

38. The Contractor shall immediately report all conflicts regarding the overhead utilities and the Project signal equipment that is to be installed as indicated on the Project Plans to the Town Engineer and the utility of jurisdiction. If required, the Contractor shall coordinate all utility and/or traffic signal equipment relocation as required with the Town, the Engineer of Record and the Utility Company.

39. The Contractor shall pothole all utilities (shown and not shown on the Project plans) prior to boring, trenching, or directional drilling to verify depths and locations.

Note:

It is intended that Notes 1-39 of this Traffic Signal Standard shall be considered as part of the Construction Contract Documents. If the Project Plans differ from the notes herein (Town of Marana Standard Detail 730-401) the Project Plans shall note the change on the Project Plan's General Note Sheet and be edited where appropriate to fit the Project.

It is intended that Notes 40-41 of this Traffic Signal Standard be placed on the Project Plans in their entirety and edited where appropriate to fit the Project.

40. The Design Speed for _____ is _____ mph. The Posted Speed for _____ is _____ mph.

41. The Contractor is advised of the utility contacts as indicated in the following table:

Utility	Contact	Phone No.
Tucson Electric Power Co	Gary Goulin	
QWEST	Steve Johnson	
AT&T Communications	Mike O'Neill	
Comcast Cable Communications	Mike Gin	
Pima County Wastewater Management	Bob Decker	
Southwest Gas Corporation	Robert Daniels	
Sprint Communications	Colin Sword	
Marana Water Department	Brad DeSpain	
Tucson Water Department	Tony Tineo	
Trico Electric Cooperative	Chuck Wilcox	

(The designer shall coordinate, verify, and list all utility companies and contacts within the Project limits, and provide the correct information in the table above.)

APPROVED FOR DISTRIBUTION:

07/14/2006

Keith E. Brann, P.E., Town Engineer — Date

Registered Professional Engineer (Civil) Certificate No. 38119 SCOTT A. LESKA Date Signed 7/14 ARIZONA, U.S.A.

MARANA

STANDARD DETAIL		DETAIL NO:
GENERAL TRAFFIC SIGNAL NOTES		730-401a
DATE: 9/9/05	REVISED: 07/14/2006	SHEET 3 OF 3

GENERAL TRAFFIC SIGNAL NOTES (CONTINUED):

17. IMSA 19–1, 16–conductor solid wire cable shall be installed continuous and unspliced from the controller cabinet to the Type "A" or Type "G" pole on each corner. At locations where there are no Type "A" or Type "G" poles, the 16–conductor cable shall be installed to the No. 7 pull box on that corner for future use with a minimum of 30' slack. See Town of Marana's Traffic Signal Cable Schematic Standard Detail and Traffic Signal Wiring Schematic Standard Detail for details.

18. See Town of Marana Typical Traffic Signal Wiring Schematic for wiring details for Vehicular Signal Heads, Pedestrian Signal Heads, Pedestrian Pushbuttons, and EVPE installations.

19. All vehicle detection loop wire shall be #14 AWG, IMSA 51–5–1985 cable. Detector lead–in cables shall be #14 AWG, IMSA 50–2–1984 cable. The detector lead–in cable shall be continuous and unspliced between the controller cabinet and the pull box adjacent to loop. Provide a minimum of five (5) feet of slack as measured from the lip of the pull box opening in the pull box adjacent to the loop detector.

20. All telephone interconnect cable, and detector lead–in cable shall be continuous and unspliced.

21. The video detection cable shall be installed, continuous and unspliced, from the video camera mounting (attached to the luminaire mast arm) to the controller cabinet.

22. The emergency vehicle preemption sensor cable shall be 3M–Opticom Detector Cable Model No. 138 or approved equal as specified by the Town Engineer or His/Her Designee.

23. The conductors for the emergency vehicle preemption sensor and beacon shall be routed to the traffic signal head at the mast arm tip or as specified on the Project Plans, Special Provisions and/or the Town Engineer or His/Her Designee. Provide lengths as required by the Town Engineer or His/Her Designee.

24. The location of preemption sensors shall be in accordance with Standard Details 730–410 thru 730–417 or as approved by the Town Engineer prior to the installation of the sensors. All vehicle detection loops shall be centered within the pavement of the travel lane or as approved by the Town Engineer.

25. Vehicle Detection Loops shall be installed prior to the final lift of pavement. For loops installed after the final lift, detection loop sawcuts shall be flushed with water under pressure and then dried with air under pressure prior to applying loop sealant.

26. All side by side 6' X 6' loops shall have a separate Detector Loop Lead–in Cable.

27. All signal housings shall be polycarbonate and black. All visors shall be painted black and material approved by the Town Engineer or His/Her Designee prior to ordering and installation.

28. All vehicular signal faces shall be 12 inch and all lenses shall be polycarbonate. All signal indications shall be LED, except the yellow ball and yellow arrow indications mounted overhead on a mast arm, which shall be incandescent. All yellow indications (yellow ball and yellow arrow) within a vehicular signal face, not mounted on an overhead mastarm, shall be LED. All Pedestrian signal faces shall be LED Countdown Style Pedestrian Signal Heads as provided in the MUTCD 2003 ed. (Section 4E.07)

29. There shall be a minimum of two circuits (each with a separate electrical phase) for the intersection safety lighting and Internally Illuminated Street Name Sign (IISNS) circuit. There shall be a minimum of two circuits provided to each pole's hand hole with solid No. 10 AWG THHW conductors. The luminaires shall be wired such that circuit No. 1 luminaires are on its diagonally opposite counterpart. The other diagonally opposing luminaires shall be wired on circuit No. 2. The IISNS shall be wired using the opposite circuit from the luminaire, on the same pole, that the luminaires are wired. All IISNS shall be installed and wired from the pull box to the IISNS unspliced.

30. Three (3) No. 10 AWG–THHW Conductors shall be installed from each luminaire to the pole's adjacent pull box that the luminaire is mounted on and shall be unspliced, leaving a minimum of five (5) feet of slack as measured from the pull box lip opening. Install a 15–amp in–line fuse for each luminaire in the associated #7 pull box.

31. For each luminaire circuit, three (3) conductors, THHW No. 10 AWG, shall be pulled from the power service cabinet to the poles adjacent pull box unspliced.

32. Prior to construction of pole foundations, grade slope to ensure that top of foundations are not exposed more than 6" above final grade. Grade all pole foundations, cabinet foundations, pull boxes and the ilk such that drainage of water flows away from the equipment being constructed and/or installed.

33. The Contractor shall contact the electrical utility public improvement coordinator to verify the service connection requirements and the location of the electric service connection for the traffic signal at each intersection. The Contractor shall be responsible for excavating and backfilling the trench and installing any necessary sleeves under sidewalks or driveways. The Contractor is responsible for installing the required conduit infrastructure between the service point and the UPS/meter pedestal according to the utility electrical service provider's requirements. The electrical utility will install the electrical cable in the conduit between these two locations or as provided on the Project Plans.

APPROVED FOR DISTRIBUTION:

07/14/2006

Keith E. Brann, P.E., Town Engineer — Date

Registered Professional Engineer (Civil) Certificate No. 38119 SCOTT A. LESKA Date Signed 7-14-06 ARIZONA, U.S.A.

MARANA

STANDARD DETAIL		DETAIL NO:
GENERAL TRAFFIC SIGNAL NOTES		730–401a
DATE: 9/9/05	REVISED: 07/14/2006	SHEET 2 OF 3

GENERAL TRAFFIC SIGNAL NOTES:

1. All equipment/materials and construction shall comply with the requirements contained in the Town of Marana Standard Details (latest edition), the Project's Supplemental Specifications, the Special Provisions, the Project Plans, the 2003 Pima County/City of Tucson "Standard Specifications for Public Improvements", and the Pima County/City of Tucson "Standard Details for Public Improvements".

2. All pedestrian push button assemblies shall comply with current ADA requirements. The pedestrian pushbutton signs shall be the R10–3e as identified in the Manual on Uniform Traffic Control Devices (MUTCD), latest edition.

3. Internally Illuminated Street Name Signs (IISNS) shall be installed such that the sign is mounted directly to the vertical shaft of the pole, located above the signal mast arm and positioned such that the sign is side mounted on the street side of the pole. The Contractor shall submit a sign detail and mounting detail to the Town for review a minimum of three (3) weeks prior to the estimated installation date for Town's approval.

4. The exact location of each new pole foundation, pull box, controller cabinet foundation, and UPS/electric service pedestal foundation shall be approved by the Town Engineer or His/Her Designee prior to final placement, installation, and/or construction.

5. The top of the pole foundation shall be level and six (6) inches above the finished grade. Provide extended bolts for all pole foundations to allow for future elevation adjustments.

6. All Conduit, Cable, Wire, Poles, Posts, Signs, Equipment, Materials and Appurtenances supplied for the Project shall be furnished and purchased new and unused. The new equipment, materials and appurtenances shall be ordered and delivered for this specific Project only. The Contractor shall provide a submittal list of all proposed materials along with the material specifications to the Town for all materials to be incorporated in the Project to the Town Engineer for review and approval prior to construction. The Town Engineer shall inspect and approve the said requested equipment, material and/or appurtenances prior to use and/or installation. The said material in no way shall be used without written consent from the Town Engineer. The Town reserves the right to refuse to allow the installation of any and all equipment the Contractor submits for approval if it chooses without cause, justification and/or recourse. If Contractor installs the materials without prior written consent from the Engineer, the Contractor shall remove and replace the equipment with acceptable new equipment and/or material(s) at his/her sole expense.

7. All new conduit as shown on the Project Plans shall be installed a minimum of 30 inches below finished grade. Conduit installed under roadways, driveways, or any open areas subject to vehicles, or conduits with conductors that have voltages over 250 volts, shall be installed a minimum of 36 inches below finished grade unless stated otherwise on the Project Plans or in the Special Provisions.

(Cont.)

8. Any conduit installed shallower than 30 inches below finished grade shall be encased in concrete per Pima County/City of Tucson "Standard Specifications for Public Improvements", 2003 edition, Subsection 732–3.01 (G).

9. Prior to the Town's acceptance and prior to pulling conductor, cable, wire and/or fiber optic cables, all conduit(s) (new and existing) to be incorporated into the new system as provided for on the Project Plans shall be cleaned and blown out with compressed air in the presence of the Town's inspector. A properly sized conduit piston or mandrel shall be pulled through the entire conduit system in the presence of the Town's inspector prior to conductor, cable or wire installation to ensure that no obstructions or debris exist in the conduit. No water or moisture shall remain in conduit(s) prior to installing conductors.

10. Conduit installed under existing paved driveway(s), sidewalk(s), and pavement that are not scheduled to be reconstructed as part of the Project shall be installed by means of boring or directional drilling.

11. Pull boxes shall not be installed within concrete curb access ramp(s) or sidewalk(s). Any pull boxes installed behind curb(s) shall be installed between the curb and the proposed/future sidewalk or beyond the proposed/future sidewalk in accordance with the Project Plans and Special Provisions. An exception to this requirement is permitted for pull boxes installed within a median or as otherwise called for on the Project Plans, Special Provisions, or by the Town Engineer or His/Her Designee.

12. Any pull boxes installed along an uncurbed roadway shall be installed adjacent to, but not within, the shoulder.

13. A ¾" diameter x 10' long ground rod (copper) shall be installed in all #7 pull boxes used for the High Voltage conductors. A ¾" diameter x 10' long ground rod (copper) shall be installed in the home run pull box (No. 7 with extension) adjacent to the controller cabinet. Two ground rod clamps shall be furnished for grounding the ground wire on each ground rod.

14. Two (2) ¾" diameter x 10' long ground rods (copper) shall be installed in the controller cabinet foundation a minimum of 8 feet apart. See Town of Marana's Controller Cabinet Foundation Standard Detail (730–210) for details.

15. The high voltage cables and conductors shall be separated from the low voltage cables and conductors, and shall be installed/constructed in separate conduit.

16. IMSA 19–1 20–conductor solid wire cable shall be installed continuous and unspliced from the controller cabinet through the No. 7 pull box on each corner to the poles traffic signal head wire splicing compartment.

APPROVED FOR DISTRIBUTION:

07/14/2006

Keith E. Brann, P.E., Town Engineer — Date

Registered Professional Engineer (Civil) Certificate No. 38119 SCOTT A. LESKA Date Signed 7/14/06 ARIZONA, U.S.A.

MARANA

STANDARD DETAIL		DETAIL NO:
GENERAL TRAFFIC SIGNAL NOTES		730–401a
DATE: 9/9/05	REVISED: 07/14/2006	SHEET 1 OF 3

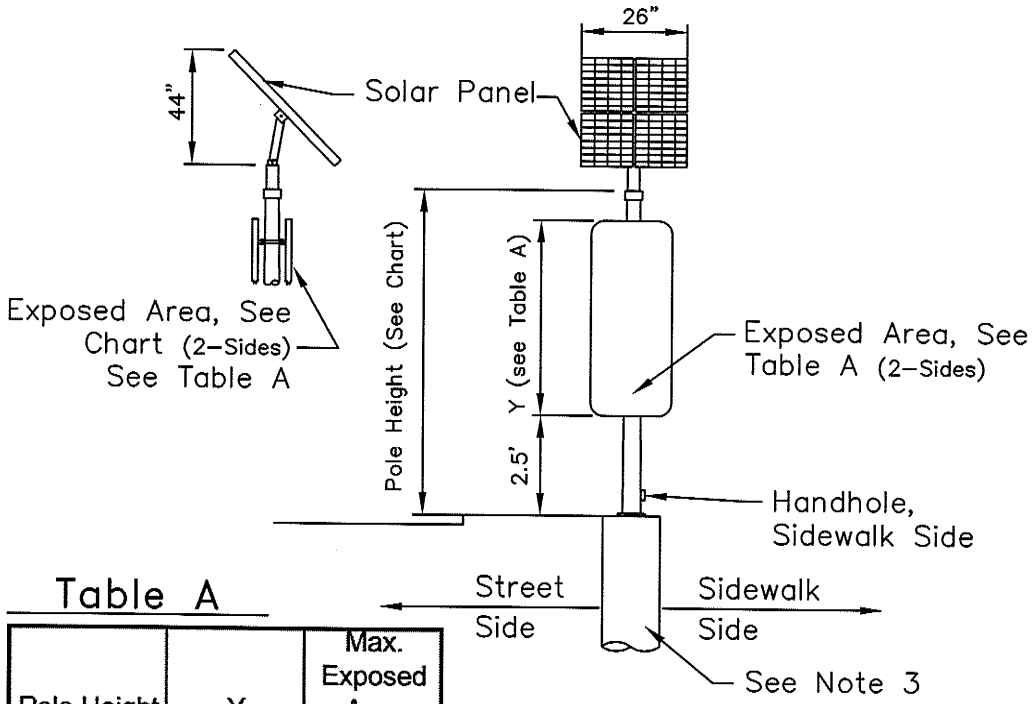

Type A Pole With Solar Panel

Not To Scale

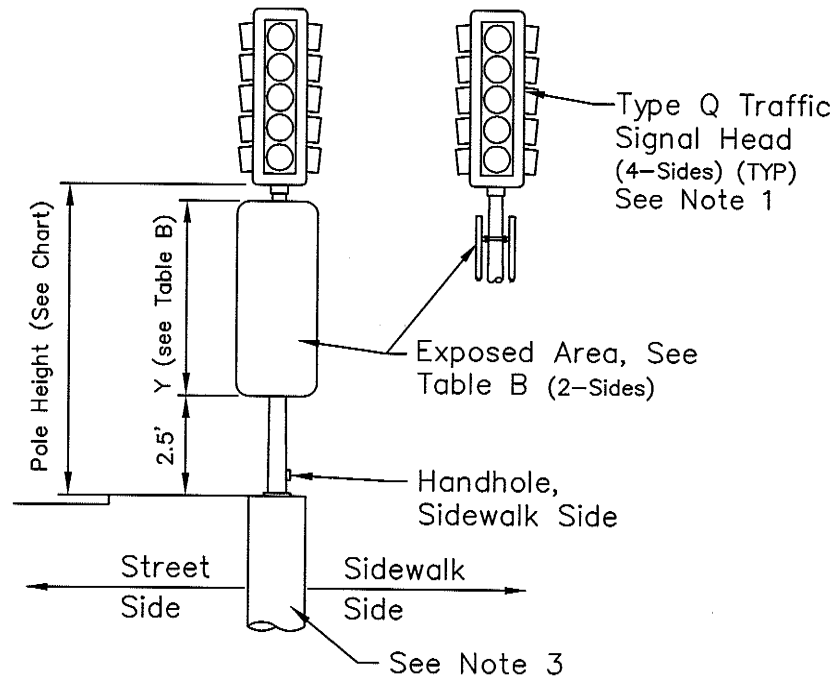

Type A Pole With Signal Head

Not To Scale

Table A

Pole Height	Y	Max. Exposed Area
7'	4.5'	45 sq. ft.
10'	7.5'	40 sq. ft.
12'	9.5'	35 sq. ft.
15'	12.5'	30 sq. ft.

Table B

Pole Height	Y	Max. Exposed Area
7'	4.5'	30 sq. ft.
10'	7.5'	25 sq. ft.
12'	9.5'	20 sq. ft.
15'	12.5'	15 sq. ft.

NOTES:

1. A maximum of one (1) four-sided signal head (4-Q) shall be installed on the pole as shown.
2. The Designer shall provide additional structural analysis for any deviations from the dimensions shown which will result in increased structural loading.
3. Foundation shall be a minimum of 6' in depth as measured from the top of finished grade and a minimum of 3' in diameter. All other foundation requirements shall adhere to Pima County/City of Tucson's Standard Details for Public Improvements, 2003 Ed.
4. The total exposed area shall be measured by the largest exposed area of a single installed item. Items may include signs, traffic signal heads, controller cabinets, etc.

APPROVED FOR DISTRIBUTION:

4/14/2006

Keith E. Brann, P.E., Town Engineer — Date

Registered Professional Engineer (Civil) — Certificate No. 35119 — Scott A. Leska — Date Signed 04-14-06 — Arizona, U.S.A.

TOWN OF MARANA ARIZONA

STANDARD DETAIL		DETAIL NO:
POLE LOADING DETAIL TYPE A POLE		730-408
DATE: 4/14/06	REVISED:	SHEET 1 OF 2

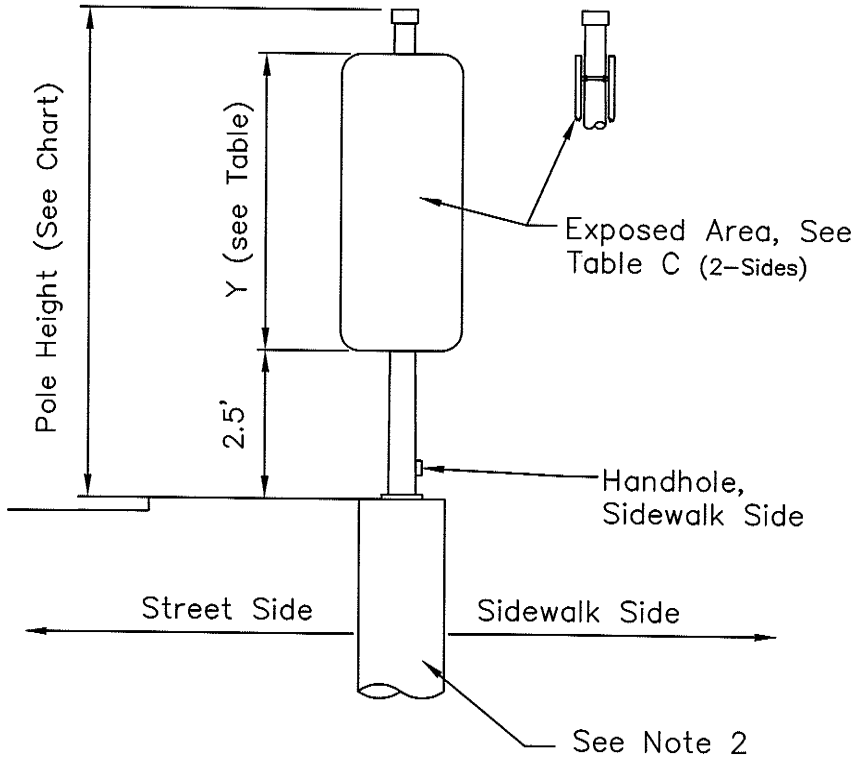

Type A Pole

Not To Scale

NOTES:

1. The Designer shall provide additional structural analysis for any deviations from the dimensions shown which will result in increased structural loading.
2. Foundation shall have a minimum depth as shown in Table C, and shall be measured from the top of finished grade. The foundation shall have a minimum diameter of 3'. All other foundation requirements shall adhere to Pima County/City of Tucson's Standard Details for Public Improvements, 2003 Ed.
3. The total exposed area shall be measured by the largest exposed area of a single installed item. Items may include signs, traffic signal heads, controller cabinets, etc.

Table C

Pole Height	Y	6ft Drilled Shaft Max. Exposed Area	3ft Drilled Shaft Max. Exposed Area
7'	4.5'	60 sq. ft.	35 sq. ft.
10'	7.5'	55 sq. ft.	30 sq. ft.
12'	9.5'	50 sq. ft.	25 sq. ft.
15'	12.5'	45 sq. ft.	20 sq. ft.

APPROVED FOR DISTRIBUTION:

4/14/2006

Keith E. Brann, P.E., Town Engineer — Date

Registered Professional Engineer (Civil) CERTIFICATE NO. 38119 SCOTT A. LESKA ARIZONA, U.S.A. Signed 04-14-06

TOWN OF MARANA ARIZONA 1977

STANDARD DETAIL		DETAIL NO:
POLE LOADING DETAIL TYPE A POLE		730-408
DATE: 4/14/06	REVISED:	SHEET 2 OF 2

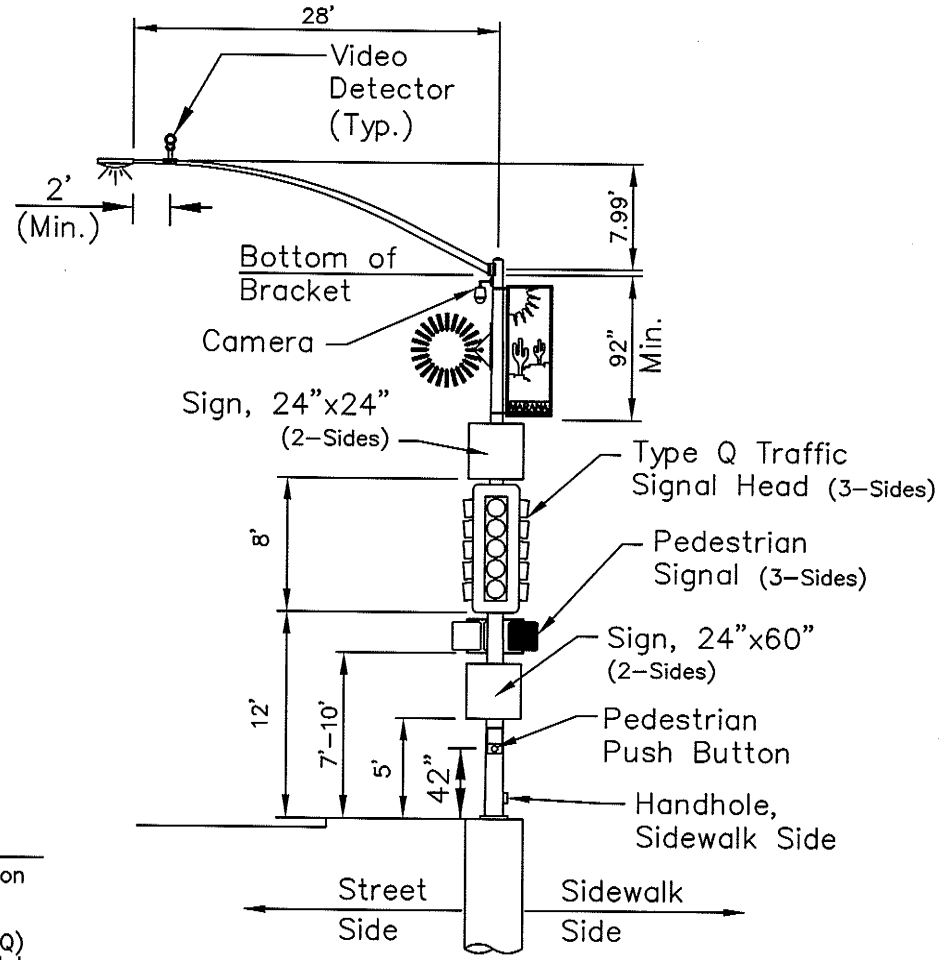

Type Q Pole
30' Mast Arm
Not To Scale

NOTES:

1. A maximum 20' length mast arm shall be installed on the Type G pole standard.
2. A maximum of one (1) three-sided signal head (3-Q) and one (1) three-sided pedestrian signal head shall be installed on the pole as shown.
3. Mast arm dimensions are measured from bracket connection point of upright to tip of mast arm.
4. The Designer shall provide additional structural analysis for any deviations from the dimensions shown which will result in increased structural loading.

APPROVED FOR DISTRIBUTION:

4/14/2006

Keith E. Brann, P.E., Town Engineer — Date

Registered Professional Engineer (Civil) Certificate No. 38119 Scott Leska Date Signed 04-14-06 Arizona, U.S.A.

TOWN OF MARANA ARIZONA 1977

STANDARD DETAIL		DETAIL NO:
POLE AND MAST ARM LOADING DETAIL TYPE G POLE WITH 20 FT. MAST ARM		730-409
DATE: 4/14/06	REVISED:	SHEET 1 OF 1

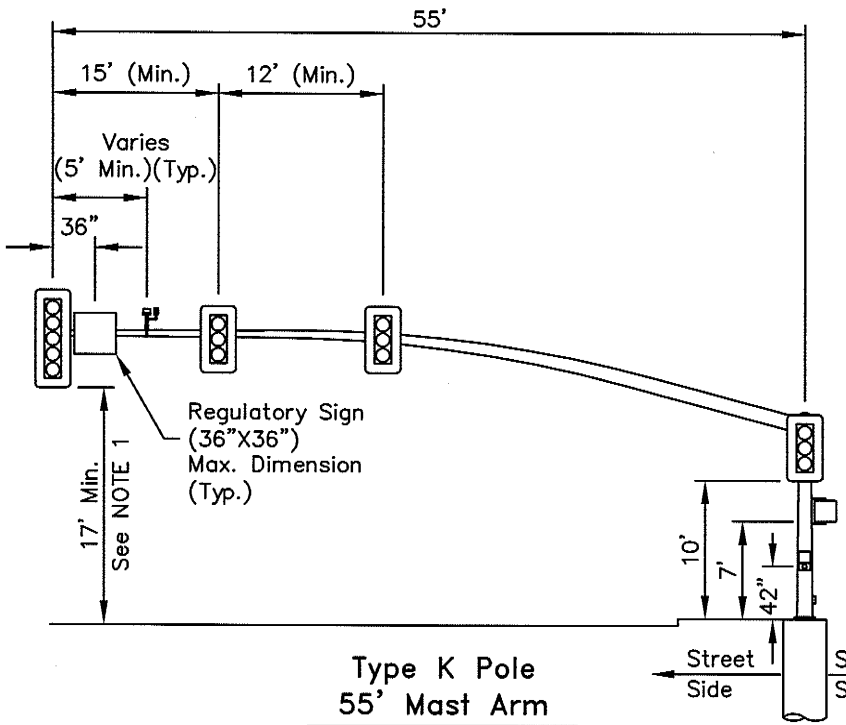

Type K Pole
55' Mast Arm
Not To Scale

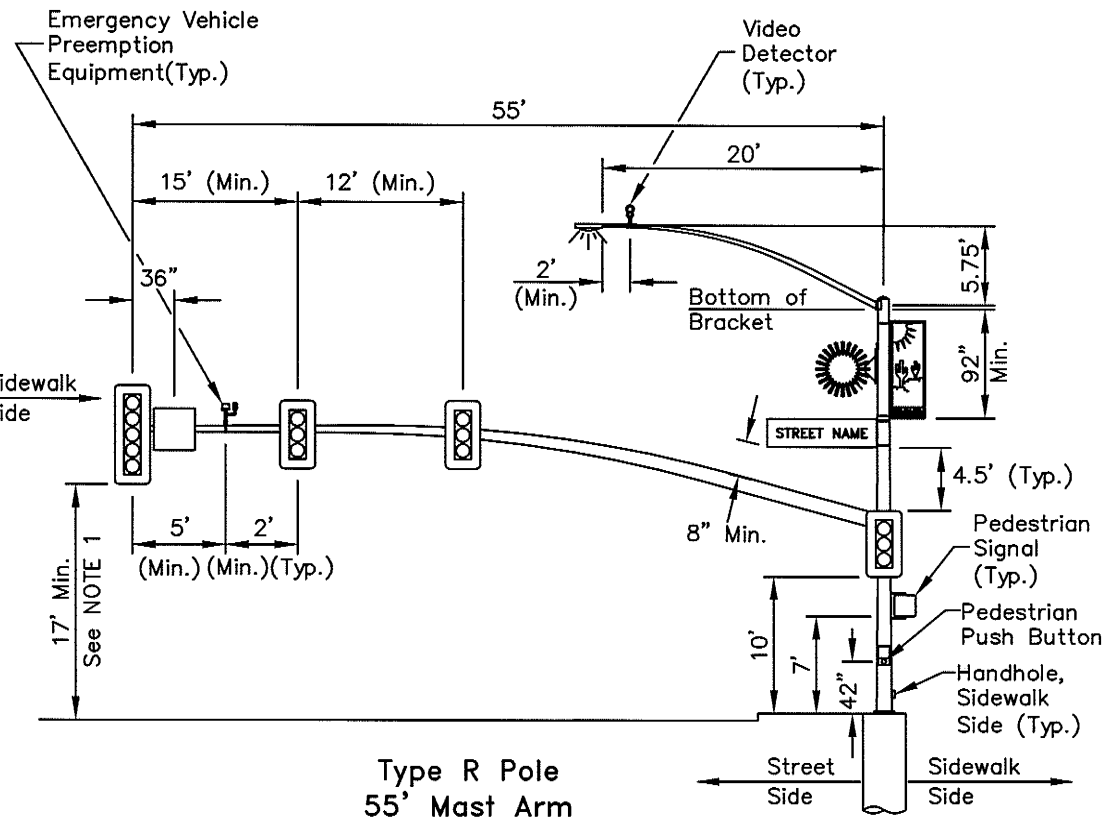

Type R Pole
55' Mast Arm
Not To Scale

NOTES:

1. There shall be a minimum of 17' clearance between the surface of the pavement and the bottom of each signal head back plate mounted on the mast arm.
2. A maximum of 3 signal heads (1–Q, 2–F) may be installed on the 55' mast arm as shown.
3. Mast arm dimension measured from center of upright to tip of mast arm.
4. The Designer shall provide additional structural analysis for any deviations from the dimensions shown which will result in increased structural loading.

APPROVED FOR DISTRIBUTION:

9/9/2005

Keith E. Brann, P.E., Date
Acting Town Engineer

Registered Professional Engineer (Civil) Cert. No. 38119 SCOTT A. LESKA Date Signed 9/9/05 ARIZONA, U.S.A.

TOWN OF MARANA ARIZONA

STANDARD DETAIL		DETAIL NO:
MAST ARM LOADING DETAIL TYPE K AND R POLE WITH 55 FT. MAST ARM		730–410
DATE: 9/9/05	REVISED:	SHEET 1 OF 1

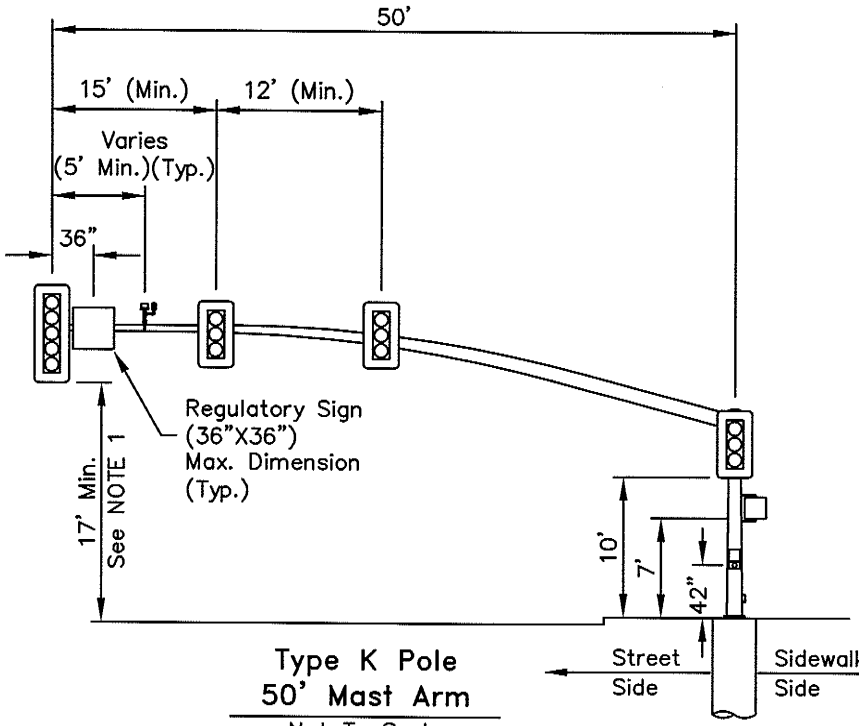

Type K Pole
50' Mast Arm
Not To Scale

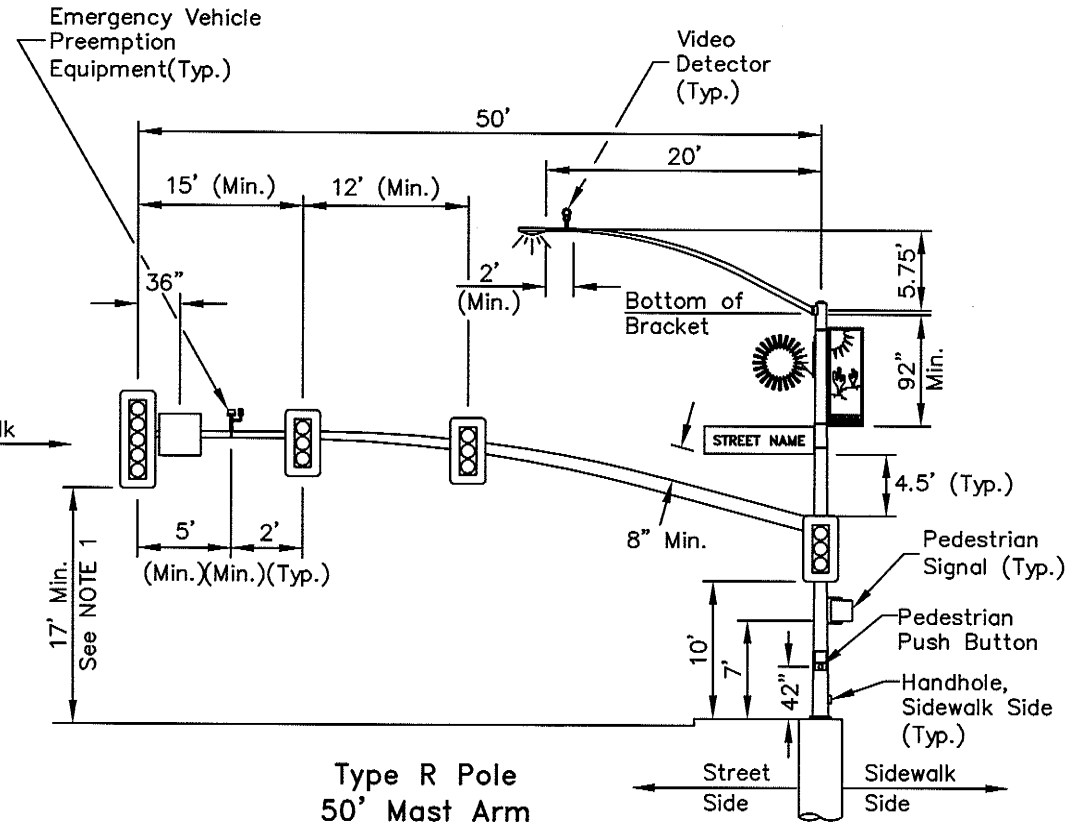

Type R Pole
50' Mast Arm
Not To Scale

NOTES:

1. There shall be a minimum of 17' clearance between the surface of the pavement and the bottom of each signal head back plate mounted on the mast arm.
2. A maximum of 3 signal heads (1–Q, 2–F) may be installed on the 50' mast arm as shown.
3. Mast arm dimension measured from center of upright to tip of mast arm.
4. The Designer shall provide additional structural analysis for any deviations from the dimensions shown which will result in increased structural loading.

APPROVED FOR DISTRIBUTION:

9/9/2005

Keith E. Brann, P.E., Acting Town Engineer — Date

Registered Professional Engineer (Civil) Certificate No. 38119 SCOTT A. LESKA Date Signed 9/9/05 ARIZONA, U.S.A.

TOWN OF MARANA ARIZONA 1977

STANDARD DETAIL		DETAIL NO:
MAST ARM LOADING DETAIL TYPE K AND R POLE WITH 50 FT. MAST ARM		730–411
DATE: 9/9/05	REVISED:	SHEET 1 OF 1

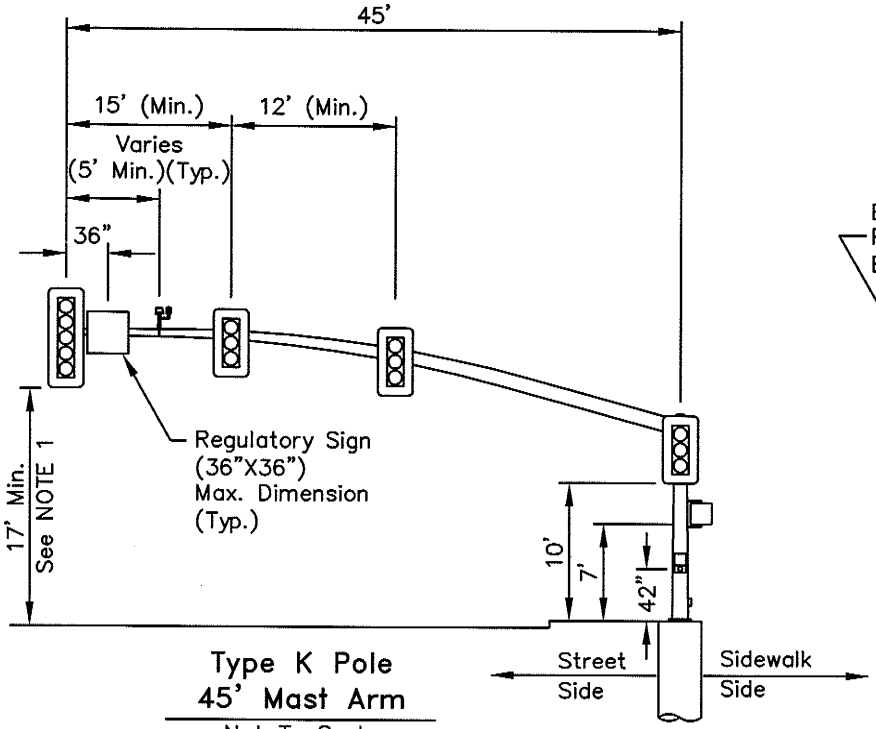

Type K Pole
45' Mast Arm
Not To Scale

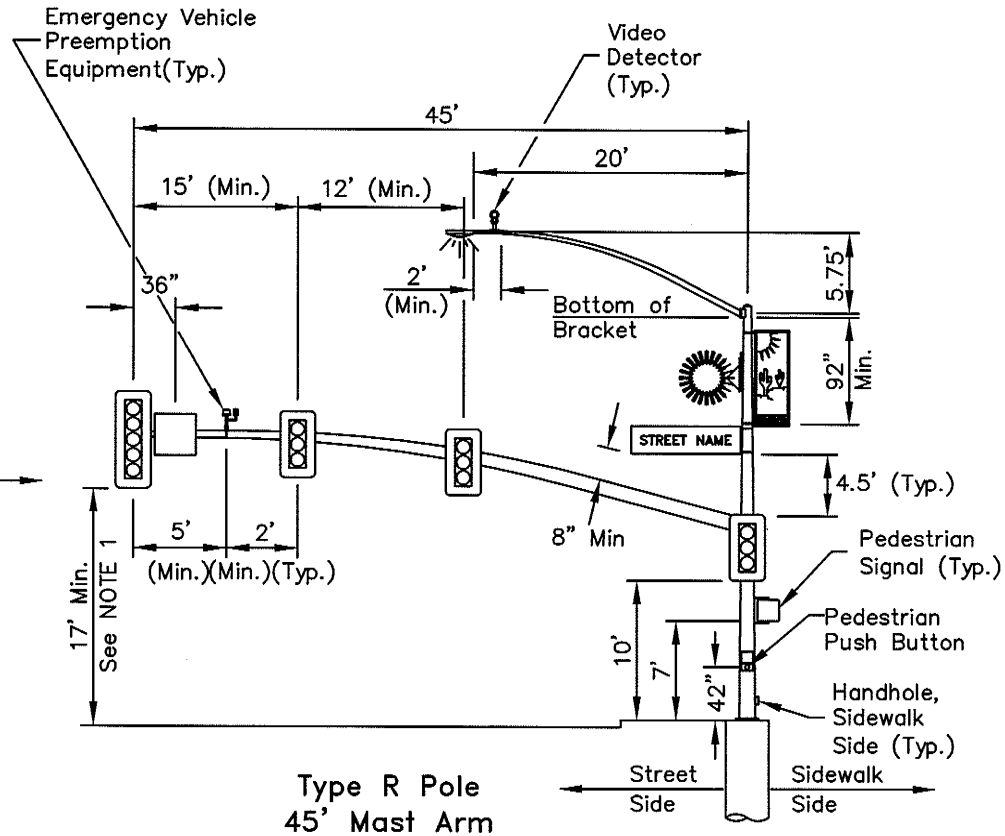

Type R Pole
45' Mast Arm
Not To Scale

NOTES:

1. There shall be a minimum of 17' clearance between the surface of the pavement and the bottom of each signal head back plate mounted on the mast arm.
2. A maximum of 3 signal heads (1–Q, 2–F) may be installed on the 45' mast arm as shown.
3. Mast arm dimension measured from center of upright to tip of mast arm.
4. The Designer shall provide additional structural analysis for any deviations from the dimensions shown which will result in increased structural loading.

APPROVED FOR DISTRIBUTION:

9/9/2005

Keith E. Brann, P.E., Acting Town Engineer — Date

Registered Professional Engineer (Civil) Certificate No. 38119 SCOTT A. LESKA Date Signed 9/9/05 ARIZONA, U.S.A.

TOWN OF MARANA ARIZONA 1977

STANDARD DETAIL		DETAIL NO:
MAST ARM LOADING DETAIL TYPE K AND R POLE WITH 45 FT. MAST ARM		730–412
DATE: 9/9/05	REVISED:	SHEET 1 OF 1

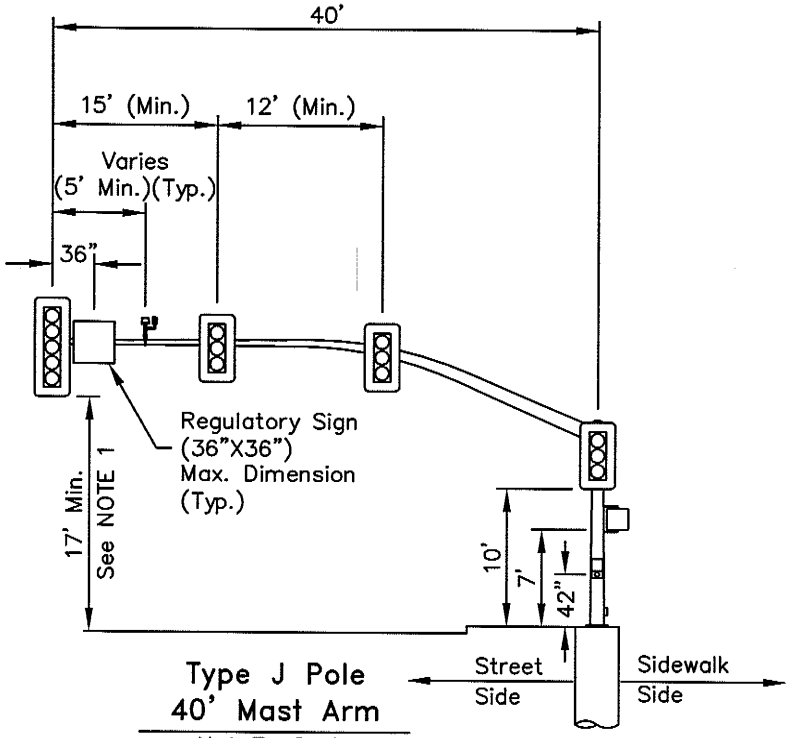

Type J Pole
40' Mast Arm
Not To Scale

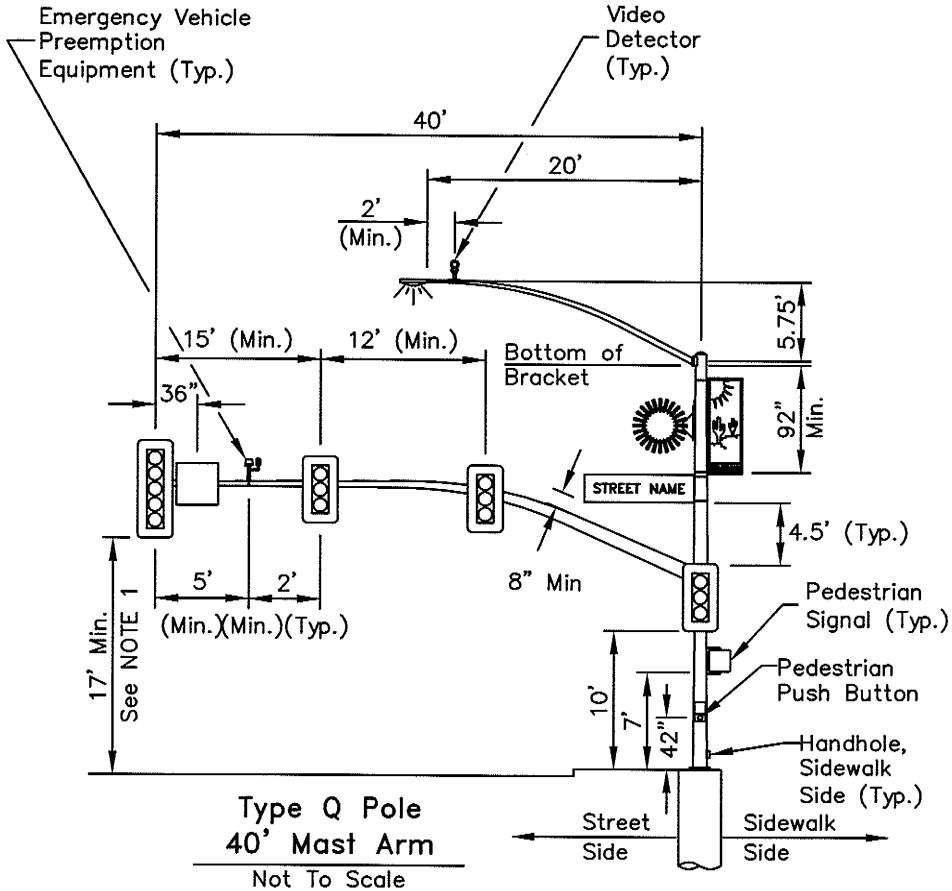

Type Q Pole
40' Mast Arm
Not To Scale

NOTES:

1. There shall be a minimum of 17' clearance between the surface of the pavement and the bottom of each signal head back plate mounted on the mast arm.
2. A maximum of 3 signal heads (1–Q, 2–F) may be installed on the 40' mast arm as shown.
3. Mast arm dimension measured from center of upright to tip of mast arm.
4. The Designer shall provide additional structural analysis for any deviations from the dimensions shown which will result in increased structural loading.

APPROVED FOR DISTRIBUTION:

9/9/2005

Keith E. Brann, P.E., Acting Town Engineer — Date

Registered Professional Engineer (Civil) Cert. No. 38119 SCOTT A. LESKA Date Signed 9/9/5 ARIZONA, U.S.A.

TOWN OF MARANA ARIZONA 1977

STANDARD DETAIL		DETAIL NO:
MAST ARM LOADING DETAIL TYPE J AND Q POLE WITH 40 FT. MAST ARM		730–413
DATE: 9/9/05	REVISED:	SHEET 1 OF 1

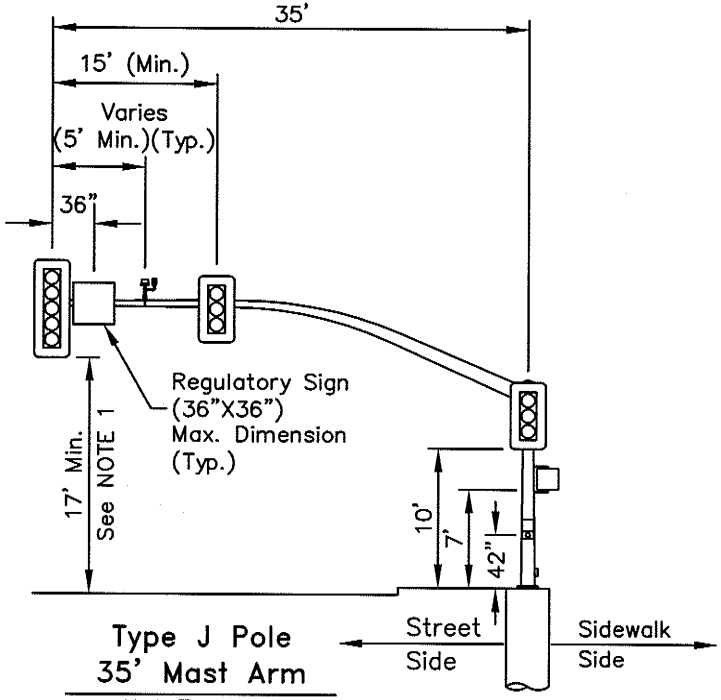

Type J Pole
35' Mast Arm
Not To Scale

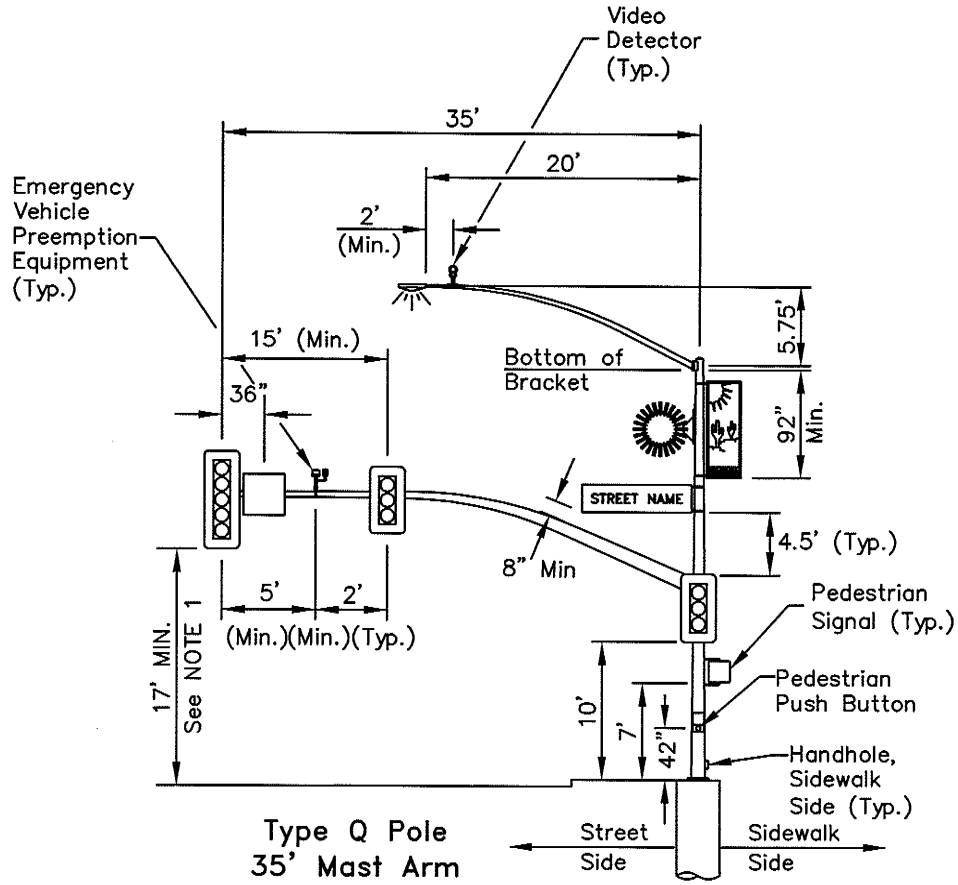

Type Q Pole
35' Mast Arm
Not To Scale

NOTES:

1. There shall be a minimum of 17' clearance between the surface of the pavement and the bottom of each signal head back plate mounted on the mast arm.
2. A maximum of 2 signal heads (1–Q, 1–F) may be installed on the 35' mast arm as shown.
3. Mast arm dimension measured from center of upright to tip of mast arm.
4. The Designer shall provide additional structural analysis for any deviations from the dimensions shown which will result in increased structural loading.

APPROVED FOR DISTRIBUTION:

9/9/2005

Keith E. Brann, P.E., Acting Town Engineer — Date

Registered Professional Engineer (Civil) — Reg. No. 38119 — SCOTT A. LESKA — Date Signed 9/9/05 — ARIZONA, U.S.A.

TOWN OF MARANA ARIZONA 1977

STANDARD DETAIL		DETAIL NO:
MAST ARM LOADING DETAIL TYPE J AND Q POLE WITH 35 FT. MAST ARM		730–414
DATE: 9/9/05	REVISED:	SHEET 1 OF 1

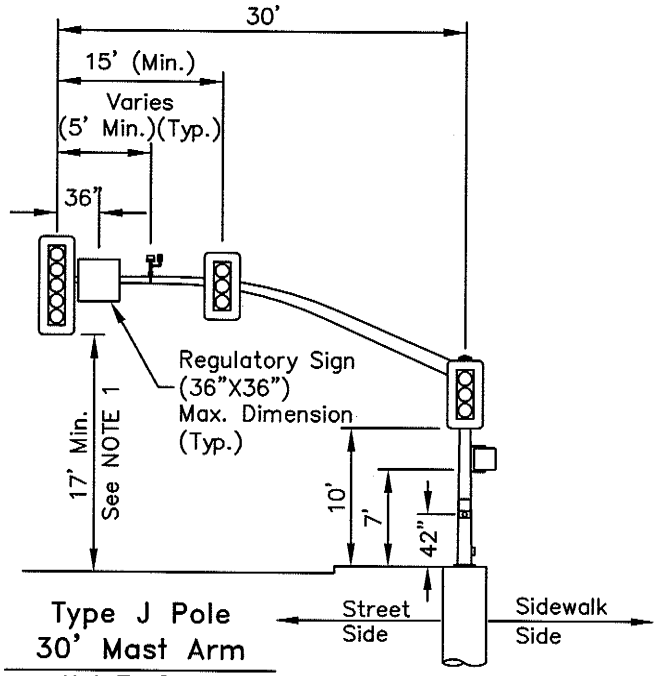

Type J Pole
30' Mast Arm
Not To Scale

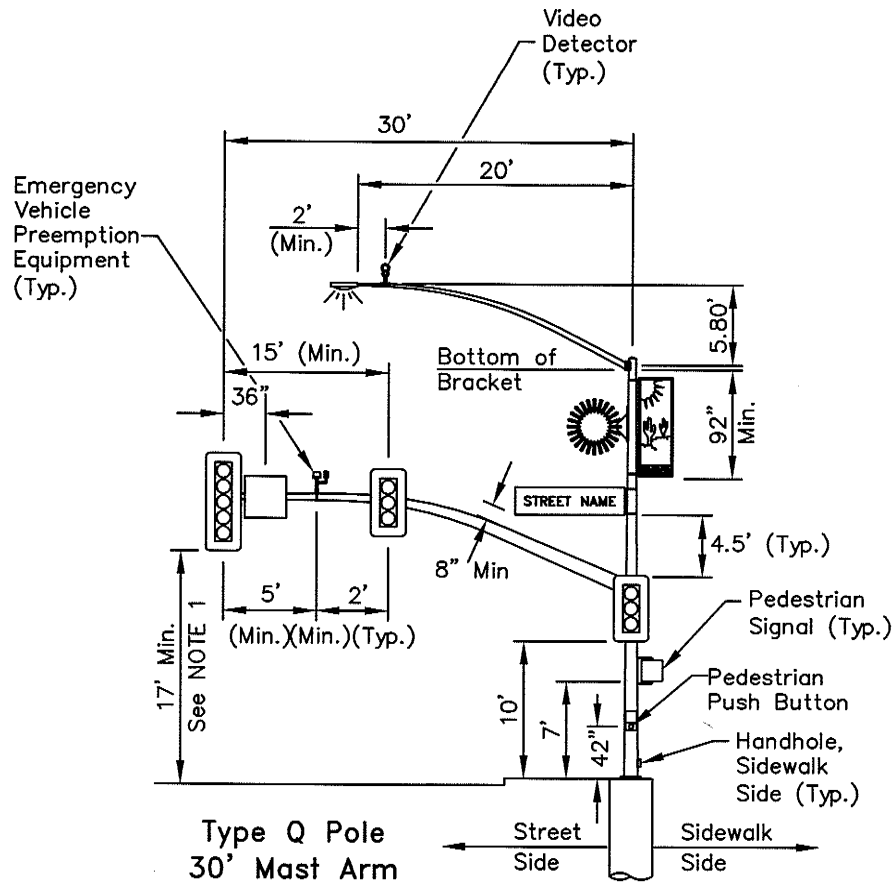

Type Q Pole
30' Mast Arm
Not To Scale

NOTES:

1. There shall be a minimum of 17' clearance between the surface of the pavement and the bottom of each signal head back plate mounted on the mast arm.
2. A maximum of 2 signal heads (1–Q, 1–F) may be installed on the 30' mast arm as shown.
3. Mast arm dimension measured from center of upright to tip of mast arm.
4. The Designer shall provide additional structural analysis for any deviations from the dimensions shown which will result in increased structural loading.

APPROVED FOR DISTRIBUTION:

9/9/2005

Keith E. Brann, P.E., Acting Town Engineer — Date

Registered Professional Engineer (Civil) Certificate No. 38119 SCOTT A. LESKA Date Signed 9/9/05 ARIZONA, U.S.A.

TOWN OF MARANA ARIZONA 1977

STANDARD DETAIL		DETAIL NO:
MAST ARM LOADING DETAIL TYPE J AND Q POLE WITH 30 FT. MAST ARM		730–415
DATE: 9/9/05	REVISED:	SHEET 1 OF 1

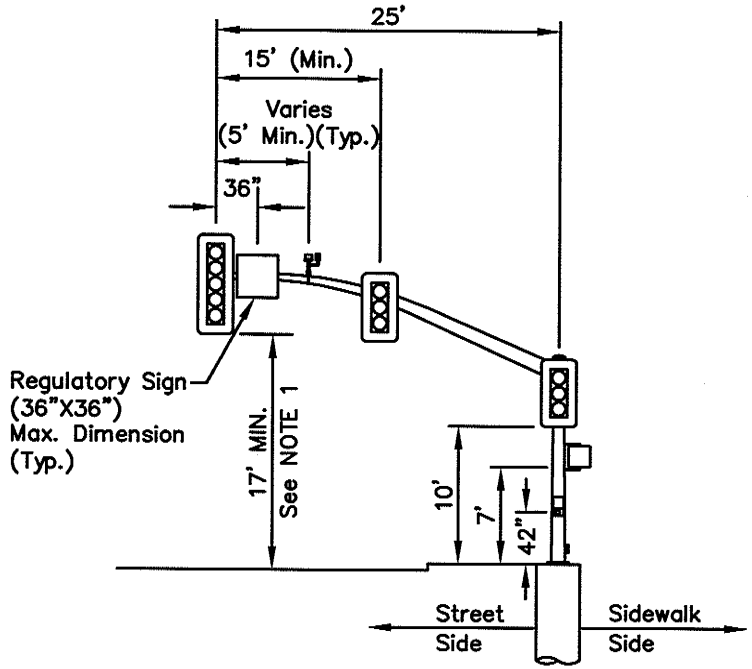

Type J Pole
25' Mast Arm
Not To Scale

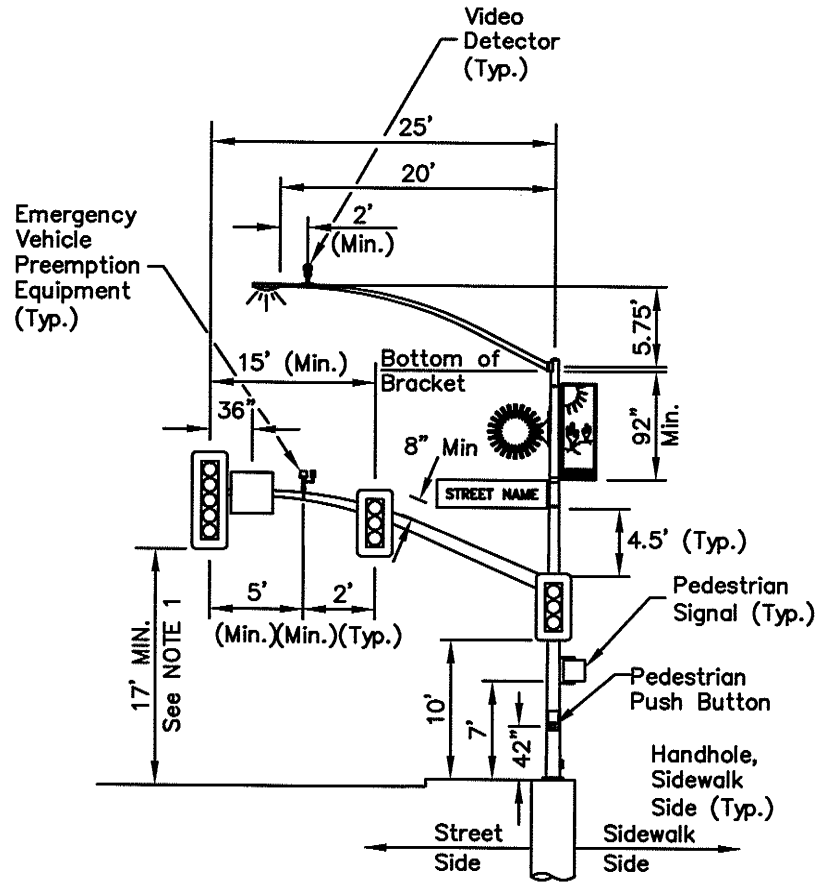

Type Q Pole
25' Mast Arm
Not To Scale

NOTES:

1. There shall be a minimum of 17' clearance between the surface of the pavement and the bottom of each signal head back plate mounted on the mast arm.
2. A maximum of 2 signal heads (1–Q, 1–F) may be installed on the 25' mast arm as shown.
3. Mast arm dimension measured from center of upright to tip of mast arm.
4. The Designer shall provide additional structural analysis for any deviations from the dimensions shown which will result in increased structural loading.

APPROVED FOR DISTRIBUTION:

9/9/2005

Keith E. Brann, P.E., Acting Town Engineer — Date

Registered Professional Engineer (Civil) 38119 SCOTT A. LESKA Date Signed 9/9/05 ARIZONA, U.S.A.

TOWN OF MARANA ARIZONA 1977

STANDARD DETAIL		DETAIL NO:
MAST ARM LOADING DETAIL TYPE J AND Q POLE WITH 25 FT. MAST ARM		730–416
DATE: 9/9/05	REVISED:	SHEET 1 OF 1

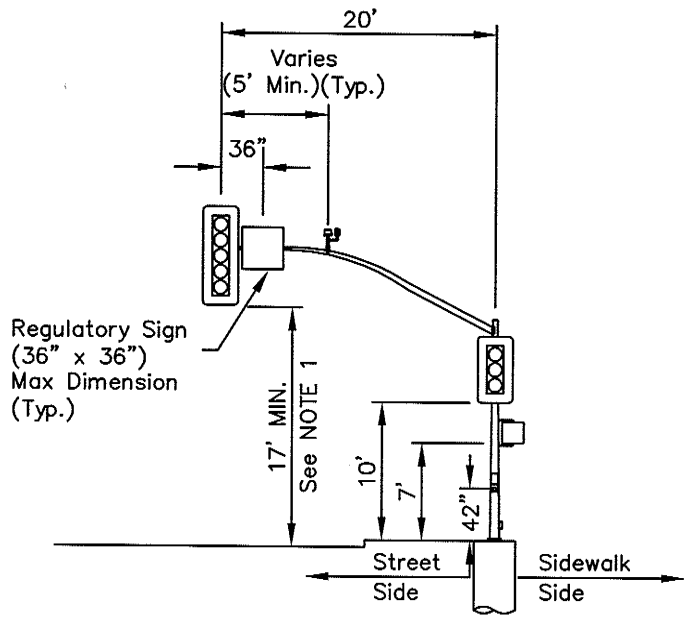

Type E Pole
20' Mast Arm
Not To Scale

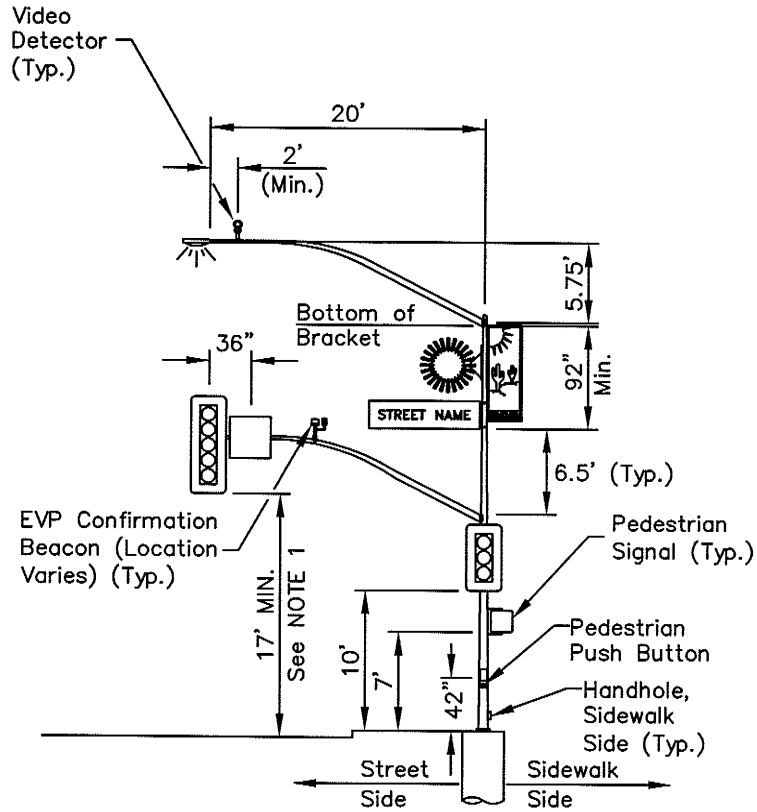

Type F Pole
20' Mast Arm
Not To Scale

NOTES:

1. There shall be a minimum of 17' clearance between the surface of the pavement and the bottom of each signal head back plate mounted on the mast arm.
2. A maximum of 1 signal head (1–Q or 1–F) may be installed on the 20' mast arm as shown.
3. Mast arm dimension measured from center of upright to tip of mast arm.
4. The Designer shall provide additional structural analysis for any deviations from the dimensions shown which will result in increased structural loading.

APPROVED FOR DISTRIBUTION:

9/9/2005

Keith E. Brann, P.E., Acting Town Engineer — Date

Registered Professional Engineer (Civil) Certificate No. 38119 SCOTT A. LESKA Date Signed 9/9/05 ARIZONA, U.S.A.

TOWN OF MARANA ARIZONA 1977

STANDARD DETAIL		DETAIL NO:
MAST ARM LOADING DETAIL TYPE E AND F POLE WITH 20 FT. MAST ARM		730–417
DATE: 9/9/05	REVISED:	SHEET 1 OF 1

NOTES:

1. All cabinets, controllers and poles shall be located outside the roadway clear zone unless directed otherwise by the Town Engineer.
2. Pedestrian Pushbutton Assemblies shall be spaced a minimum of 10 feet apart if more than one assembly is located on each quadrant of the intersection.

NOT TO SCALE

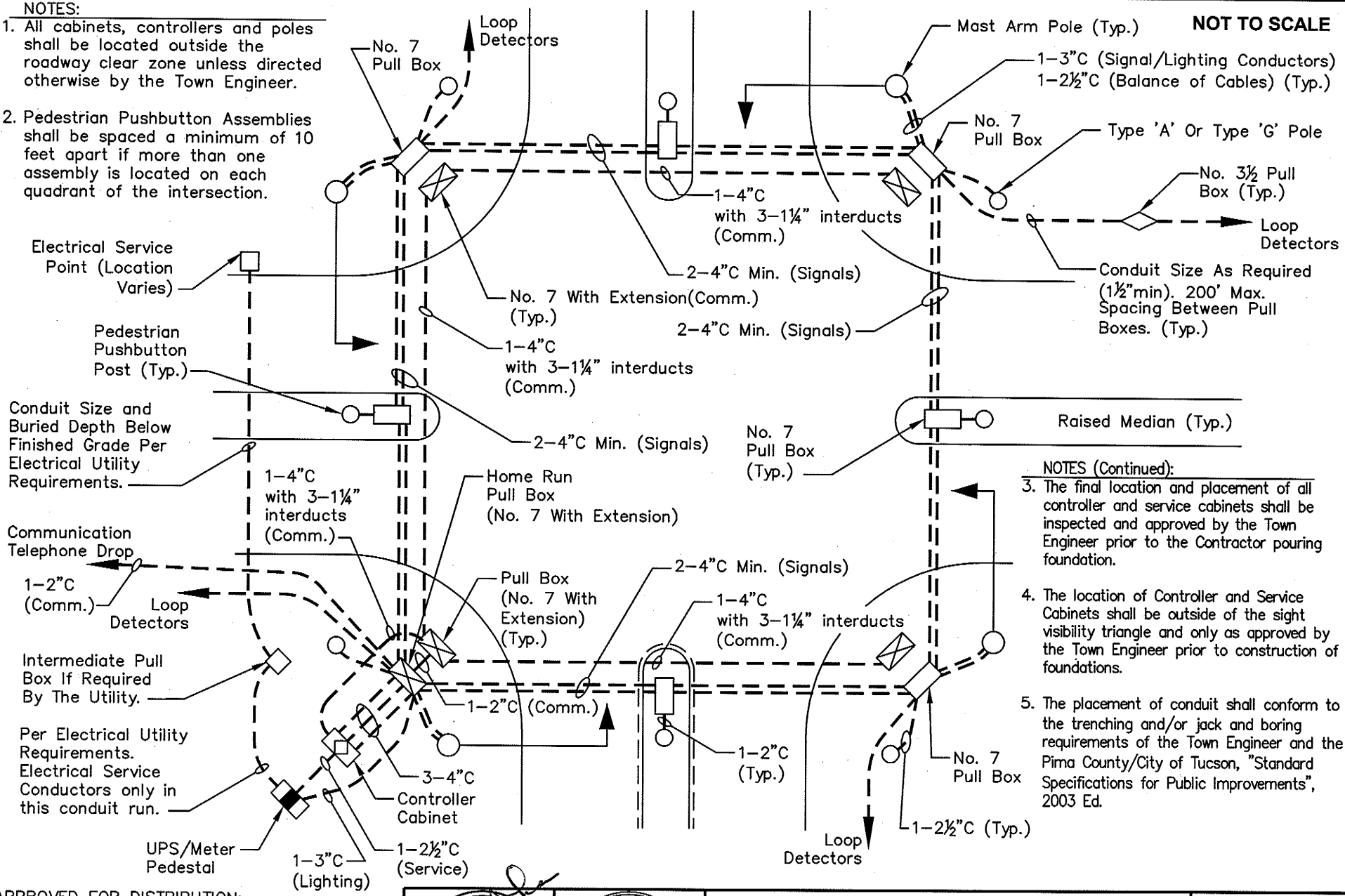

NOTES (Continued):

3. The final location and placement of all controller and service cabinets shall be inspected and approved by the Town Engineer prior to the Contractor pouring foundation.
4. The location of Controller and Service Cabinets shall be outside of the sight visibility triangle and only as approved by the Town Engineer prior to construction of foundations.
5. The placement of conduit shall conform to the trenching and/or jack and boring requirements of the Town Engineer and the Pima County/City of Tucson, "Standard Specifications for Public Improvements", 2003 Ed.

APPROVED FOR DISTRIBUTION:

6/20/2006

Keith E. Brann, P.E.
Town Engineer

Date

Registered Professional Engineer (Civil) CERTIFICATE NO. 38119 SCOTT A. LESKA Date Signed 6/20/06 ARIZONA, U.S.A.

TOWN OF MARANA 1977 ARIZONA

STANDARD DETAIL		DETAIL NO:
TOWN OF MARANA TYPICAL TRAFFIC SIGNAL CONDUIT SCHEMATIC		730–701
DATE: 09/09/05	REVISED: 06/20/06	SHEET 1 OF 1

NOT TO SCALE

NOTE:
See Traffic Signal Wiring Schematic Detail for cable connectivity to poles.

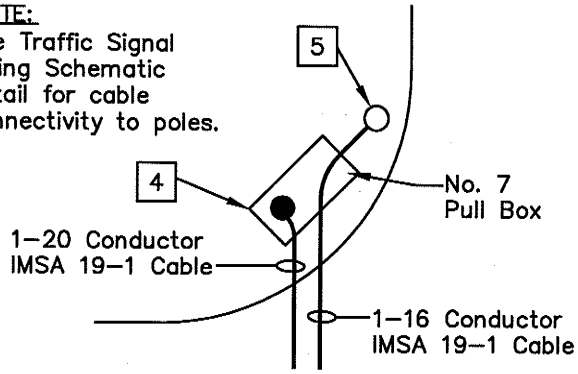

Typical Corner Detail

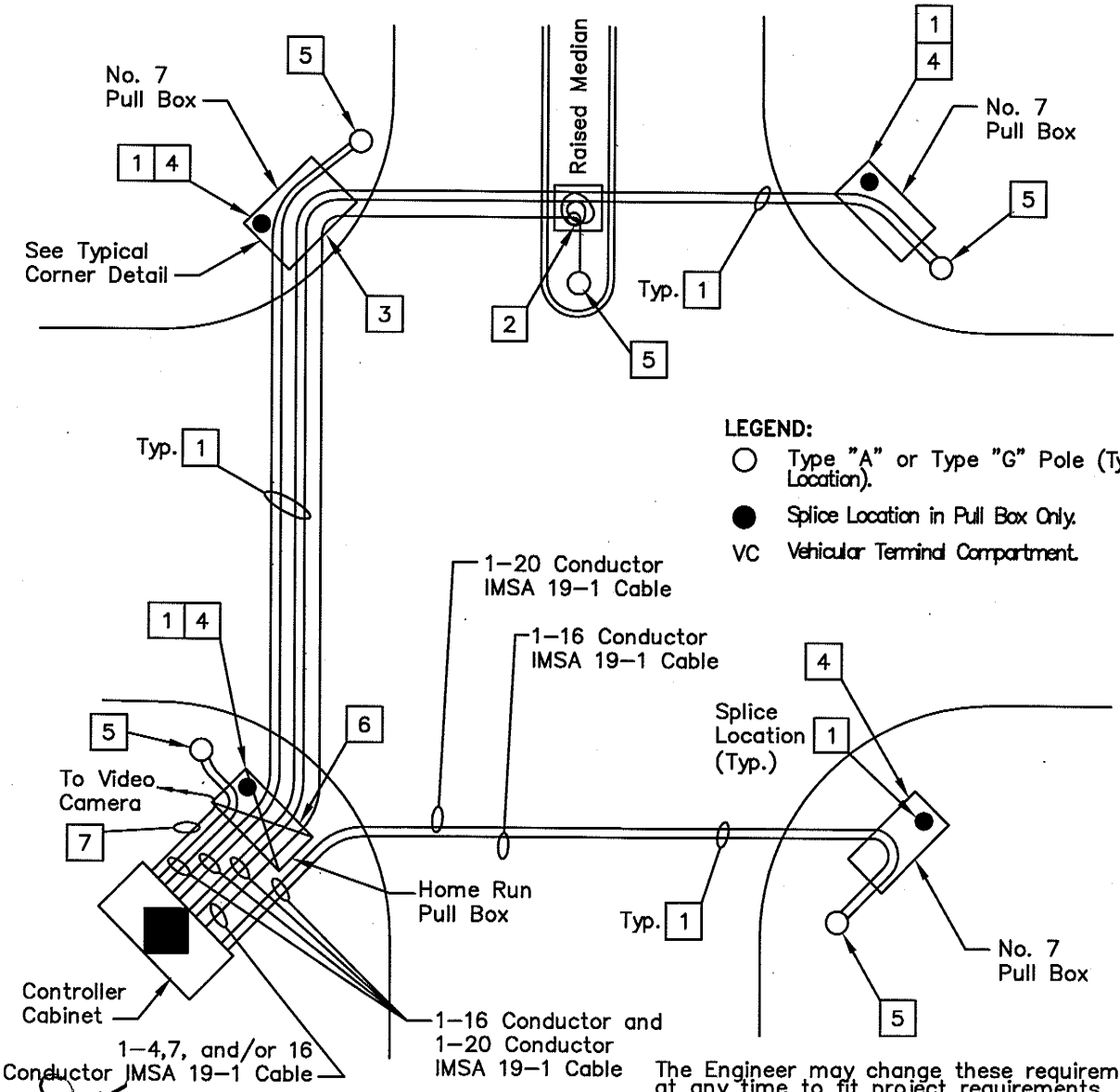

LEGEND:

- ○ Type "A" or Type "G" Pole (Typ. Location).
- ● Splice Location in Pull Box Only.
- VC Vehicular Terminal Compartment.

NOTES:

1. Splice permitted only at designated splice locations as shown on this plan. Each signal cable as shown shall be continuous and unspliced between the controller cabinet and the corner where it is terminated.
2. Provide 1 wrap of slack (5' min.) for each signal cable at intermediate median pull boxes. (Typ.)
3. Provide 2 wraps of slack (8' min.) for each signal cable passing through this pull box. (No splices permitted)
4. Provide 1 wrap of slack (5' min.) for all signal cables terminating in this pull box.
5. Terminate 4, 7, 16, and 20 Conductor IMSA 19–1 cable in VC on the Ped. Post, Type "A", Type "G", Type "Q", or Type "R" pole on corner. Provide 2 wraps of slack (8' min.) in adjacent pull box.
6. Provide 1 wrap of slack (5' min.) for each signal cable passing through the home run pull box (No. 7 with extension).
7. Terminate Video Cable (RG59 Cable, sheilded), Data Cable (18AWG, Sheilded), and Power Cable (3–12AWG CC) at Video Camera on pole designated by Project Plans or Town Engineer.

The Engineer may change these requirements at any time to fit project requirements.

APPROVED FOR DISTRIBUTION:

6/20/2006

Keith E. Brann, P.E., Town Engineer — Date

Registered Professional Engineer (Civil) — Certificate No. 38119 — SCOTT A. LESKA — Date Signed 6/20/06 — ARIZONA, U.S.A.

TOWN OF MARANA ARIZONA 1977

STANDARD DETAIL		DETAIL NO:
TYPICAL TRAFFIC SIGNAL CABLE SCHEMATIC		730–702
DATE: 9/9/05	REVISED: 06/20/06	SHEET 1 OF 1

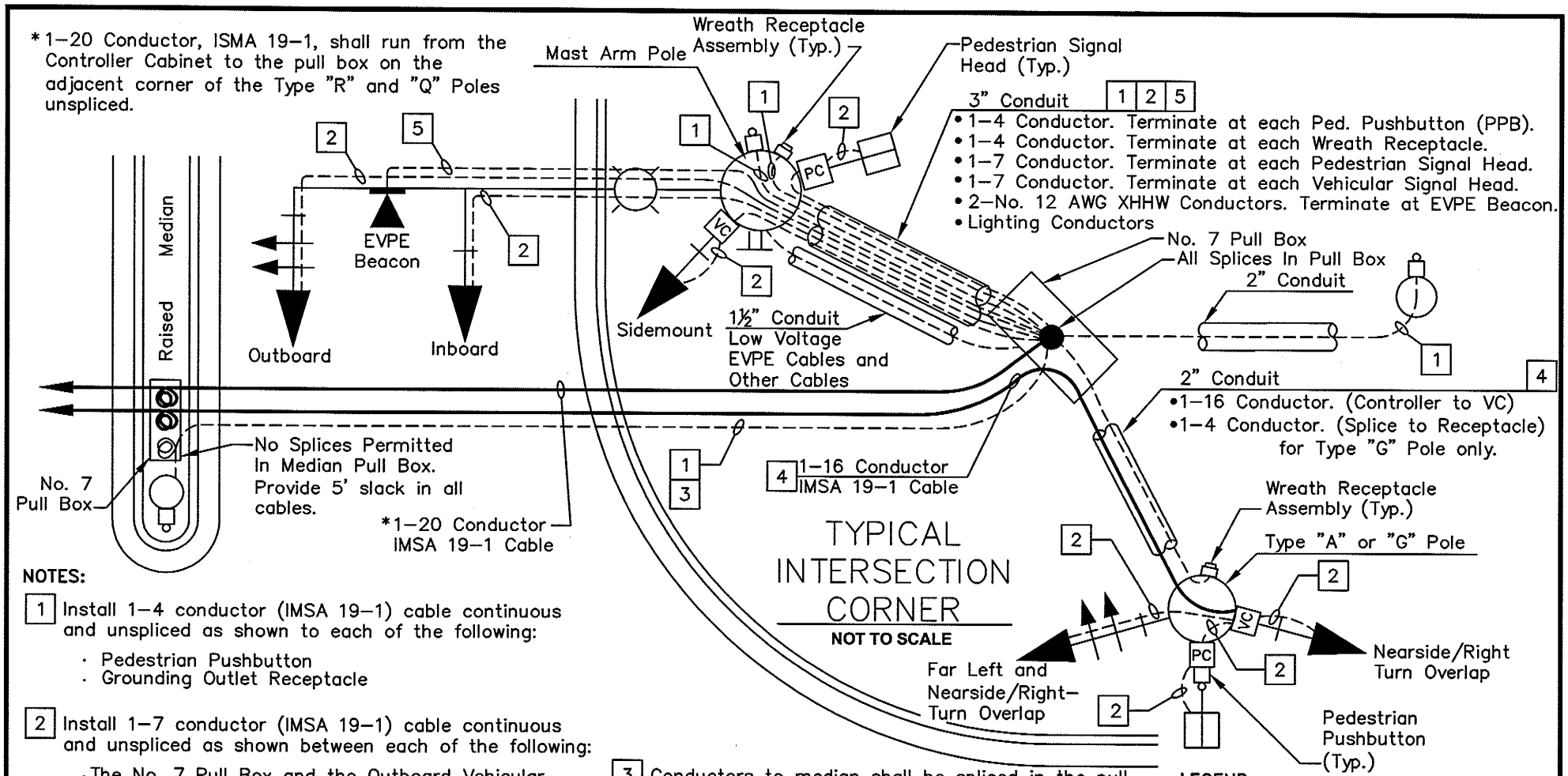

NOTES:

1 Install 1–4 conductor (IMSA 19–1) cable continuous and unspliced as shown to each of the following:

- Pedestrian Pushbutton
- Grounding Outlet Receptacle

2 Install 1–7 conductor (IMSA 19–1) cable continuous and unspliced as shown between each of the following:

- The No. 7 Pull Box and the Outboard Vehicular Signal.
- The No. 7 Pull Box and the Inboard Vehicular Signal.
- The No. 7 Pull Box and the Sidemount Vehicular Signal.
- The VC and the Far Left Mounted Vehicular Signal.
- The VC and the Nearside/Right Turn Overlap Vehicular Signal.
- The No. 7 Pull Box and the Pedestrian Signal Head.
- The VC and the Pedestrian Signal Head/PPB.

3 Conductors to median shall be spliced in the pull box on the adjacent corner in the clockwise direction from the median.

4 Install 1–16 conductor (IMSA 19–1) cable continuous and unspliced as shown between VC (at type "A" or "G" pole) direct to controller.

5 2–No.12 AWG XHHW stranded white and blue conductors for EVPE beacon. Route beacon conductors direct to splice at No. 7 pull box.

LEGEND:

VC Vehicular Terminal Compartment

PC Pedestrian Terminal Compartment

● Splice Location in Pull Box

NOTE: Quantity of cables may vary based on actual field conditions or as directed by the Town Engineer.

APPROVED FOR DISTRIBUTION:

9/9/2005

Keith E. Brann, P.E., Acting Town Engineer — Date

Registered Professional Engineer (Civil) — Certificate No. 58319 — SCOTT A. LESKA — Date Signed 9/9/05 — ARIZONA, U.S.A.

TOWN OF MARANA — ARIZONA — 1977

STANDARD DETAIL		DETAIL NO:
TOWN OF MARANA TRAFFIC SIGNAL WIRING SCHEMATIC		730–703
DATE: 9/9/05	REVISED:	SHEET 1 OF 1

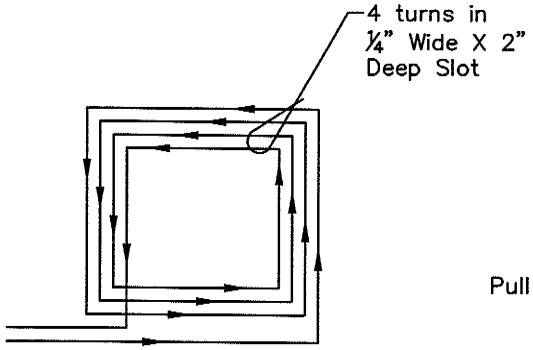

WIRE LAYOUT
Not To Scale

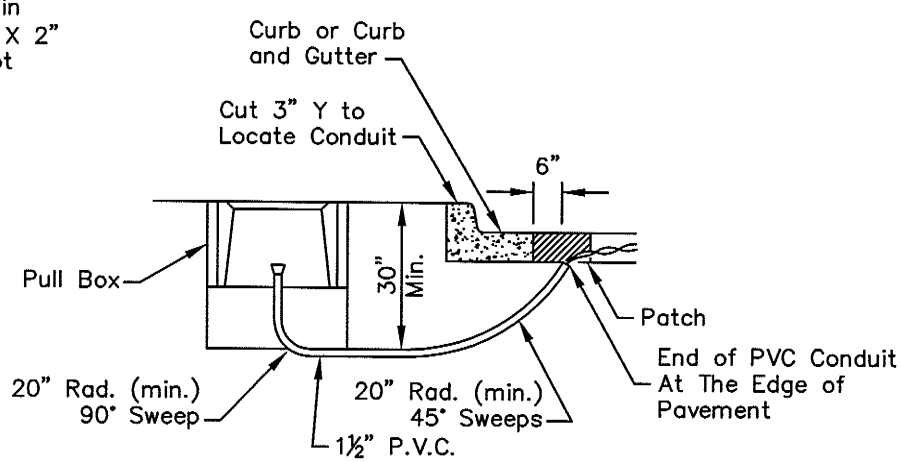

WITH CURB AND GUTTER
Not To Scale

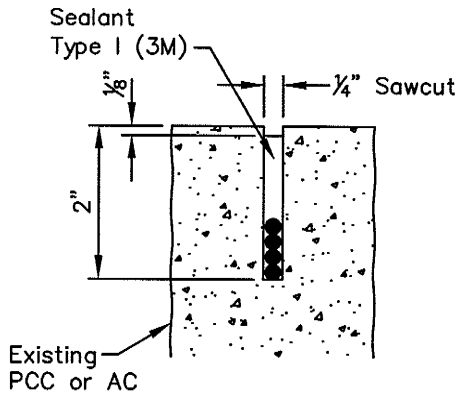

DETAIL 1
Not To Scale

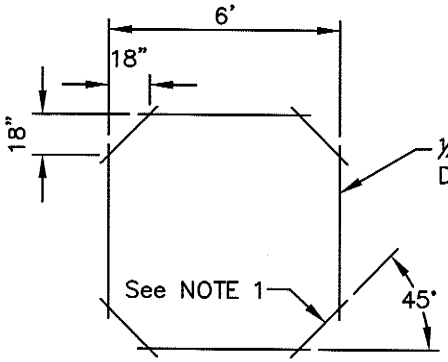

SAWCUT LAYOUT
Not To Scale

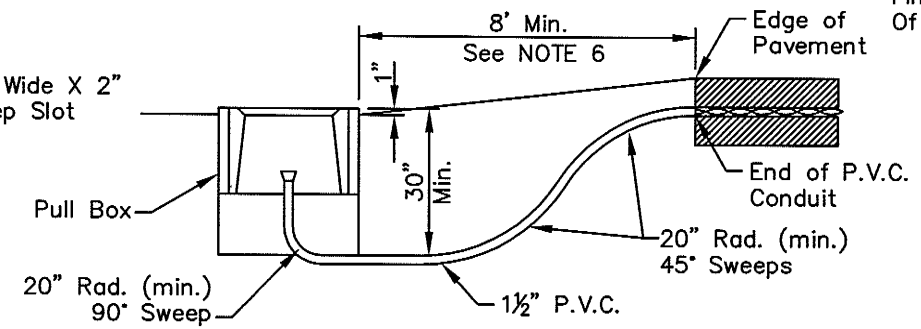

WITHOUT CURB AND GUTTER
Not To Scale

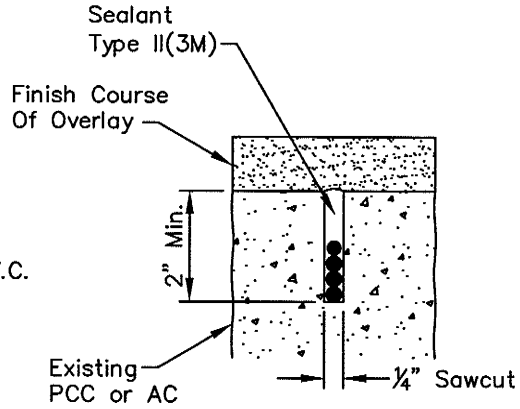

DETAIL 2
Not To Scale

NOTES:

1. Sawcut across corners at a 45° angle to minimize sharp angles in loop run.
2. One loop detector shall be installed per lane and it shall be located in the center of the lane.
3. Loops shall be installed in accordance with the requirements of Detail 1 when there is to be no additional surfacing.
4. Loops shall be installed in accordance with the requirements of Detail 2 when an overlay or top course is installed/constructed.
5. No splices permitted in loop wire.
6. Any pull boxes installed along an uncurbed roadway shall be installed adjacent to, but not within, the shoulder.
7. All pull boxes shall be located on the Project Plans with Station and Offset call-outs.

APPROVED FOR DISTRIBUTION:

9/9/2005

Keith E. Brann, P.E., Date
Acting Town Engineer

Registered Professional Engineer (Civil) Certificate No. 38119 SCOTT A. LESKA Date Signed 9/9/05 ARIZONA, U.S.A.

TOWN OF MARANA ARIZONA

STANDARD DETAIL		DETAIL NO:
6' X 6' LOOP DETECTOR		730-710
DATE: 9/9/05	REVISED:	SHEET 1 OF 1

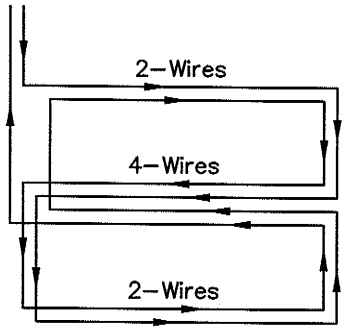

WIRE LAYOUT
Not To Scale

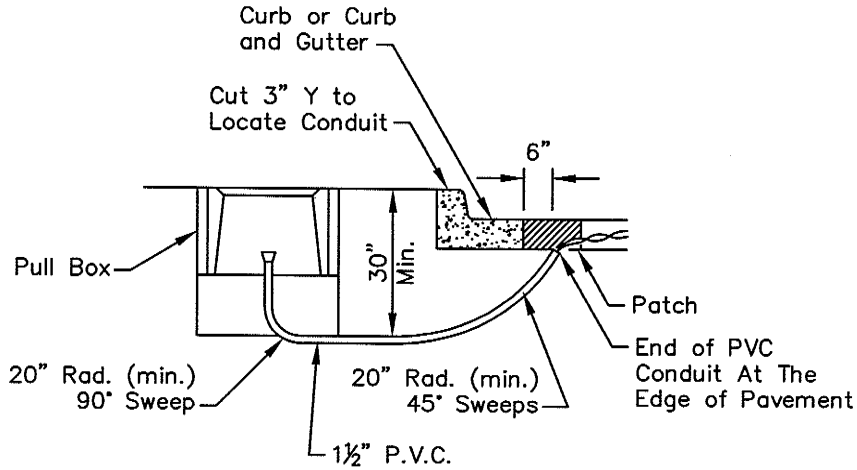

WITH CURB AND GUTTER
Not To Scale

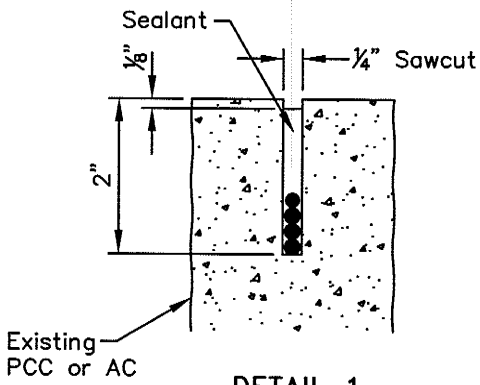

DETAIL 1
Not To Scale

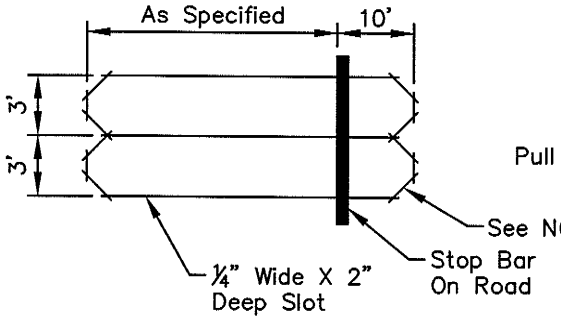

SAWCUT LAYOUT
Not To Scale

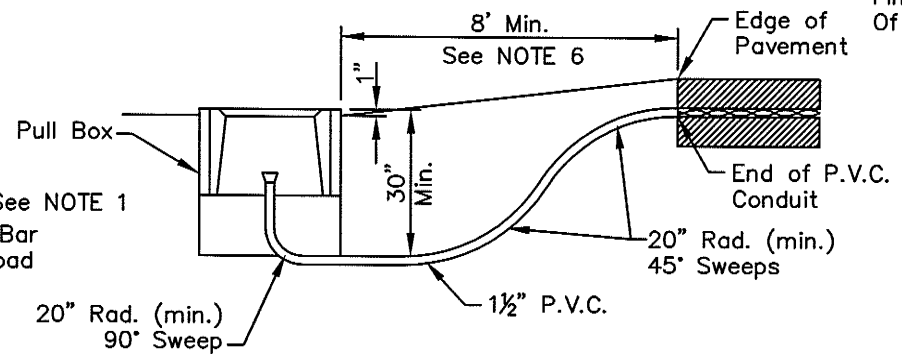

WITHOUT CURB AND GUTTER
Not To Scale

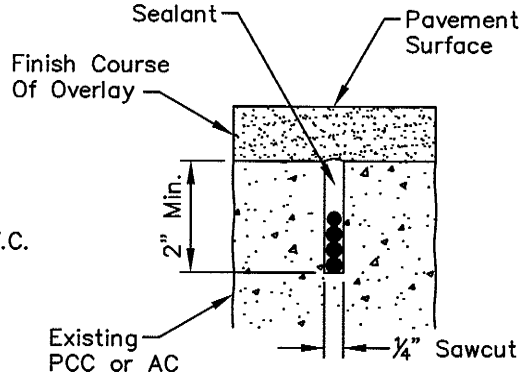

DETAIL 2
Not To Scale

NOTES:

1. Sawcut across corners at a 45° angle to minimize sharp angles in loop run.
2. One loop detector shall be installed per lane and it shall be located in the center of the lane.
3. Loops shall be installed in accordance with the requirements of Detail 1 when there is to be no additional surfacing.
4. Loops shall be installed in accordance with the requirements of Detail 2 when an overlay or top course is installed/constructed.
5. No splices permitted in loop wire.
6. Any pull boxes installed along an uncurbed roadway shall be installed adjacent to, but not within, the shoulder.
7. All pull boxes shall be located on the Project Plans with Station and Offset call–outs.

APPROVED FOR DISTRIBUTION:

9/9/2005

Keith E. Brann, P.E., Date
Acting Town Engineer

Registered Professional Engineer (Civil) CERTIFICATE NO. 38119 SCOTT A. LESKA Date Signed 9/9/05 ARIZONA, U.S.A.

TOWN OF MARANA ARIZONA

STANDARD DETAIL		DETAIL NO:
PRESENCE LOOP DETECTOR		730–712
DATE: 9/9/05	REVISED:	SHEET 1 OF 1

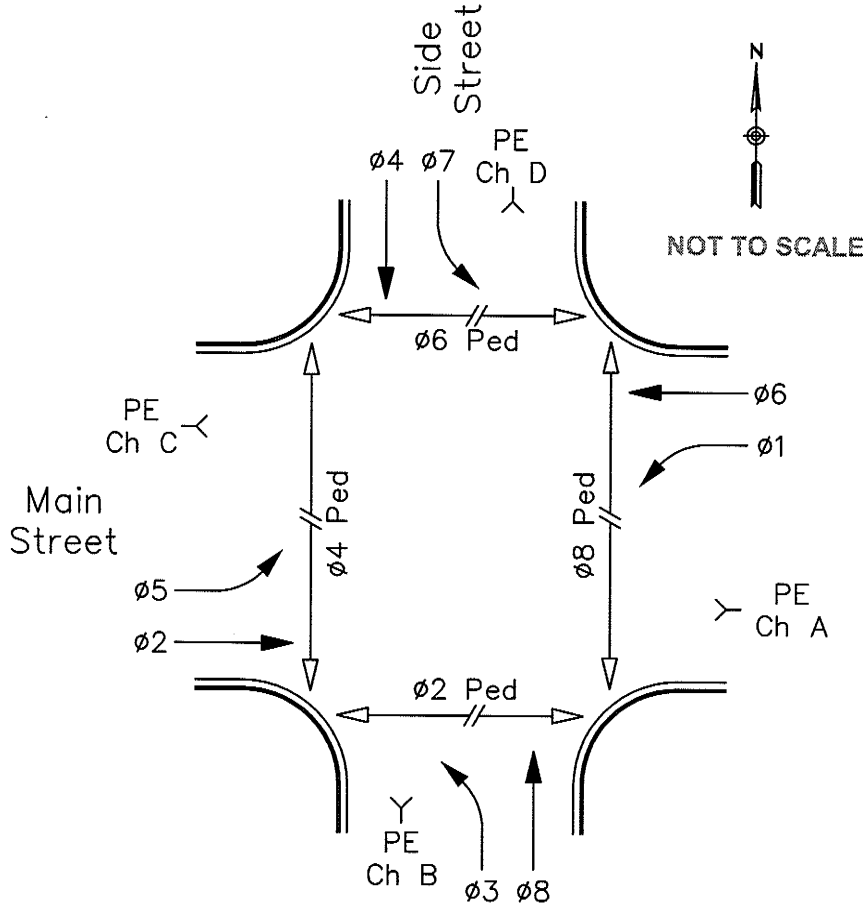

EAST / WEST MAIN STREET

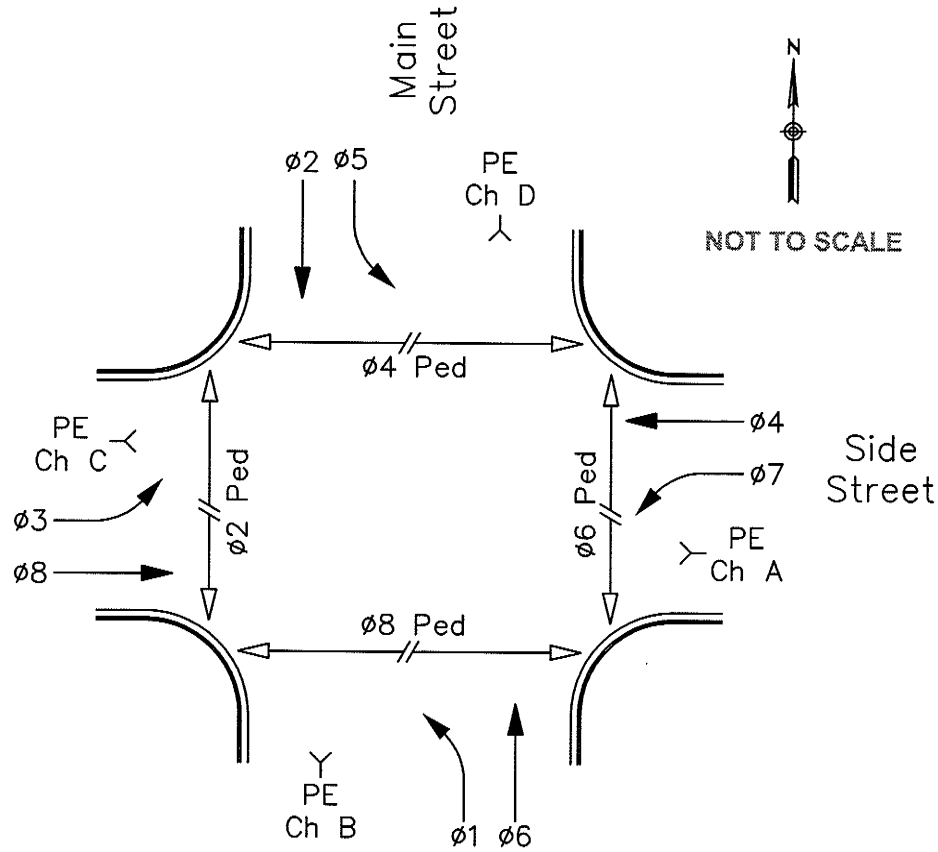

NORTH / SOUTH MAIN STREET

PREEMPTION CHANNELS

PE Channel A = EB Preemptor 1
PE Channel B = SB Preemptor 2
PE Channel C = WB Preemptor 3
PE Channel D = NB Preemptor 4

APPROVED FOR DISTRIBUTION:

10/14/2005

Keith E. Brann, P.E., Acting Town Engineer — Date

Registered Professional Engineer (Civil) — Certificate No. 38119 — SCOTT A. LESKA — Date Signed 10/14/05 — ARIZONA, U.S.A.

TOWN OF MARANA ARIZONA 1977

STANDARD DETAIL		DETAIL NO:
STANDARD TRAFFIC SIGNAL PHASING		730-800
DATE: 9/9/05	REVISED: 10/14/2005	SHEET 1 OF 1

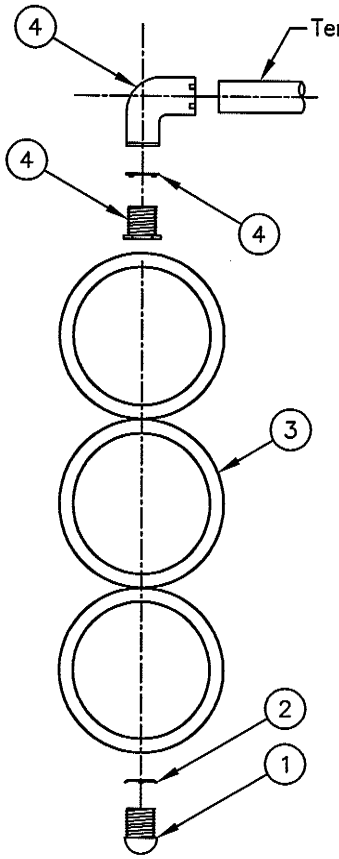

TYPE I MOUNT
Not To Scale

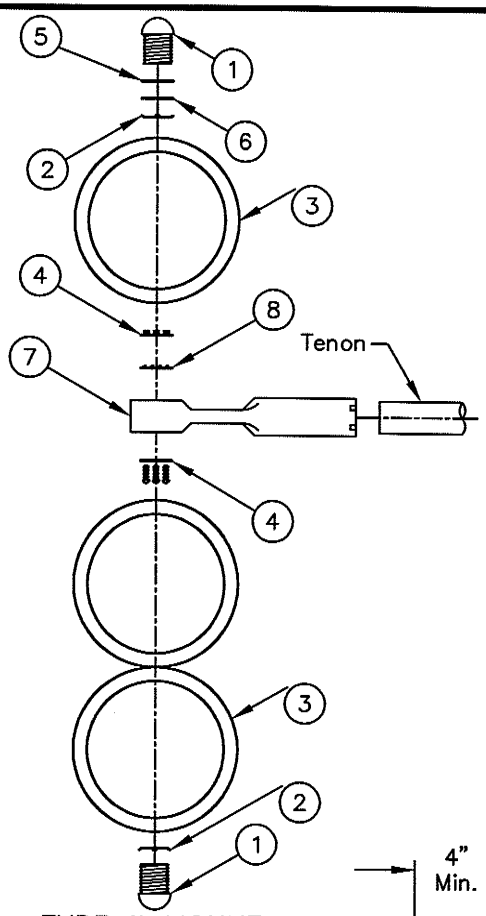

TYPE II MOUNT
Not To Scale

TYPE I MOUNT

LIST OF MATERIALS

Itm.	Qty.	Description
1	1	Mast Arm Plumbizer With Locking Device. (See T.S. 10–2)*
2	1	12" Signal Head. See Plans.
3	1	Conduit Lockout.
4	1	1 ½" x 1 ¾" Lock Nipple.
5	1	Lock Ring. (See T.S. 10–1–4)*
6	1	Ornamental Cap. (See T.S. 10–1–6)*

TYPE II MOUNT

LIST OF MATERIALS

Itm.	Qty.	Description
1	2	Ornamental Cap. (See T.S. 10–1–6)*
2	2	Conduit Locknut.
3	1	12" Signal Head. See Plans.
4	2	Attaching Washers W/3–1/4–20 UNC x 3 ½ Carriage
		Bolts and Nuts.
5	1	Flat Washer.
6	1	Neoprene Washer.
7	1	Elevator Plumbizer. (See T.S. 10–2)*
8	1	Lock Washer.

* Standard Details for Public Improvements COT/PC 1994 edition

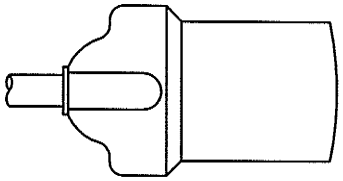

MOUNTING ORIENTATION PLAN
Not To Scale

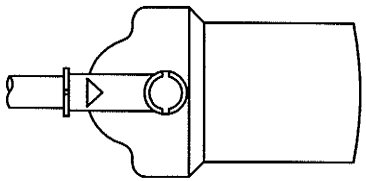

MOUNTING ORIENTATION PLAN
Not To Scale

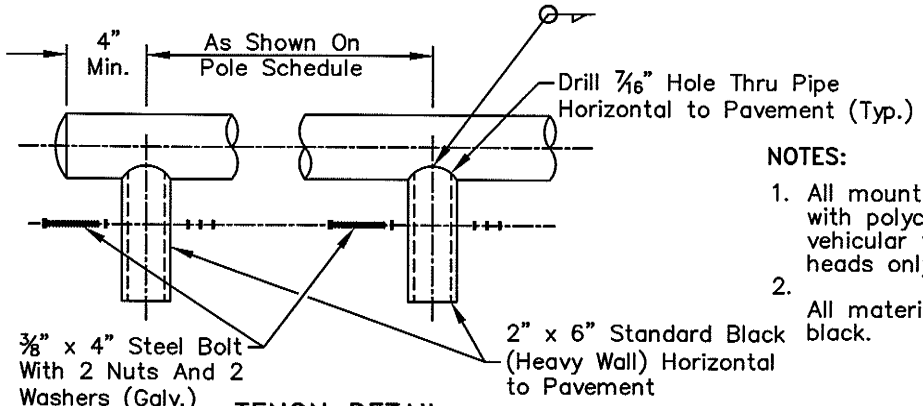

TENON DETAIL
Not To Scale

NOTES:

1. All mounts shall be used with polycarbonate vehicular traffic signal heads only.
2. All materials shall be black.

APPROVED FOR DISTRIBUTION:

9/9/2005

Keith E. Brann, P.E.,
Acting Town Engineer

Date

Registered Professional Engineer (Civil) CERTIFICATE NO. 38119 SCOTT A. LESKA Date Signed 9/9/05 ARIZONA, U.S.A.

TOWN OF MARANA ARIZONA 1977

STANDARD DETAIL		DETAIL NO:
TYPE I AND II MOUNTING ASSEMBLIES		730–901
DATE: 9/9/05	REVISED:	SHEET 1 OF 1

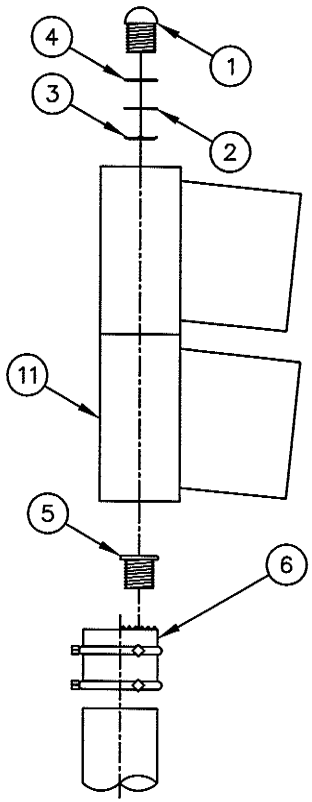

TYPE III MOUNT
Not To Scale

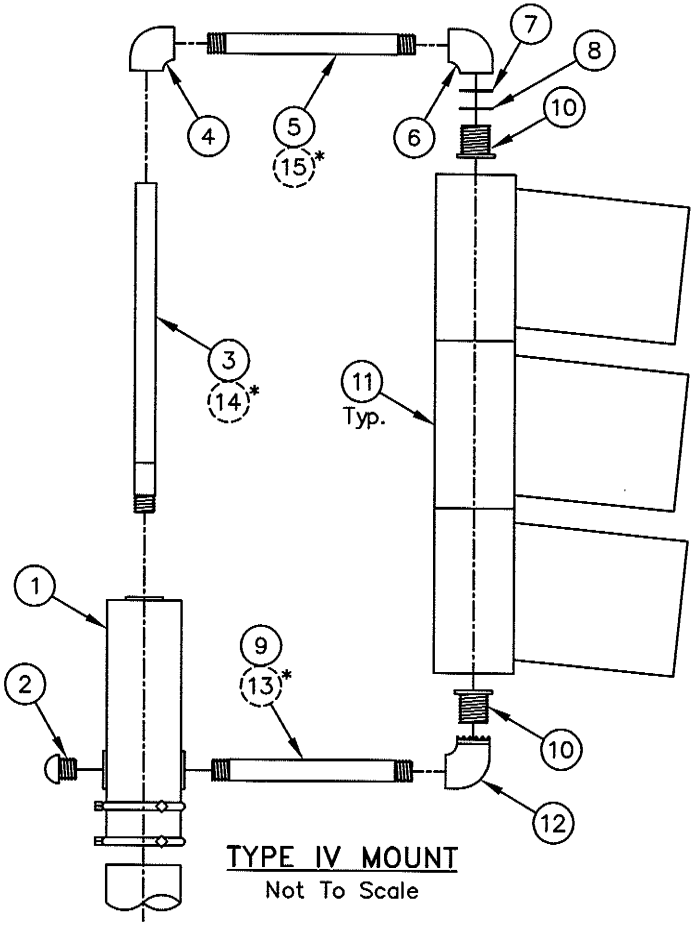

TYPE IV MOUNT
Not To Scale

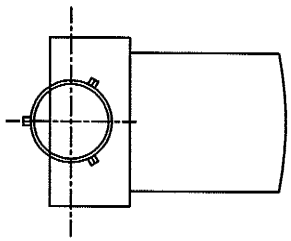

MOUNTING ORIENTATION PLAN
Not To Scale

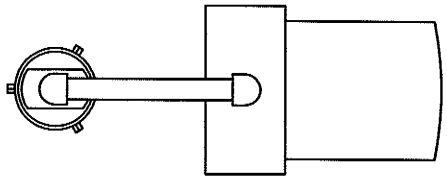

MOUNTING ORIENTATION PLAN
Not To Scale

TYPE III MOUNT

LIST OF MATERIALS

Itm.	Qty.	Description
1	1	Ornamental Cap. (T.S. 10–1–6)**
2	1	Neoprene Washer.
3	1	Conduit Locknut.
4	1	Flat Washer.
5	1	1½" Lock Nipple 1⅛" Long.
6	1	Pole Top Offset Mount. (T.S. 10–1–3)**
7	1	Signal Head, See Plans.

TYPE IV MOUNT

LIST OF MATERIALS

Itm.	Qty.	Description
1	1	Pole Top Mounted Terminal Compartment. (T.S. 10–4–2)**
2	1	Ornamental Cap. (T.S. 10–1–6)**
3	1	1½" Center Pipe ***
4	1	90° Elbow, Drill & Tap for Setscrew.
5	1	1½" Pipe Nipple, 12½" Long For Pedestrian & Signal Heads.
6	1	90° Elbow.
7	1	Flat Washer.
8	1	Neoprene Washer.
9	1	1½" Pipe Nipple, 12" Long.
10	2	1½" Lock Nipple See Note 1.
11	1	12" Signal Head. See Plans.
12	1	90° Elbow With Locking Device. (TS 10–1–2)**
13*	1	1½" Pipe Nipple, 12" Long.
14*	1	1½" Pipe Nipple, 9 1/2" Long for Ped. Signal, For Illuminated Message Units Use 23⅝" x 1½" Pipe.
15*	1	1½" Pipe Nipple, 12 1/2" Long.

** Standard Details for Public Improvements COT/PC 1994 edition.

*** Nipple length shall be determined by Contractor to ensure a correct fit for the type of vehicular traffic signal head being installed.

NOTES:

1. Lock nipple length shall be 1¾" for 12" heads.
2. All materials shall be black.

APPROVED FOR DISTRIBUTION:

9/9/2005

Keith E. Brann, P.E., Acting Town Engineer — Date

Registered Professional Engineer (Civil) CERTIFICATE NO. 38119 SCOTT A. LESKA Date Signed 9/9/05 ARIZONA, U.S.A.

TOWN OF MARANA ARIZONA

STANDARD DETAIL		DETAIL NO:
TYPE III AND IV MOUNTING ASSEMBLIES		730–902
DATE: 9/9/05	REVISED:	SHEET 1 OF 1

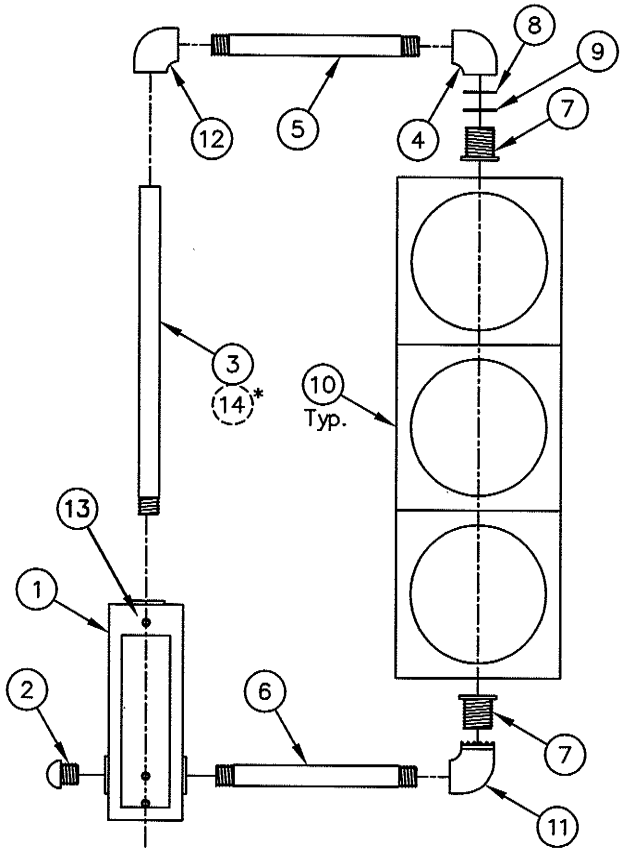

TYPE V MOUNT
Not To Scale

LIST OF MATERIALS		
Itm.	Qty.	Description
1	1	Terminal Compartment For Side Mtg. (See T.S. 10–4–1)**
2	1	Ornamental Cap. (See T.S. 10–1–6)**
3	1	1½" I.D. Pipe ***
4	1	1½" I.D. Pipe, 90° Elbow.
5	1	1½" I.D. Pipe Nipple, 24½" Long.
6	1	1½" I.D. Pipe Nipple, 24" Long
7	1	1½" Lock Nipple, See Note No. 1.
8	1	Flat Washer.
9	1	Neoprene Washer.
10	1	12" Signal Head. See Plans.
11	1	90° Ell With Locking Device. (T.S. 10–1–2)**
12	1	1½" I.D. Pipe 90° Elbow, Drill & Tap For Setscrew.
13	2	½" x 2" Galvanized Steel Bolt 13–UNC With Flat Washer and Lock Washer.
14*	1	1½" Pipe Nipple 9½"–For Pedestrian Signal Units Only. (For Illuminated Message, Use 25⅜" Pipe)

** Standard Details for Public Improvements COT/PC 1994 edition.
*** Nipple length shall be determined by Contractor to ensure a correct fit for the type of vehicular traffic signal head being installed.

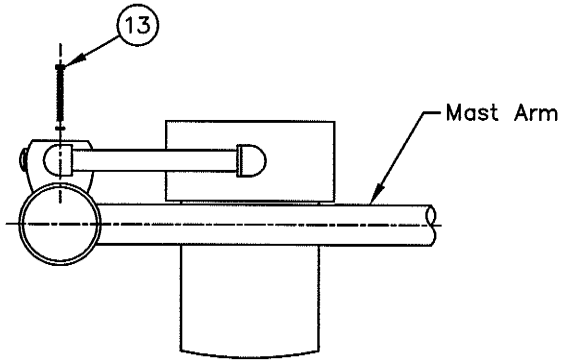

MOUNTING
ORIENTATION PLAN
Not To Scale

NOTES:

1. Lock nipple length shall be 1¾" for 12" heads.
2. All materials shall be black.

APPROVED FOR DISTRIBUTION:

9/9/2005

Keith E. Brann, P.E., Acting Town Engineer — Date

Registered Professional Engineer (Civil) 38119 SCOTT A. LESKA ARIZONA, U.S.A. Date Signed 9/9/05

TOWN OF MARANA ARIZONA 1977

STANDARD DETAIL		DETAIL NO:
TYPE V MOUNTING ASSEMBLY		730–903
DATE: 9/9/05	REVISED:	SHEET 1 OF 1

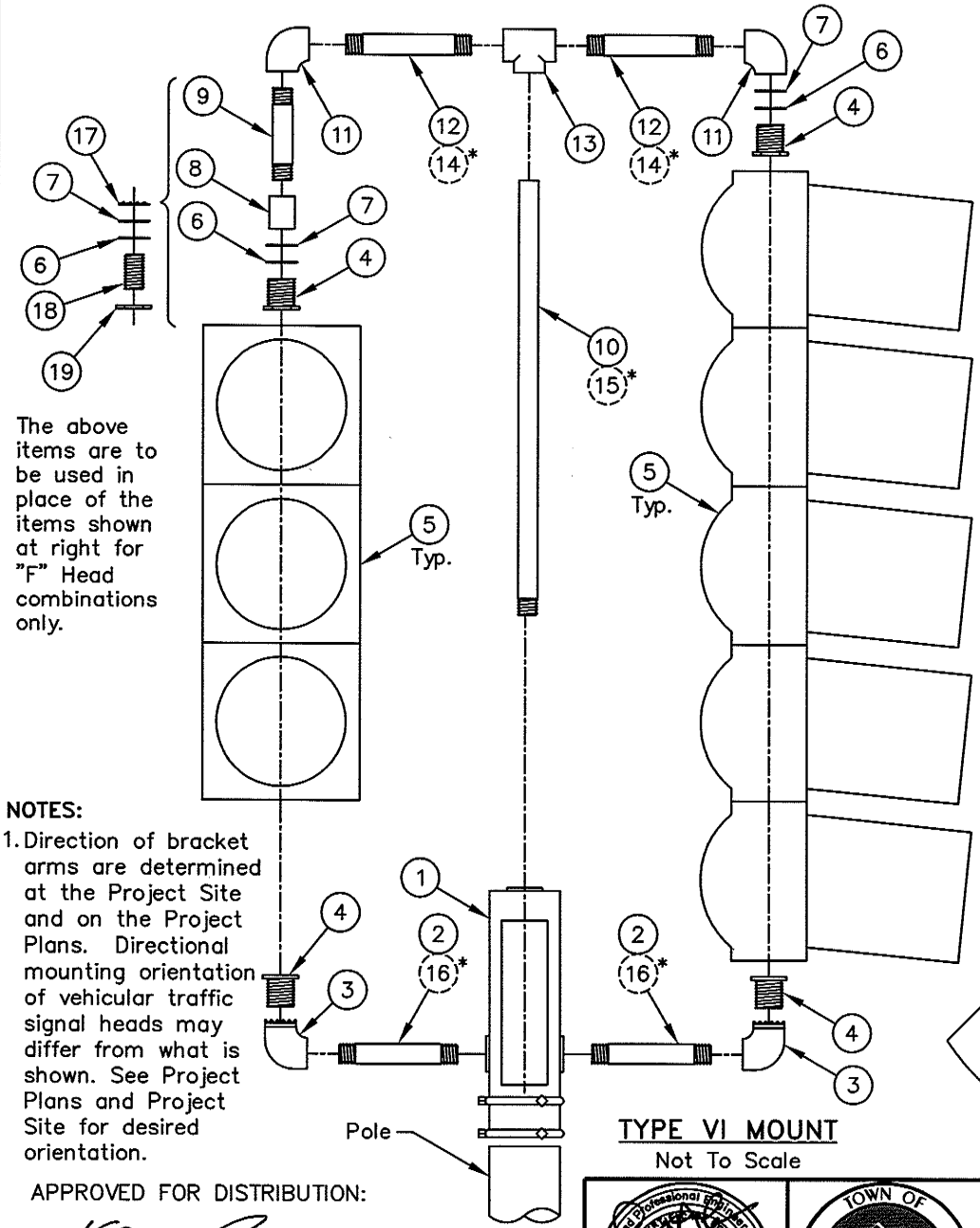

TYPE VI MOUNT
Not To Scale

LIST OF MATERIALS		
Itm.	Qty.	Description
1	1	Terminal Compartment Pole Top Mtg. (See T.S. 10–4–1)**
2	2	1½" I.D. Pipe Nipple, 12" Long.
3	2	90° Ell With Locking Device. (See T.S. 10–1–2)**
4	4	1½" Lock Nipple, See NOTE No. 1.
5	2	12" Signal Head. See Plans.
6	2	Neoprene Washer.
7	2	Flat Washer.
8	1	1½" Pipe Coupling, As Required.
9	1	1½" Pipe Nipple ***
10	1	1½" Center Pipe ***
11	2	90° Elbow, 1½".
12	2	1½" Pipe Nipple, 12½" Long.
13	1	Pipe Tee, Drill & Tap for Setscrew.
14*	2	1½" Pipe Nipple, 12½" Long For Ped. Signal Heads.
15*	1	1½" Pipe Nipple, 9½" Long For Ped. Signal Heads.
16*	2	1½" Pipe Nipple, 12" Long For Ped. Signal Heads.
17	1	Conduit Lock Nut. (For 'F' & 'R' Combination Only)
18	1	1½" Pipe Nipple, 3" Long. (For 'F' & 'R' Combination Only)
19	1	Malleable Hex Nut. (For 'F' & 'R' Combination Only)

** Standard Details for Public Improvements COT/PC 1994 edition.
*** Nipple length shall be determined by Contractor to ensure a correct fit for the type of vehicular traffic signal head being installed.

NOTES:

1. Direction of bracket arms are determined at the Project Site and on the Project Plans. Directional mounting orientation of vehicular traffic signal heads may differ from what is shown. See Project Plans and Project Site for desired orientation.

NOTES (Cont.):

2. Lock nipple length shall be 1¾" for 12" heads.
3. All materials shall be black.
4. Mounting orientation may differ from what is shown. See Project Plans and Project Site for desired orientation.

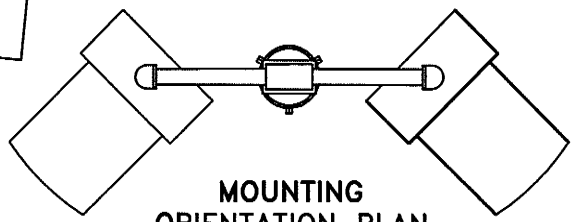

MOUNTING ORIENTATION PLAN
Not To Scale

APPROVED FOR DISTRIBUTION:

9/9/2005

Keith E. Brann, P.E., Acting Town Engineer — Date

Registered Professional Engineer (Civil) 38119 SCOTT A. LESKA Date Signed 9/9/05 ARIZONA, U.S.A.

TOWN OF MARANA ARIZONA 1977

STANDARD DETAIL		DETAIL NO:
TYPE VI MOUNTING ASSEMBLY		730–904
DATE: 9/9/05	REVISED:	SHEET 1 OF 1

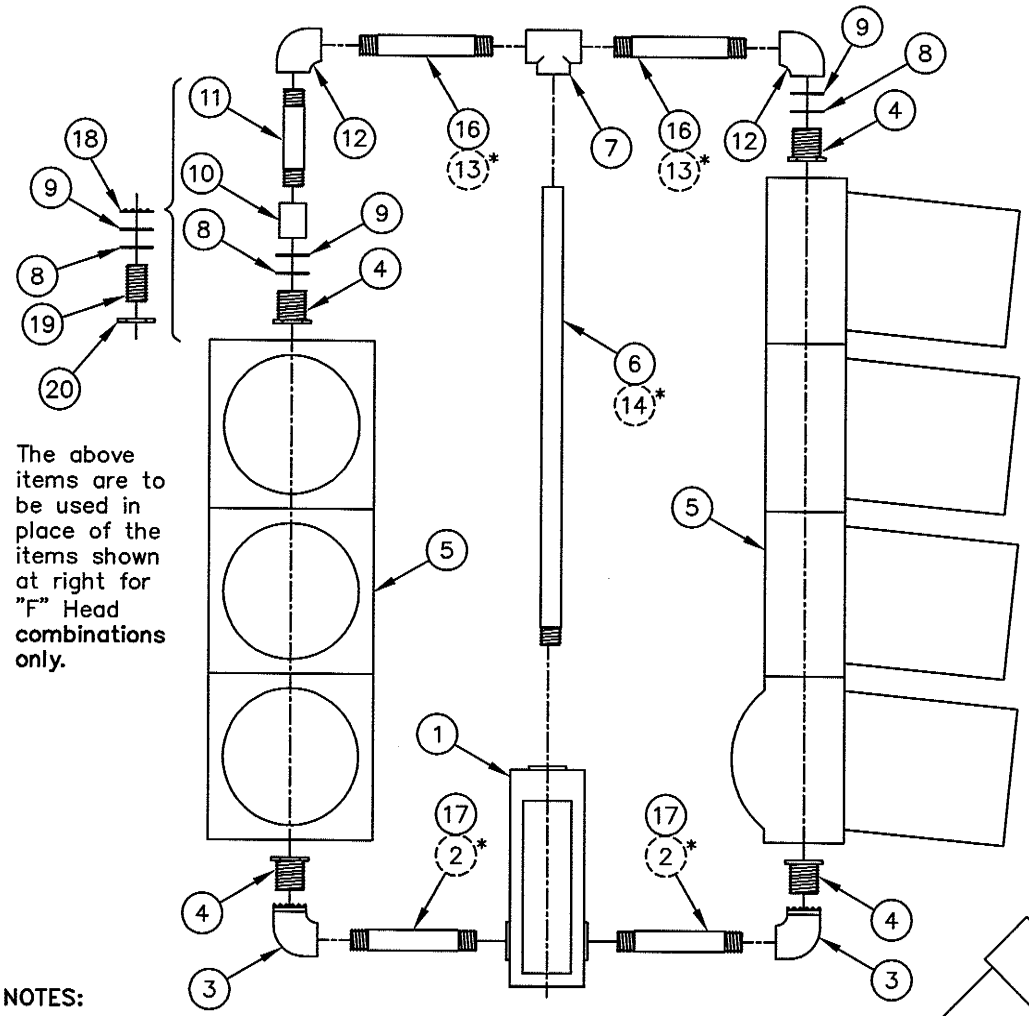

The above items are to be used in place of the items shown at right for "F" Head **combinations only.**

LIST OF MATERIALS

Itm.	Qty.	Description
1	1	Terminal Compartment Pole Top Mtg. (See T.S. 10–4–1)**
2*	2	1½" Pipe Nipple, 11½" Long. (For Ped. Signal Heads)
3	2	90° Elbow With Locking Device. (See T.S. 10–1–2)**
4	4	1½" Lock Nipple, See NOTE 1.
5	2	12" Signal Head. See Plans.
6	1	Center Pipe ***
7	1	Tee, Drill & Tap For Setscrew.
8	2	Neoprene Washer.
9	2	Flat Washer.
10	1	1½" Pipe Coupling, As Required.
11	1	1½" Pipe Nipple ***
12	2	90° Elbow.
13*	2	1½" Pipe Nipple, 12" Long. (For Ped. Signal Heads)
14*	1	1½" Pipe Nipple, 9½" Long. (For Ped. Signal Heads)
15	2	½"x2" Galvanized Steel Bolt 13 UNC With Flat Washer And Lock Washer.
16	2	1½" Pipe Nipple, 24½" Long.
17	2	1½" Pipe Nipple, 24" Long.
18	1	Conduit Lock Nut. (For 'F' & 'R' Combination Only)
19	1	1½" Pipe Nipple, 3" Long. (For 'F' & 'R' Combination Only)
20	1	Malleable Hex Nut. (For 'F' & 'R' Combination Only)

** Standard Details for Public Improvements COT/PC 1994 edition.

*** Nipple length shall be determined by Contractor to ensure a correct fit for the type of vehicular traffic signal head being installed.

NOTES:

1. Direction of bracket arms are determined at the Project Site and on the Project Plans. Directional mounting orientation of vehicular traffic signal heads may differ from what is shown. See Project Plans and Project Site for desired orientation.

TYPE VII MOUNT

Not To Scale

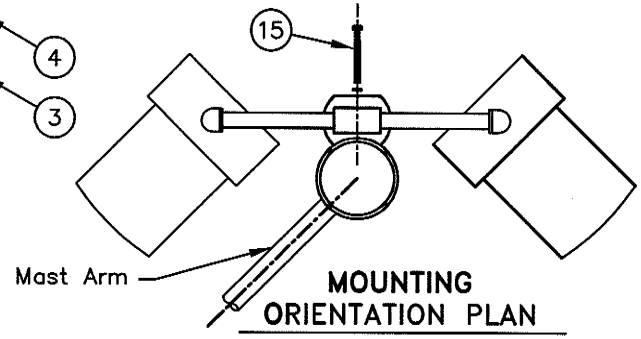

MOUNTING ORIENTATION PLAN

Not To Scale

NOTES (Cont.):

2. Lock nipple length shall be and 1¾" for 12" heads.
3. All materials shall be black.
4. Mounting orientation may differ from what is shown. See Project Plans and Project Site for desired orientation.

APPROVED FOR DISTRIBUTION:

9/9/2005

Keith E. Brann, P.E., Acting Town Engineer — Date

Registered Professional Engineer (Civil) Certificate No. 38119 SCOTT A. LESKA Date Signed 9/9/05 ARIZONA, U.S.A.

TOWN OF MARANA ARIZONA 1977

STANDARD DETAIL		DETAIL NO:
TYPE VII MOUNTING ASSEMBLY		730–905
DATE: 9/9/05	REVISED:	SHEET 1 OF 1

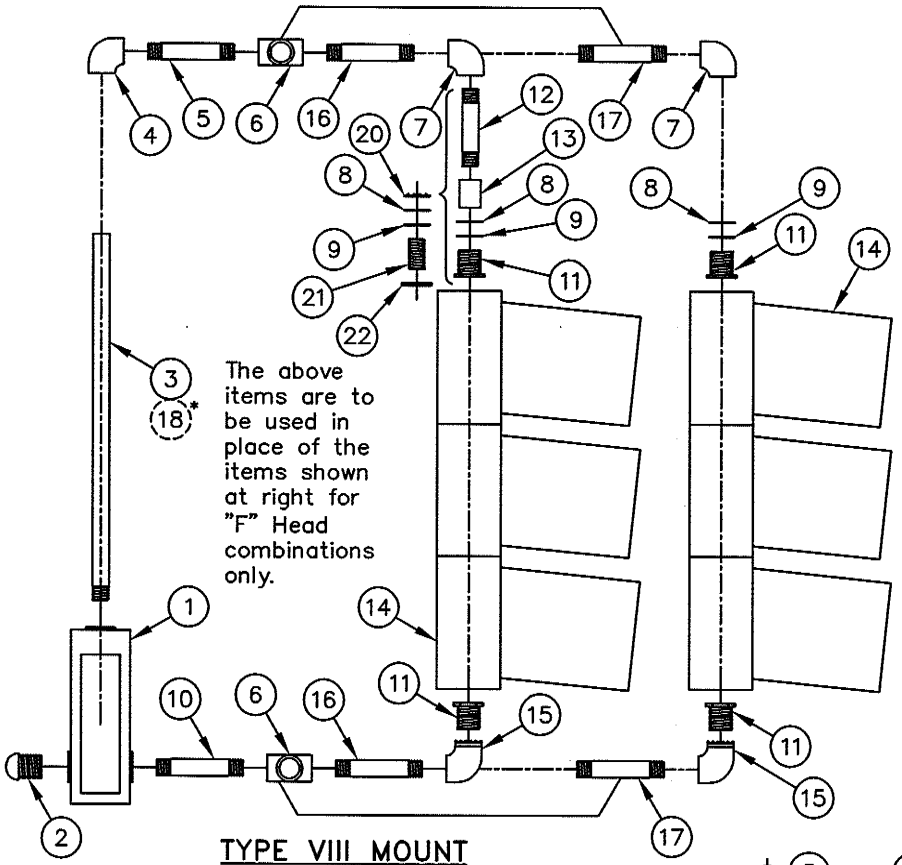

TYPE VIII MOUNT
Not To Scale

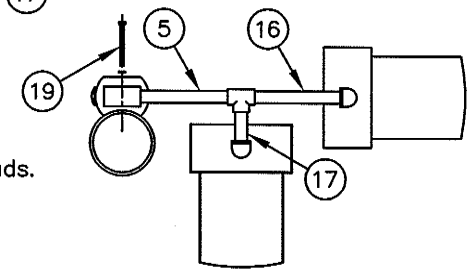

MOUNTING ORIENTATION PLAN
Not To Scale

LIST OF MATERIALS		
Itm.	Qty.	Description
1	1	Terminal Compartment Pole Top Mtg. (See T.S. 10–4–1)**
2	1	Ornamental Cap. (See T.S. 10–1–6)**
3	1	1½" Pipe ***
4	1	1½" 90° Elbow, Drill & Tap For Setscrew.
5	11	1½" I.D. Pipe Nipple, 12½" Long.
6	2	1½" Pipe Tee.
7	2	90° Elbow.
8	2	Flat Washer.
9	1	Neoprene Washer.
10	4	1½" I.D. Pipe Nipple, 12" Long.
11	1	1½" Lock Nipple, See NOTE 1.
12	1	1½" I.D. Pipe Nipple ***
13	2	1½" Coupling, As Required.
14	2	12" Signal Head. See Plans.
15	2	90° Elbow With Locking Device. (See T.S. 10–1–2)**
16	2	1½" I.D. Pipe Nipple, 12" Long.
17	1	1½" I.D. Pipe Nipple, 12" Long.
18*	2	1½" I.D. Pipe Nipple, 9½" Long. For Ped Signal Only.
19	1	½" x 2" Galvanized Steel Bolt 13–UNC With Flat Washer And Lock Washer.
20	1	Conduit Lock Nut. (For 'F' & 'R' Combination Only)
21	1	1½" I.D. Pipe Nipple, 3" Long. (For 'F' And 'R' Combination Only)
22	1	Malleable Hex Nut. (For 'F' & 'R' Combination Only)

** Standard Details for Public Improvements COT/PC 1994 edition.

*** Nipple length shall be determined by Contractor to ensure a correct fit for the type of vehicular traffic signal head being installed.

NOTES:

1. Lock nipple length shall be and 1 ¾" for 12" heads.
2. All materials shall be black.
3. Direction of bracket arms are determined at the Project Site and on the Project Plans. Directional mounting orientation of vehicular traffic signal heads may differ from what is shown. See Project Plans and Project Site for desired orientation.

APPROVED FOR DISTRIBUTION:

9/9/2005

Keith E. Brann, P.E., Acting Town Engineer — Date

Registered Professional Engineer (Civil) No. 38119 SCOTT A. LESKA Date Signed 9/9/05 ARIZONA, U.S.A.

TOWN OF MARANA ARIZONA 1977

STANDARD DETAIL		DETAIL NO:
TYPE VIII MOUNTING ASSEMBLY		730–906
DATE: 9/9/05	REVISED:	SHEET 1 OF 1

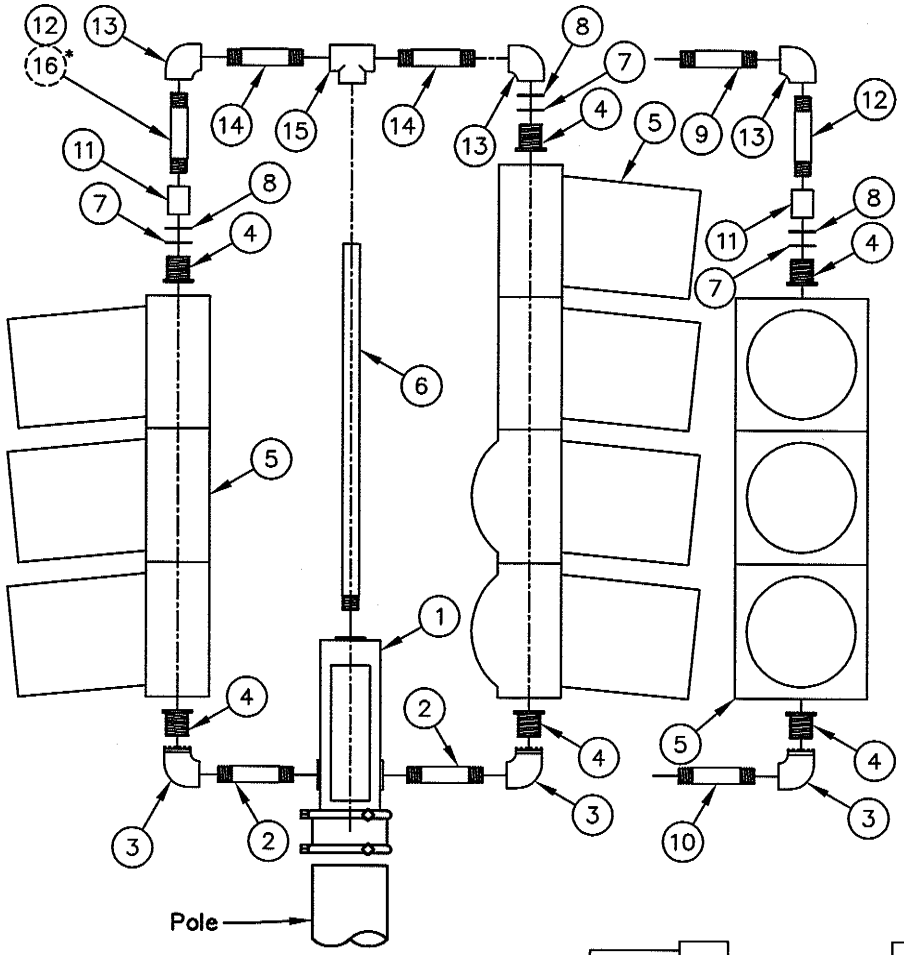

TYPE IX MOUNT
Not To Scale

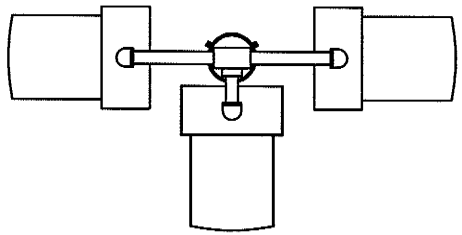

MOUNTING ORIENTATION PLAN
Not To Scale

LIST OF MATERIALS		
Itm.	Qty.	Description
1	1	Pole Top Mtd. Terminal Compartment. (T.S. 10–4–2)**
2	2	1½" Pipe Nipple, 6" Long.
3	3	90° Elbow With Locking Device. (See T.S. 10–1–2)**
4	6	1½" Lock Nipple, See NOTES 1 & 3.
5	3	12" Signal Head. See Plans.
6	1	1½" Pipe ***
7	3	Neoprene Washer.
8	3	Flat Washer.
9	1	1½" Pipe Nipple, 12½" Long.
10	1	1½" Pipe Nipple, 12" Long.
11	2	1½" Coupling, As Required.
12	2	1½" Pipe Nipple ***
13	3	90° Elbow.
14	2	1½" Pipe Nipple, 6½" Long.
15	1	Tee With Side Outlet, Drill & Tap For Setscrew.
16	1	1½" I.D. Pipe Nipple, 49" Long For Pedestrian Signal.

** Standard Details for Public Improvements COT/PC 1994 edition.

*** Nipple length shall be determined by Contractor to ensure a correct fit for the type of vehicular traffic signal head being installed.

NOTES:

1. Lock nipple length shall be and 1¾" for 12" heads.
2. All materials shall be black.
3. Lock Nut is required in place of Lock Nipple when "F" face face or "R" face are hung on same frame.
4. Direction of bracket arms are determined at the Project Site and on the Project Plans. Directional mounting orientation of vehicular traffic signal heads may differ from what is shown. See Project Plans and Project Site for desired orientation.

APPROVED FOR DISTRIBUTION:

9/9/2005

Keith E. Brann, P.E., Acting Town Engineer — Date

Registered Professional Engineer (Civil) Cert. No. 38119 SCOTT A. LESKA Date Signed 9/9/05 ARIZONA, U.S.A.

TOWN OF MARANA ARIZONA

STANDARD DETAIL		DETAIL NO:
TYPE IX MOUNTING ASSEMBLY		730–907
DATE: 9/9/05	REVISED:	SHEET 1 OF 1

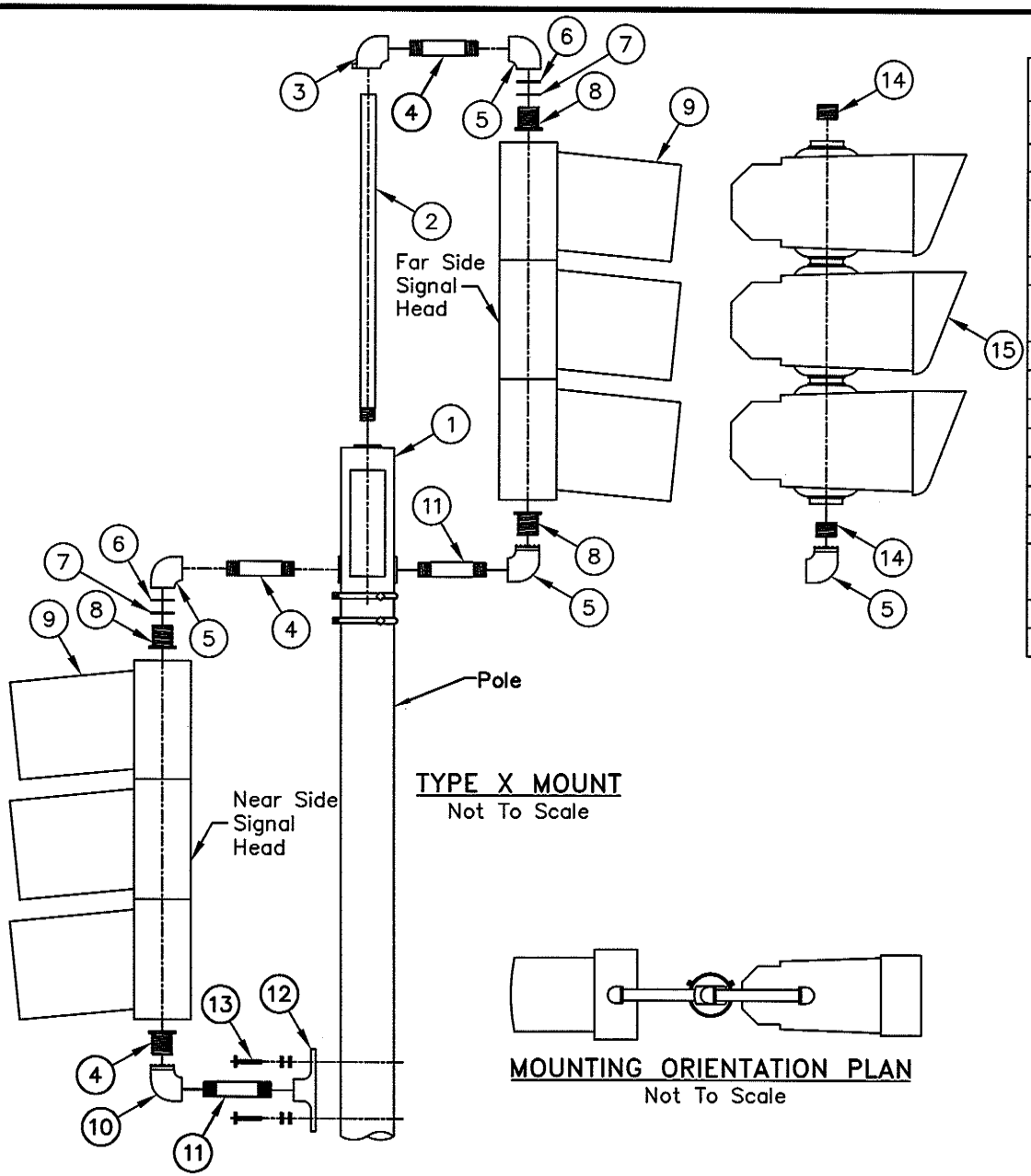

TYPE X MOUNT
Not To Scale

MOUNTING ORIENTATION PLAN
Not To Scale

LIST OF MATERIALS		
Itm.	Qty.	Description
1	1	Pole Top Mtd. Terminal Compartment. (T.S. 10–4–2)*
2	1	½" Pipe ***
3	1	Elbow, 1½", 90°, Reamed, Drilled, and Tapped For Screw.
4	2	Nipple, 1½" x 14½".
5	2	Elbow, 1½", 90° (3 Required When Optical Signal is Used.)
6	2	Flat Washer.
7	2	Neoprene Washer.
8	4	1½" Lock Nipple, See NOTE 1.
9	2	12" Signal Head. See Plans.
10	2	Elbow, 1½", 90°, With Locking Device.
11	2	Nipple, 1½" x 14"
12	1	Pole Plate. (T.S. 10–3–2)*
13	2	½" x 2" Galvanized Steel Bolt 13–UNC With Flat Washer and Lock Washer.
14	2	Close Nipple, 1½" x 1¾".
15	1	Programmed Visibility Signal Assembly.

** Standard Details for Public Improvements COT/PC 1994 edition.

*** Pipe nipple length shall be determined by Contractor to ensure a correct fit for the type of vehicular traffic signal head being installed.

NOTES:

1. Lock nipple length shall be and 1¾" for 12" heads.
2. All materials shall be black.
3. Direction of Bracket arms are determined at the Project Site and on the Project Plans. Directional mounting orientation of vehicular traffic signal heads may differ from what is shown. See Project Plans and Project Site for desired orientation.

APPROVED FOR DISTRIBUTION:

9/9/2005

Keith E. Brann, P.E., Acting Town Engineer — Date

Registered Professional Engineer (Civil) 38119 SCOTT A. LESKA Date Signed 9/9/05 ARIZONA, U.S.A.

TOWN OF MARANA ARIZONA 1777

STANDARD DETAIL		DETAIL NO:
TYPE X MOUNTING ASSEMBLY		730–908
DATE: 9/9/05	REVISED:	SHEET 1 OF 1

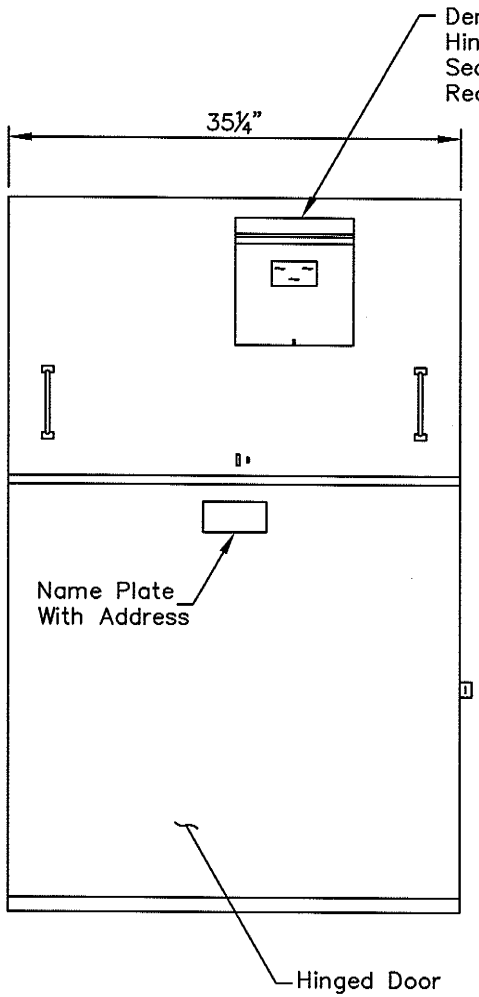

FRONT VIEW
Not To Scale

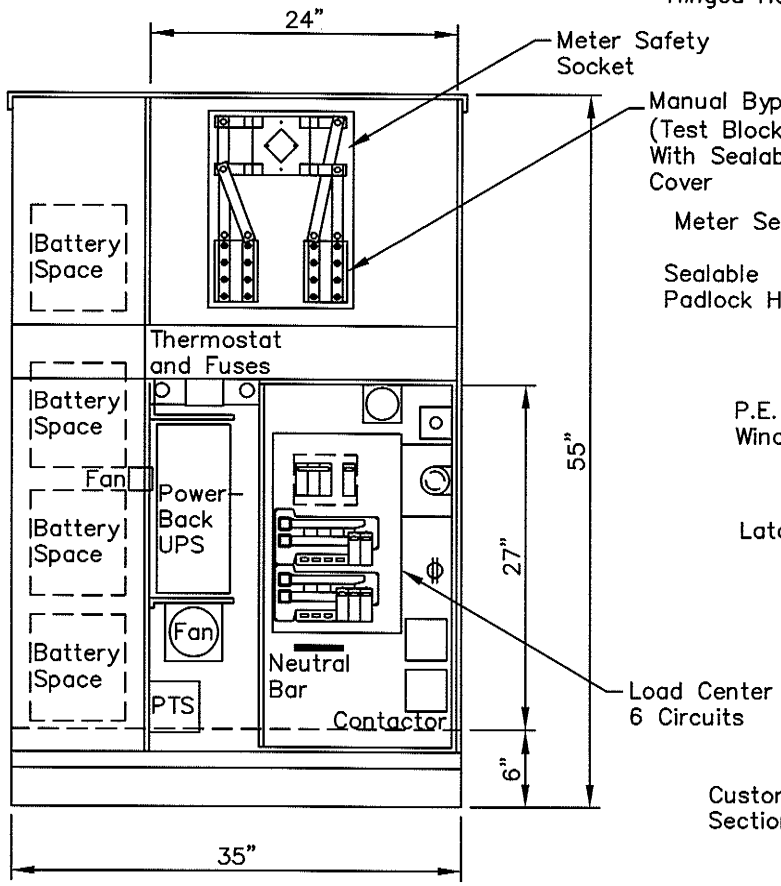

FRONT VIEW
LESS DOOR, DEADFRONT, AND COVER
Not To Scale

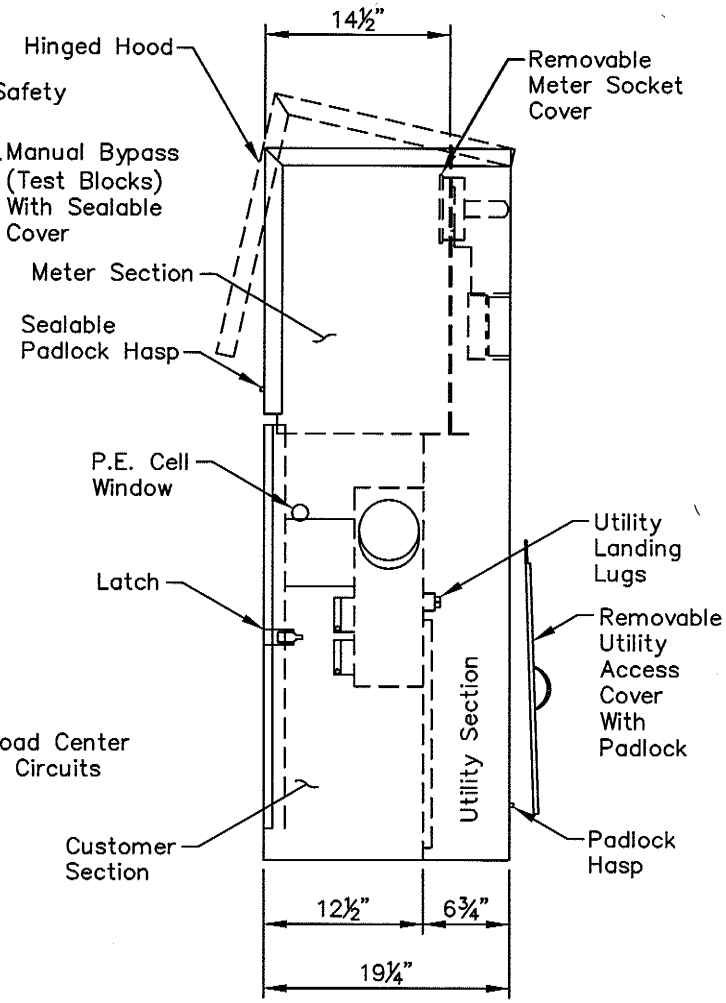

SIDE VIEW
Not To Scale

Note:

1. Load service calculations shall be provided and shown on the plans.
2. Single line electrical service diagrams to shall be shown on plans.

APPROVED FOR DISTRIBUTION:

9/9/2005

Keith E. Brann, P.E., Acting Town Engineer — Date

Registered Professional Engineer (Civil) 38119 SCOTT A. LESKA Date Signed 9/9/05 ARIZONA, U.S.A.

TOWN OF MARANA ARIZONA 1977

STANDARD DETAIL		DETAIL NO:
UPS AND ELECTRIC SERVICE		730-1810
DATE: 9/9/05	REVISED:	SHEET 1 OF 2

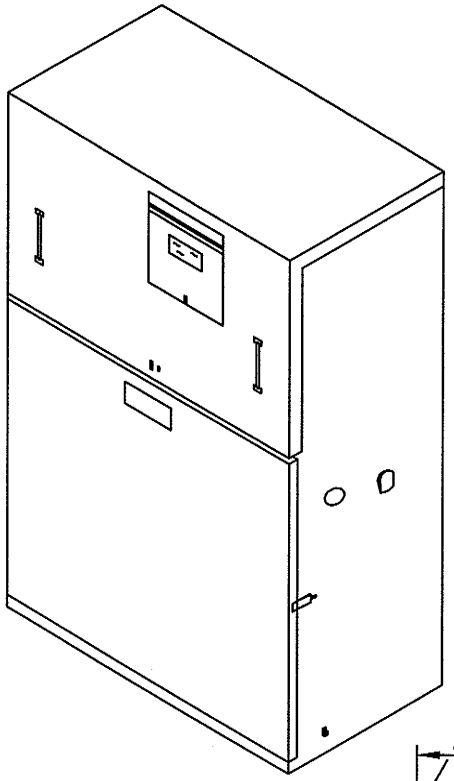

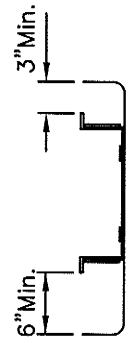

SIDE VIEW
Not To Scale

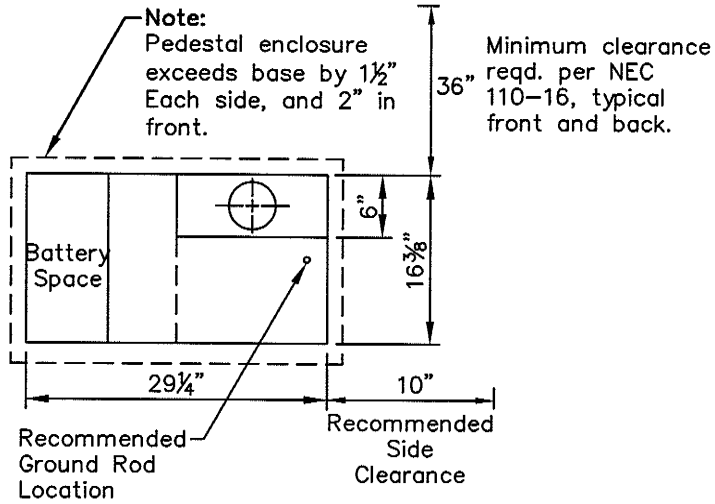

PLAN VIEW
Not To Scale

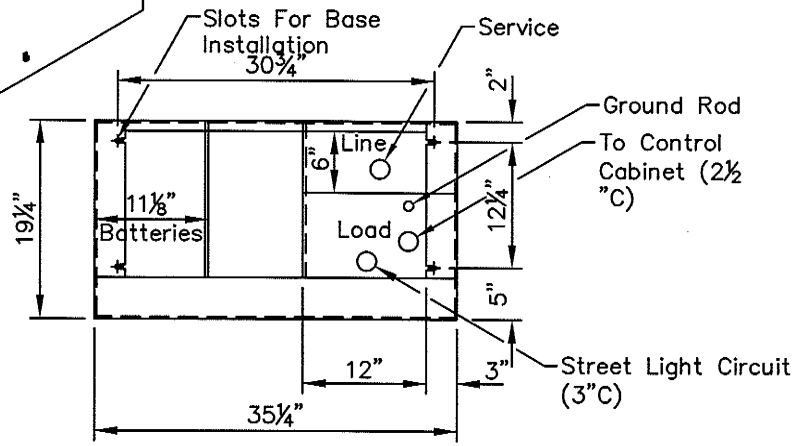

PEDESTAL PLAN VIEW
MOUNTING SLOT DETAIL
Not To Scale

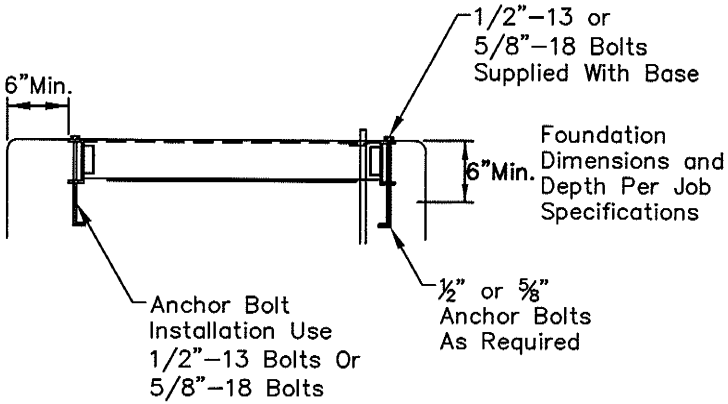

FRONT VIEW
Not To Scale

APPROVED FOR DISTRIBUTION:

9/9/2005

Keith E. Brann, P.E., Acting Town Engineer — Date

Registered Professional Engineer (Civil) CERTIFICATE NO. 38119 SCOTT A. LESKA Date Signed 9/9/05 ARIZONA, U.S.A.

TOWN OF MARANA ARIZONA 1977

STANDARD DETAIL		DETAIL NO:
UPS AND ELECTRIC SERVICE		730–1810
DATE: 9/9/05	REVISED:	SHEET 2 OF 2

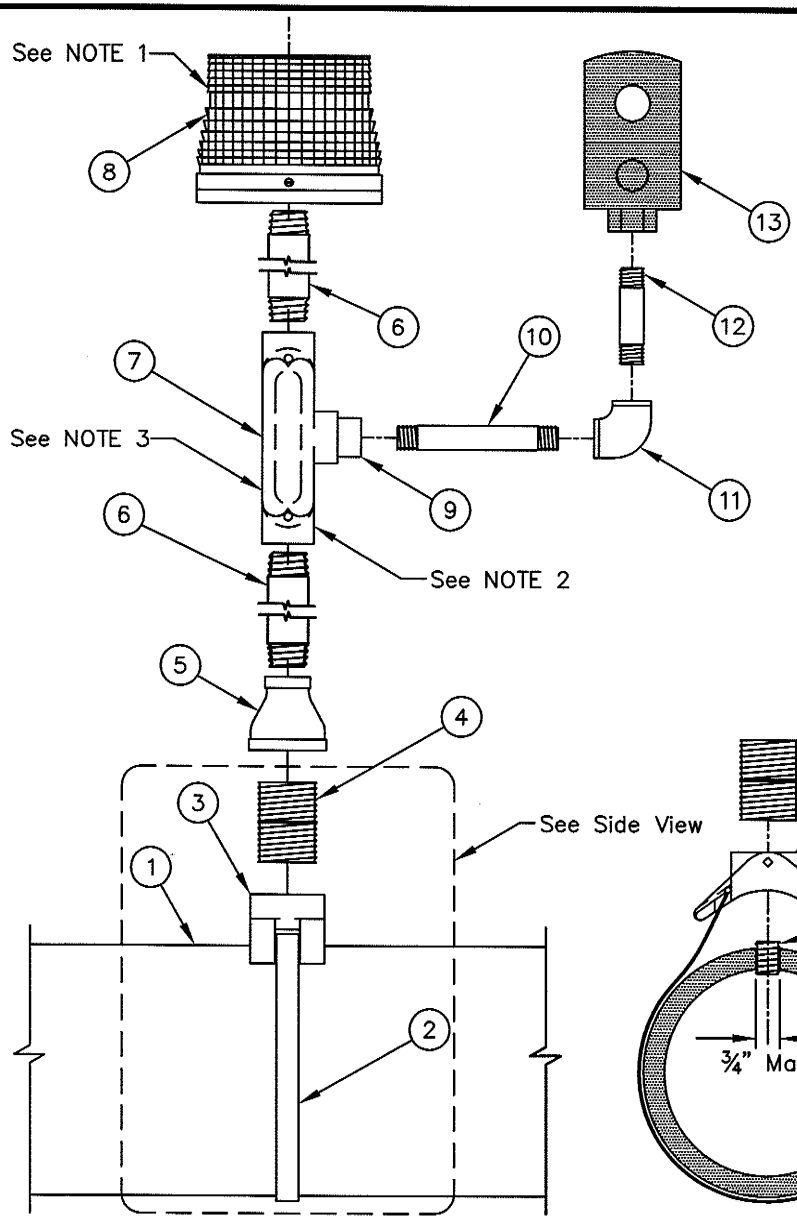

FRONT VIEW
Not To Scale

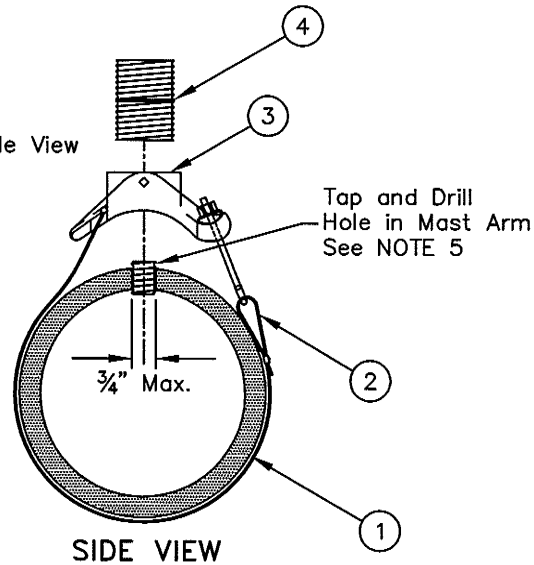

SIDE VIEW
Not To Scale

LIST OF MATERIALS		
Itm.	Qty.	Description
1	1	Signal Mast Arm (See Plans)
2	1	⅝" Banding
3	1	Pelco Astro Mini–Brac Band Mount AB–0121–42–NPT Or Approved Equal
4	1	1½" Chase Nipple (Black Pipe)
5	1	1½"–1" Reducer (Black Pipe, Painted Black)
6	2	12" Chase Nipple (Black Pipe)
7	1	1" Conduit Body C Style
8	1	Flashing Beacon, See Note 1
9	1	1"–¾" Reducer
10	1	3/4" Pipe Nipple, 5" Long
11	1	3/4" 90° Elbow
12	1	3/4" Pipe Nipple, 3" Long
13	1	Optical Detector

NOTES:

1. North/South pre–emption: Use clear beacon.
   East/West pre–emption: Use blue beacon.
   Whelen part No. IS3220I or approved equal.
2. Face plate shall face away from approaching traffic.
3. Conduit body shall be primed and then painted black.
4. 2' minimum spacing from any other penetration into mast arm.

APPROVED FOR DISTRIBUTION:

9/9/2005

Keith E. Brann, P.E., Acting Town Engineer — Date

Registered Professional Engineer (Civil) 38119 SCOTT A. LESKA Date Signed 9/9/05 ARIZONA, U.S.A.

TOWN OF MARANA ARIZONA 1977

STANDARD DETAIL		DETAIL NO:
PRE–EMPTION MOUNTING DETAIL		730–1910
DATE: 9/9/05	REVISED:	SHEET 1 OF 1

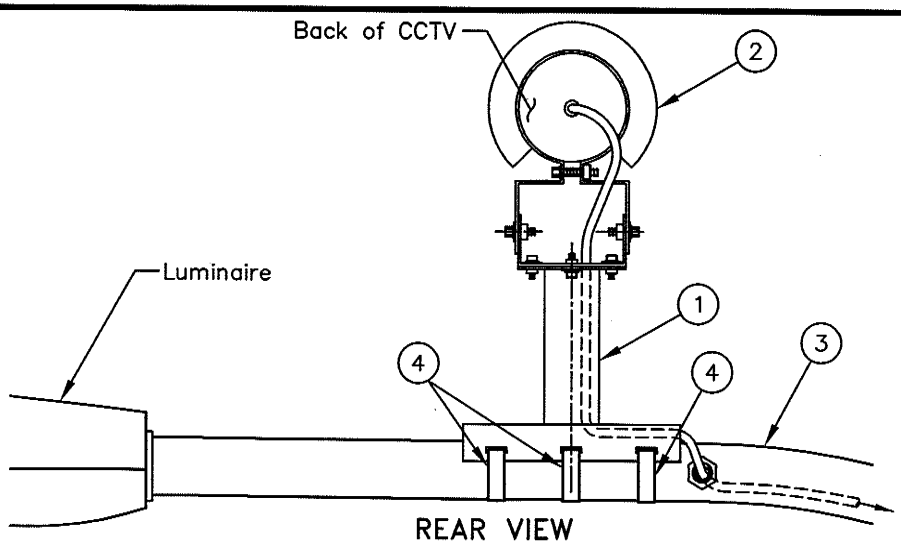

REAR VIEW
Not To Scale

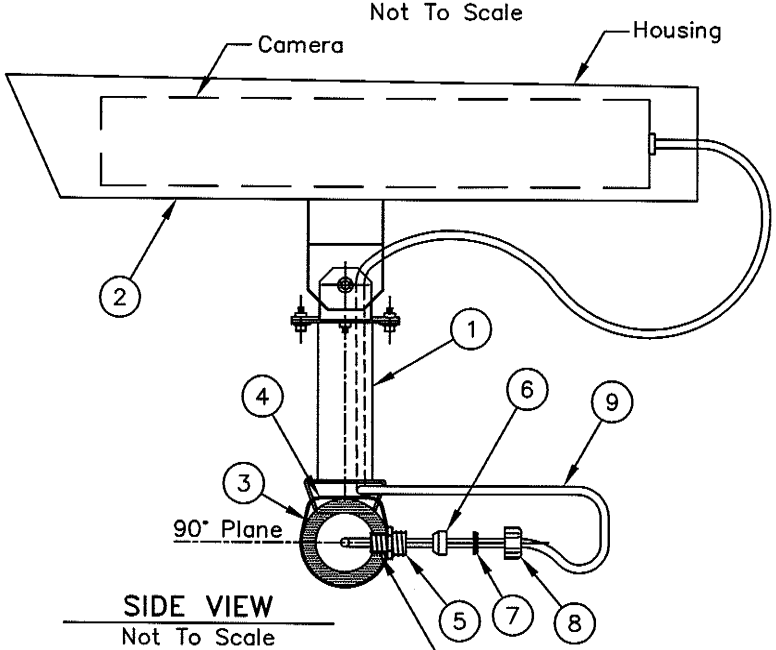

SIDE VIEW
Not To Scale

LIST OF MATERIALS		
Itm.	Qty.	Description
1	1	Camera Mount
2	1	Camera
3	1	Luminaire Mast Arm
4	3	Banding
5	1	Chase Nipple (Black Pipe)
6	1	Gasket
7	1	Plastic Washer
8	1	Bolt
9	1	CCTV Cable Per Manufacturer Requirements

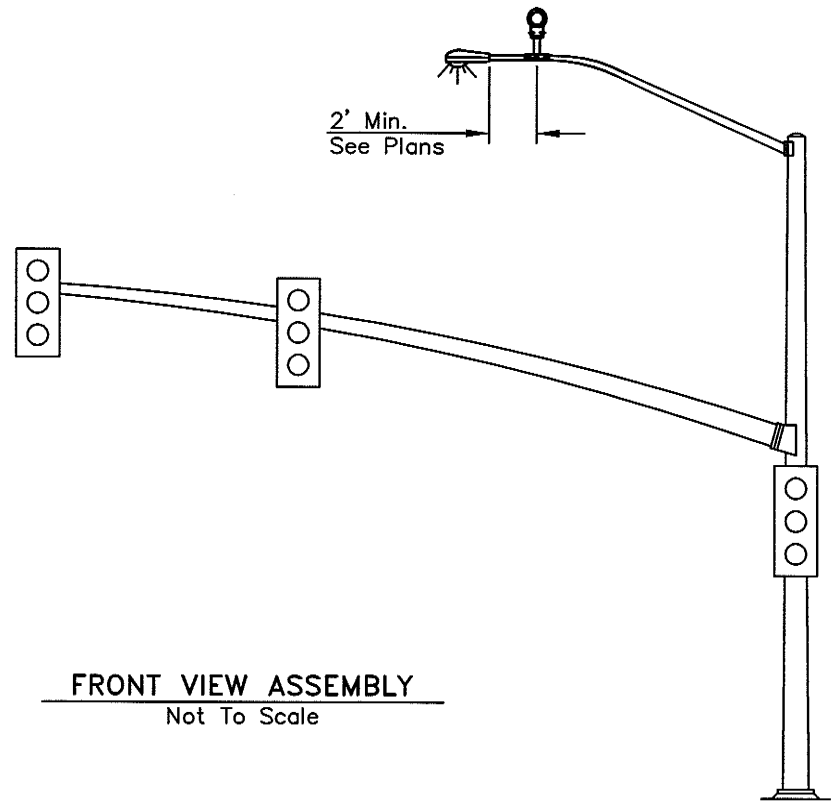

FRONT VIEW ASSEMBLY
Not To Scale

APPROVED FOR DISTRIBUTION:

9/9/2005

Keith E. Brann, P.E., Acting Town Engineer — Date

Registered Professional Engineer (Civil) — Certificate No. 38119 — SCOTT A. LESKA — Date Signed 9-9-05 — ARIZONA, U.S.A.

TOWN OF MARANA ARIZONA 1977

STANDARD DETAIL		DETAIL NO:
CAMERA AND MOUNT ASSEMBLY		730-1911
DATE: 9/9/05	REVISED:	SHEET 1 OF 1

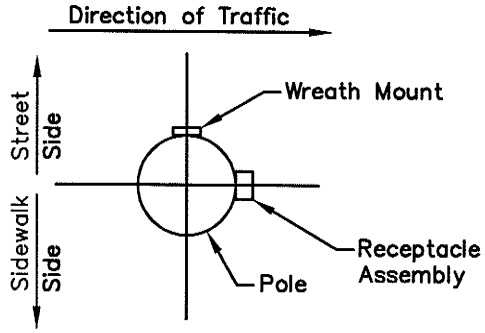

PLAN VIEW
SCHEMATIC ORIENTATION
Not To Scale

LIST OF MATERIALS			
Itm.	Qty.	Description	
1	1	Steel Receptacle Cover	Red Dot #CK MGV Or Approved Equal
2	1	Steel Receptacle Base	
3	1	Gasket	
4	1	Grounding Outlet, 2–Pole, 3–Wire 15 Amp–125 Volt Rated Capacity	
5	1	Outlet Box, Red Dot 14252 Or Approved Equal	
6	1	Wreath Mount	
7	1	Wreath	
8	3	Banding	
9	1	1" Chase Nipple (Black Pipe)	
10	1	Pole (See Plans)	

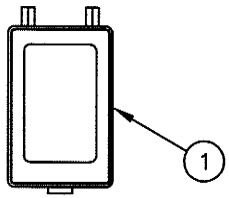

FRONT VIEW
Not To Scale

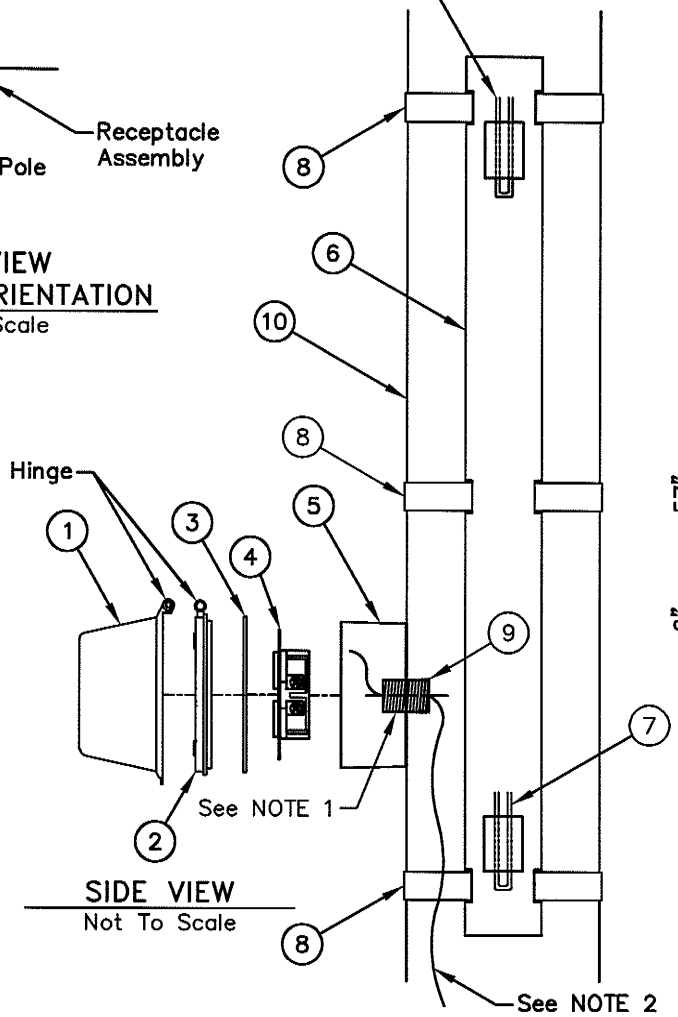

SIDE VIEW
Not To Scale

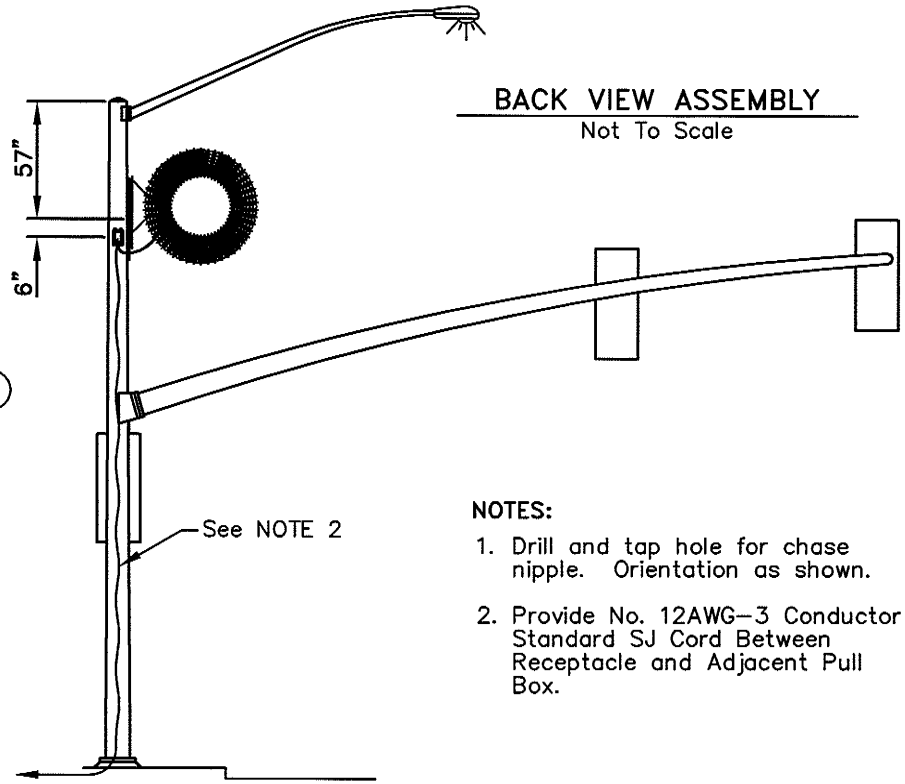

BACK VIEW ASSEMBLY
Not To Scale

NOTES:

1. Drill and tap hole for chase nipple. Orientation as shown.
2. Provide No. 12AWG–3 Conductor Standard SJ Cord Between Receptacle and Adjacent Pull Box.

APPROVED FOR DISTRIBUTION:

9/9/2005

Keith E. Brann, P.E.,
Acting Town Engineer

Date

Registered Professional Engineer (Civil) CERTIFICATE NO. 38119 SCOTT A. LESKA Date Signed 9/6 ARIZONA, U.S.A.

TOWN OF MARANA ARIZONA

STANDARD DETAIL		DETAIL NO:
RECEPTACLE AND WREATH MOUNT		730–1912
DATE: 9/9/05	REVISED:	SHEET 1 OF 1

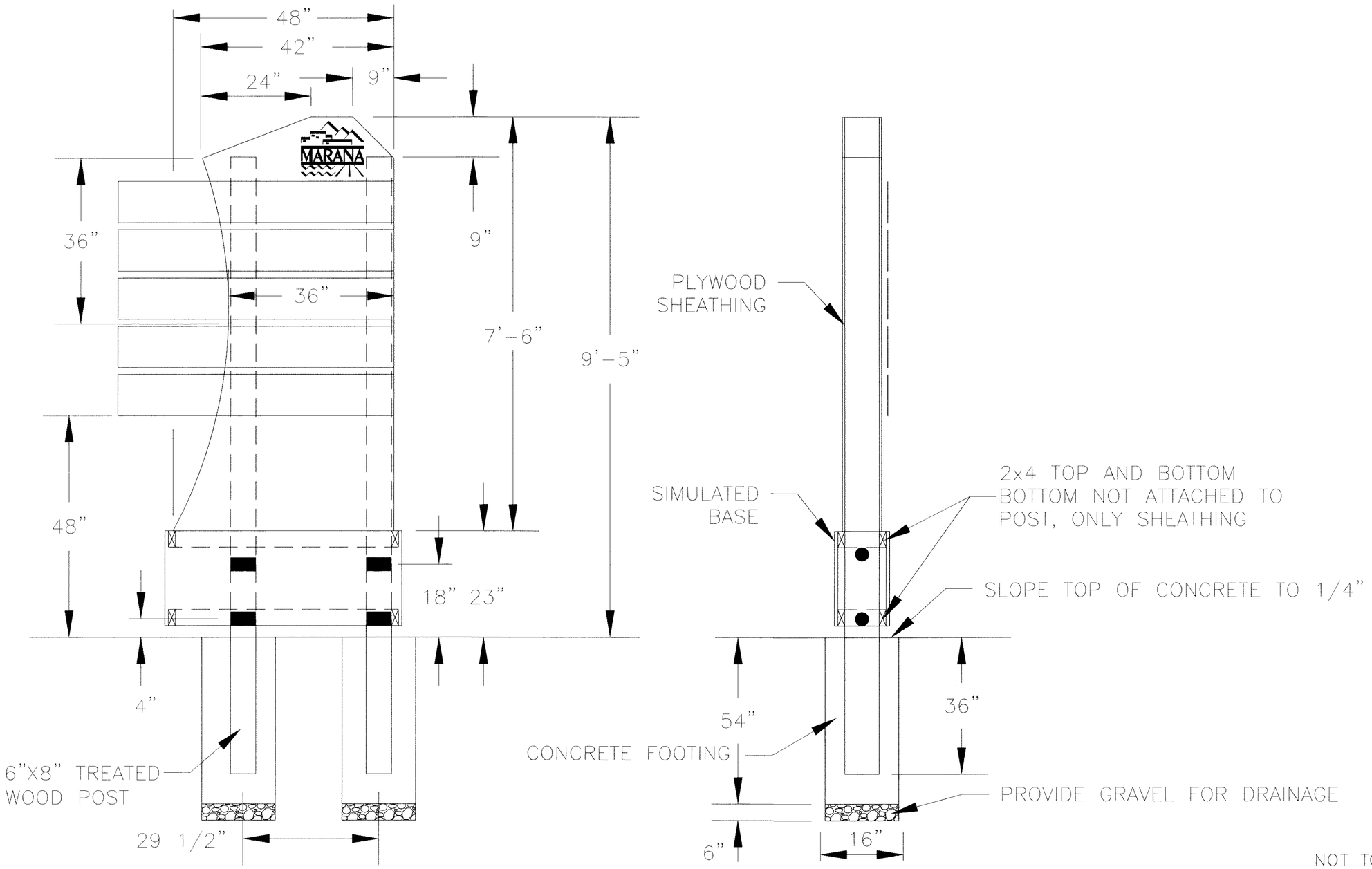

NOT TO SCALE

APPROVED FOR DISTRIBUTION:

Keith E. Brann, P.E.,
Town Engineer

Registered Professional Engineer (Civil)
CERTIFICATE NO. 43897
KELLY A. MORALES
Date Signed 03/28/11
ARIZONA U.S.A.
EXP. 03/2012

TOWN OF MARANA ARIZONA 1917

MARANA STREET STANDARDS		DETAIL NO:
WAYFINDING SIGN		740-1
DATE: 3/28/2011	REVISED:	SHEET 1 OF 2

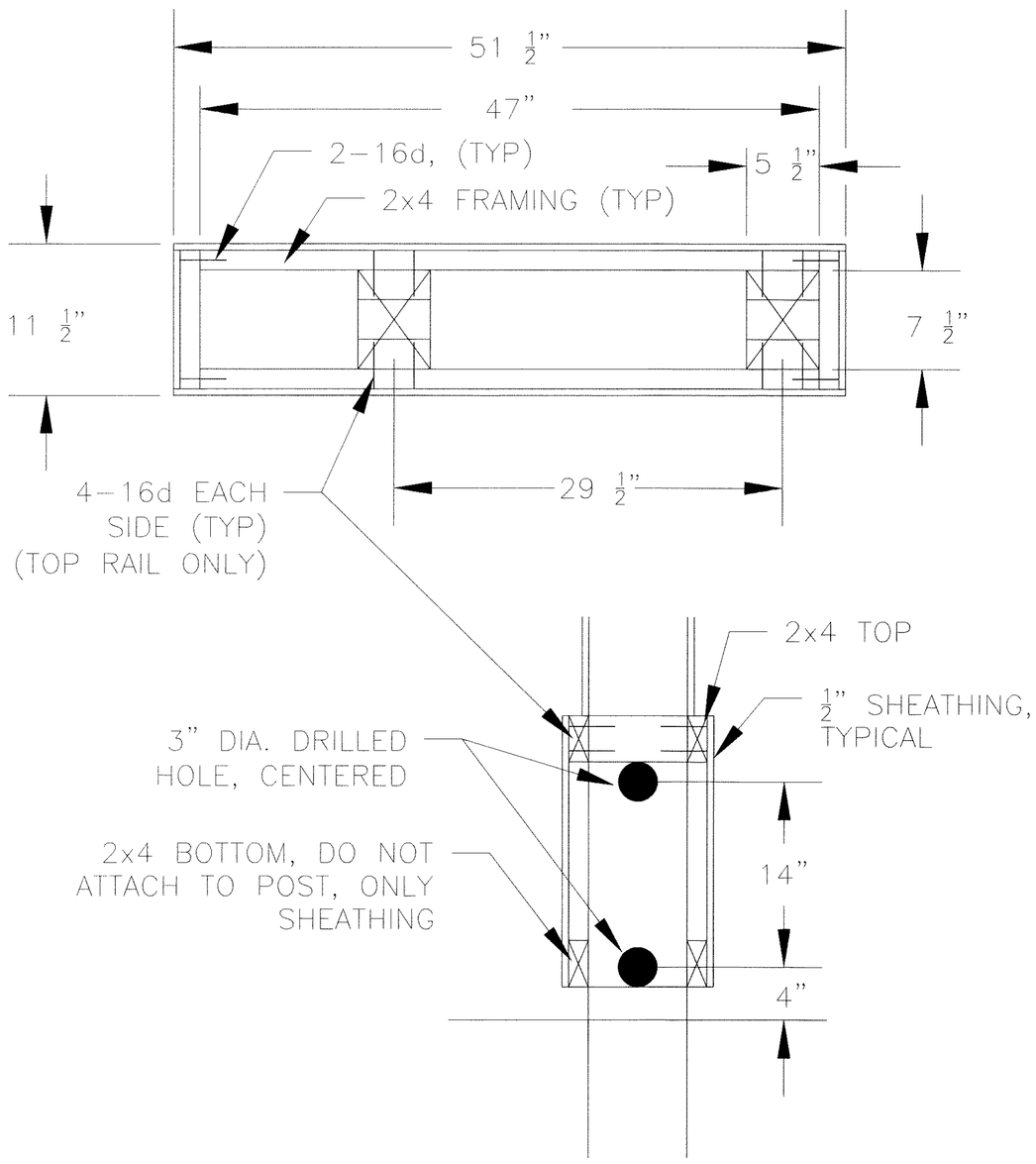

DESIGN NOTES

1. SHEATHING TO BE ½" EXTERIOR GRADE PLYWOOD
2. POSTS ARE 6"X8" D.F. NO 1 PRESSURE TREATED.
3. THREE INCH DIAMETER HOLES TO BE DRILLED PARALLEL TO SIX INCH SIDE OF POSTS PER DETAILS
4. SIGN PLATES ARE ALUMINUM SHEETING, RETROREFLECTIVE WITH MUTCD TYPE 6B LETTERING
5. SIMULATED BASE SHALL NOT HAVE ANY FIXED MOUNTING AT OR BELOW BREAK-AWAY HOLES
6. FRAMING FOR SIMULATED BASE SHALL BE 2x4 D.F. NO 2 PRESSURE TREATED LUMBER
7. CONCRETE STRENGTH, F'c=2500psi (SPECIAL INSPECTION NOT REQUIRED)
8. SOIL BEARING PRESSURE=1500psf, SOIL LATERAL BEARING PRESSURE=100psf PER 2006 IBC TABLE 1804.2
9. THE SITE DESIGN IS NOT CONSIDERED SUBJECT TO WIND SPEED-UP EFFECT, Kzt≤1.0 AS DEFINED IN SECTION 6.5.7.2 OF ASCE 7-05. ANY SIGN LOCATED WITHIN 125 FEET OF A 25 FOOT OR HIGHER HILL OR ESCARPMENT MAY BE SUBJECT TO SUCH EFFECTS AND SIGN REDESIGN WOULD BE REQUIRED. CONTACT ENGINEER OF RECORD IF SUCH EFFECTS ARE PRESENT. 1
10. PROVIDE GRADE SLOPE AWAY FROM BASE OF POLES.
11. IT IS RECOMMENDED TO REPLACE WOOD POSTS EVERY FIVE YEARS DUE TO NORMAL CLIMATE EXPOSURE
12. ALL NAILING SHALL BE PER THE 2006 IBC TABLE 2304.9.1
13. SIMULATED BASE SHALL NOT HAVE ANY FIXED MOUNTING AT OR BELOW BREAK-AWAY HOLES.

1 WIND FACTOR CLARIFICATION 03.28.11

NOT TO SCALE

APPROVED FOR DISTRIBUTION:

Keith E. Brann, P.E.,
Town Engineer

Registered Professional Engineer (Structural) CERTIFICATE NO. 43897 KELLY A. MORALES Date Signed 03/28/11 ARIZONA U.S.A. EXP. 03/2012

TOWN OF MARANA ARIZONA 1977

MARANA STREET STANDARDS		DETAIL NO:
WAYFINDING SIGN		740-1
DATE: 3/28/2011	REVISED:	SHEET 2 OF 2