Restore a Vintage Sewing Machine

Chatterbox Quilts

Unloved and Unappreciated:
Finding the Hidden Value in Vintage Sewing Machines

Table of Contents

Before You Begin

Safety & Tools

Before starting the restoration of an older machine there are some safety issues that you should be aware of:

- Restoring a machine will put you in contact with sources of electrical power, sharp edges, and messy solvents. Please ensure you take the necessary precautions to ensure you do the restoration in a safe manner. Your work area should be well ventilated.
- If a component is not working and you don't feel comfortable repairing it – save yourself some trouble and take it to a repair shop. Most repairs are fairly straightforward but it is no use risking an accident or damage to the machine.
- Lubrication is a big part of restoring a machine, however it is important to know the difference between where to apply oil and where to apply grease. Generally, grease goes on gears, oil goes anywhere else that needs lubrication. Never put oil in the motor or on the gears!
- Restoration can be messy so make sure you dress and work in an area that can handle the stains that will inevitably occur.
- Unplug your sewing machine from the wall socket before doing any work on it.

Tools & Equipment

The tools that you need to restore your vintage sewing machine are really quite simple and are ones that you probably already have. One of the most valuable tools is the sewing machine's manual. It shows you how the machine goes together, how to oil it, how to wind a bobbin, and most importantly, how to use it! If the manual wasn't included with your sewing machine, download it from the internet and print it out.

Small Tools

A few small tools will make the restoration go much smoother:

- Small flashlight to shine extra light into dark areas, and illuminate tiny places where conventional lights won't be able to reach.
- Magnifying glass for checking the interior parts.
- Reading glasses: if you need these, make sure you have them on.

- Small paintbrush for cleaning out lint from the bobbin or shuttle area and anywhere else you may find it.
- Small screwdriver. You may have a SINGER® screwdriver with your machine and this will work perfectly. If you don't have a screwdriver with your machine, a standard 3mm wide flat-head screwdriver will work. **SPECIAL NOTE: For owners of SINGER® sewing machines with bentwood cases: if you don't have the key for your case you can use a 3mm flat-head screwdriver as a makeshift key.**
- Syringe to distribute the oil around the machine. A metal syringe works well for getting the oil into the smallest of areas. I got mine from Lee Valley.
- Bowl or plate to house any screws, nuts, feet, plates etc., that you remove from the machine during the course of your restoration. Put a cloth or piece of batting in the bottom of the bowl or buy a mechanic's magnetic bowl from a car parts store so that metal parts don't move around too much and get lost.
- Tweezers – Long angled tweezers are very handy for pulling out stray bits of thread from the bobbin area or elsewhere on the machine!

Tools & Cleaners

Work Surface

A good sized stable work surface is important to ensure that you can work safely and effectively, especially if you are working on a portable machine. Put an old towel underneath the sewing machine to cushion it and provide a blotter for any oil that may drip out. Sometimes you need to tip the machine onto its side, so you need a soft surface so the machine doesn't get scratched. The towel also prevents your surface from being scratched by the machine.

If you have a portable machine that flips up from its wooden base, like a 99K or a large cabinet model that you don't want to take out of the cabinet to work on, such as a 15-91, have a pile of

Cleaning Your Machine

TLC

Before starting, place your sewing machine on an old towel on a stable surface. Lay out all the tools and cleaning products that you'll be using, ensuring you have lots of Q-tips, pipe cleaners, cloths, and paper towels. Make sure you're dressed appropriately because this can get messy. No pearls and high heels for this part of the process! It is also a good idea to have shoes on when doing this in case you drop something on your foot – ouch! Be sure there is adequate ventilation when using cleaning products or wear a respirator if you are sensitive to these types of products.

If you're unsure about using a product, test it on an inconspicuous area of the machine and check the results before continuing. If you have several different machine models, what works on one may not work on another, especially if they are different colours.

Getting Started

The first thing to check when getting started is to ensure that your machine is unplugged from the wall socket before doing any cleaning. It is best to clean the mechanical parts on the interior of the machine first, then the sewing machine body, and then do the metal pieces to avoid smearing them with oil just after cleaning them.

Start by removing any thread from the machine. Remove the spool of thread and the bobbin. If you have a bobbin case that can be removed or a shuttle, take this out of the machine too. Take off the needle and dispose of it properly. I like to put my used needles and pins in an old vitamin bottle so no one gets picked by needles in the garbage.

Remove any metal parts prior to cleaning. It is usually possible to remove the faceplate on the machine and the needle plate relatively easily so that you can clean them separately. Remove the foot that is on the machine, the needle bar screw, and the cutter, if possible. Lay them out on the towel, away from the machine body. Place any screws or small parts in the bowl that you have by you. If you can't remove the metal part you will have to clean it in place but be careful to avoid getting metal polish on the machine body as it can scratch the finish.

If you are having problems with screws not turning, soak them and the area around them with sewing machine oil or Tri-Flow Superior Lubricant and let it sit for awhile, then try again. Usually these are stuck after years of storage and just need a little oil to loosen them up.

Cleaning

The machine may be dusty or have marks on it that can be easily removed. Wipe it down with a damp microfiber cloth. You can use some warm water and dish soap, just be sure to wring the cloth out well – we're talking damp, not wet here. We don't want to get any extra moisture into the machine. If you used dish soap, clean it off the machine with another damp cloth, then wipe the machine body dry. Now you can take a look at it and see where you'll need to spend more time cleaning it.

Bobbin Area

The bobbin area is beneath the needle bar and the presser foot. Remove or open up the needle plate or slide plates, remove the needle and needle bar and take out any lint or stray threads. Also check the bobbin area for stray threads. A strong light and maybe even a magnifying glass might be needed here. Be sure to move the balance wheel toward you when checking the bobbin area, so you get a view of the entire area. I typically use a small paintbrush to clean out the bobbin area.

If you see a piece of red felt inside the bobbin area, do not remove it! It isn't lint, but an area where you will be applying oil after the machine has been cleaned.

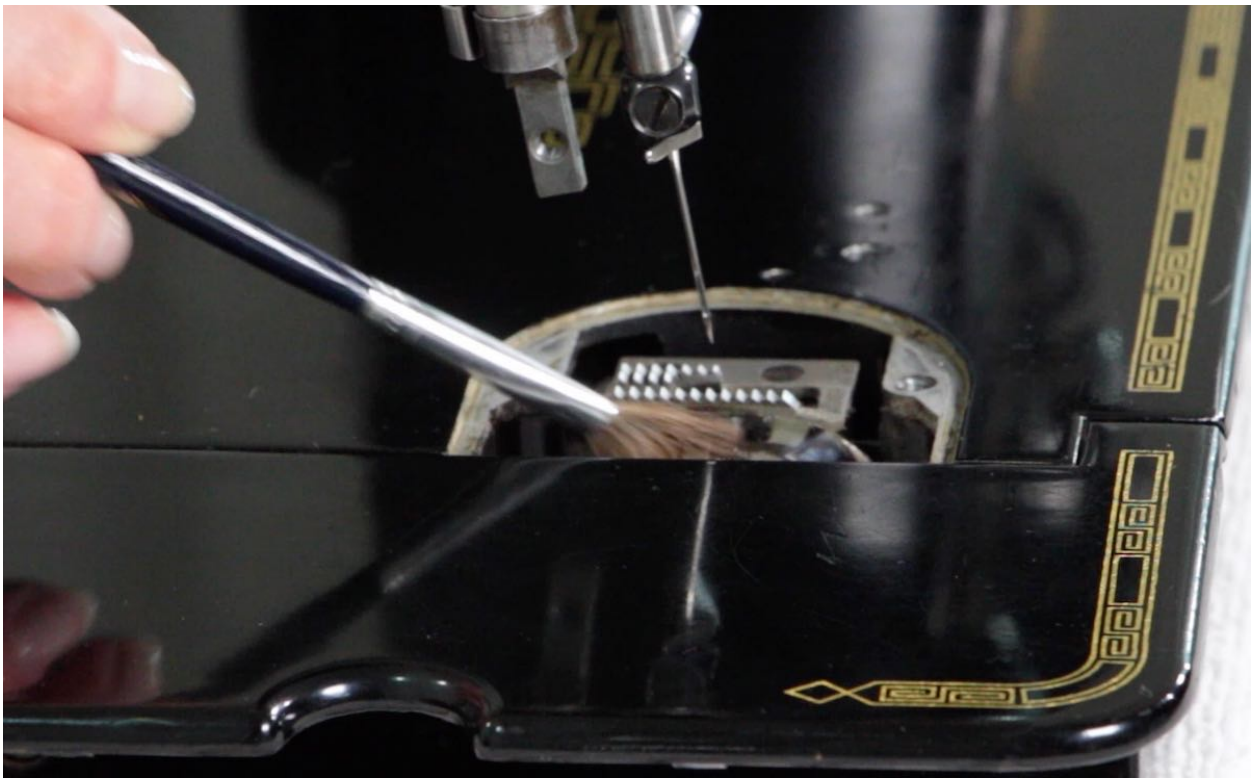

Bobbin Area

Oiling Your Machine

Thirsty Machines

You've cleaned the machine. Now you need to oil it. This is one area where vintage machines differ from modern ones: they're thirsty and need to be oiled on a frequent basis. You'll get used to this and it will soon become part of your regular machine maintenance.

Oil Your Machine

You should use good quality sewing machine oil to oil your machine such as Tri-Flow Superior Lubricant. The straw that comes with it makes it easy to get at all the small areas that need oiling. You don't need to apply a lot of oil to your machine – a drop or two will suffice. You're just trying to oil your machine, not drown it!

Refer to the manual to see all the areas that need to be oiled, keeping in mind that you should oil anywhere in the machine where there is movement or where two parts move against one another. If you have a red felt piece in the bobbin area, this also gets oiled. It is a good idea to have a paper towel underneath the area where you're oiling to avoid drips as much as possible. Plug your machine back in so you can run it to get the oil through the machine, preferably with the machine unthreaded and with the needle removed.

After you've finished oiling the machine, you'll want to wait a bit before sewing with it to avoid getting oil on your project. Put a paper towel underneath the needle bar and presser foot, leave

Cleaning and Restoring the Cabinet

Big Results for Small Effort

Now that the sewing machine is in good shape, it is time to turn your attention to the case or the cabinet. If the machine cabinet or case is wood, it probably needs some attention as there will typically be scratches and wear on them. I'm sure you'd rather be sewing than stripping down a cabinet and completely refinishing it. Luckily, there are products available to bring back the wood colour and provide a protective finish to the cabinet or case without the work or time involved in a complete restoration.

Restoring a cabinet with a lot of damage is a complicated and time-consuming job. Most cabinets just need a little touch-up to remove stains or hide scratches. Anything more than that is probably not worth the effort unless furniture restoration is a hobby of yours and you are willing to put in the time consuming work that this involves.

Restoration & Protection

You'll need several items to work on restoring the finish on the case or cabinet. You'll need several cotton or microfiber cloths, 0000 steel wool, rubber gloves and a protected work surface. Again, make sure you have good ventilation when using these products or use them outdoors. If you are sensitive to chemicals, a respirator would be a good idea. I've had good success using Howard Products to rejuvenate my cases and cabinets. Their Restor-a-Finish will bring back the colour to the wood, while their Feed-N-Wax provides lustre and a protective coating to the restored wood.

Howard Products

Repairing Your Machine

Simple But Effective Repairs

Some of the machines that you encounter when you are shopping for your vintage SINGER® sewing machine are going to need repairing. These machines are often the best deals because most people are reluctant to spend the effort to repair them: they want a machine in perfect working order. Vintage sewing machines are mostly mechanical and are very close to bullet proof so even one that looks like junk can often be rejuvenated with a few simple repairs.

I'm not a sewing machine repair person or an electrician, but there are still many things I do to bring my vintage purchase back to better operation. Although I enjoy restoring my machines, I am buying them to sew with, so I buy machines that take a minimum of effort to get them back to working order.

This chapter describes some of the simple repairs that are typically needed to rejuvenate your vintage sewing machine. These repairs can easily be done at home with some simple tools that you probably already have. You will not learn how to disassemble the whole machine and rebuild it from scratch. That kind of work is probably best left to the repair experts.

Safety

Before starting your repairs there are some safety issues that you should be aware of:

- Repairing a machine will put you in contact with sources of electrical power, sharp edges, and messy solvents. Please ensure you take the necessary precautions to ensure you do the restoration in a safe manner.
- If a component is not working and you don't feel comfortable repairing it – save yourself some trouble and take it to a repair shop. Most repairs are fairly straightforward but it is no use risking an accident or damage to the machine. If you are not comfortable making a repair then it probably better to take the machine to a repair shop or wait until another machine requiring less repair is available.
- Unplug the sewing machine from the wall socket before doing any repairs.

Replace Bobbin Winder Tire

One of the more obvious areas that need repair on a vintage SINGER® sewing machine is the bobbin winder tire. These often become hard and cracked over time. The good news is that it is also an easy repair. As with the spool felt and drip pad, you can order a new bobbin winder tire online. They are inexpensive, so order a spare or two, just in case.

All you have to do is remove the existing bobbin winder tire. Usually you can slide these off the bobbin winder using your fingers or some pliers, but occasionally you have to cut it to get it off. To replace it, just roll the new bobbin winder tire on and you're done.

Bobbin Winder Tire Replacement

Replace the Wiring

Replacing the wiring is probably the most technically challenging repair that an owner might consider doing themselves. This section gives shows some of the wiring repairs that you may want to consider completing if your machine needs them.

Damaged wiring is probably the most obvious deficiency you will encounter when looking at an older machine that has not been restored. The advanced age of these machines means that the exterior covering on the wires has often become brittle and may even have been broken off. You'll be able to see the bare wires inside. Because this kind of damage is so obvious it is usually reflected in the price, so you can often get a really good deal if wiring is damaged on a machine. Remember, don't plug in and turn on a machine with bare wires showing as there is a risk of electric shock.

In this segment I just want to demonstrate that it is relatively easy to replace the wiring if you are careful. I'll show you how I replace the wires but I am not going to show all the details.

There are many Youtube videos that go into great detail on how to replace the wiring. **I am not an expert so I recommend you do your own research before you attempt this type of repair.** If you do not feel comfortable working on the electrical parts of your machine, then take it to a qualified electrical repair shop. If you are willing to repair or replace the wiring, then you should be comfortable purchasing a machine that has damaged wiring.

Tools & Materials

Here are the tools and materials that you are going to need:

- Replacement Wire – 18/2 gauge wire – 2 stranded wire, 18 gauge thickness should work. The wire needs to be heavy enough to carry the electrical load, yet thin enough to fit inside the machine.
- Screw drivers, pliers, wire cutters and crimpers.
- Connectors – ring terminals.
- Bowl or magetic mechanic's bowl for screws and small metal parts

Areas That Typically Need Repair

There are three major wiring bundles on a typical vintage sewing machine: wires for the machine and lights, wires to connect the power source, and wiring for the foot pedal or knee controller. The Classic machines usually have these wires in full view or tucked into the cabinet. in the more recent Transitional machines some of this wiring is internal to the machine. Usually the only wiring on a Transitional machine that may need repair is the power cable.

Wiring that needs repair is fairly obvious because the outer layer (the insulation) has become brittle and will peel off in your hands. You may encounter a small repair such as a cut in the insulation where it will be possible to repair the small break with heat shrink tubes/sleeves, but often the wire is so degraded that it is just better to replace the wiring. If the motor is itself is damaged then you will either have to have it professionally repaired or buy a replacement. It is possible to try to repair the motor yourself, but it is not a task to take on lightly.

Power Source Wiring Repair

Let's step through the process of fixing the power source wiring using the SINGER® 128 that we restored. The original power cord on the SINGER® 128 had been damaged and repaired with electrical tape. The wires were bare in places and it was clear that the whole wiring bundle need replacing.

Step 1 - Remove the portion of the terminal block that is connected to the power cord. This

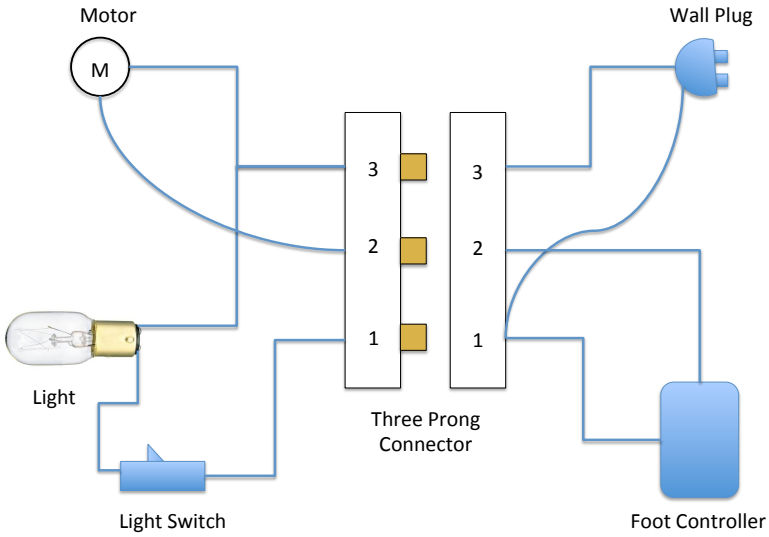

block is located on the rear of the machine and is the connection that provides power to the machine and also provides the control connection for the foot pedal or knee bar.

Maintaining Your Machine

Routine Maintenance

Once your sewing machine is repaired and running you need to keep it in good condition. The best thing you can do for your vintage sewing machine is to use it! There is not much maintenance to do on these machines other than to oil them, apply grease occasionally, and polish them to keep them looking good.

Oiling

Routine oiling of your machine is much less effort than what you may have had to do when you restored your machine. You only need to add a few drops on a regular basis or if your machine starts to feel stiff. Consult your manual for the location of the areas that need oiling. I use Tri-flow Superior Lubricant to oil my SINGER® sewing machines but you can use any good quality sewing machine oil. In general, apply a drop or two of oil to any place where two parts move together. Don't forget that some machines also have moving parts underneath the bed of the machine that need oiling. When you've finished oiling your machine run it at speed for about 2-3 minutes, to work the oil in, and then it's ready to sew.

Oiling the SINGER® 128