VirGIL: A Demand Response Platform for Smartgrids

Spyros Chatzivasileiadis, Javier Matanza, Marco Bonvini, Rongxin Yin, Thierry Nouidui, Zhenhua Liu, Emre Kara, Rajiv Parmar, David Lorenzetti, Emma Stewart, Michael Wetter, and Sila Kiliccote

Lawrence Berkeley National Laboratory, CA, USA

Objectives

- Develop a *modular and efficient* co-simulation platform
- Capture the interactions between building dynamics and power systems for real-time grid operation and planning
- Integrate legacy tools to decrease the barriers for adoption to the industry (e.g. DigSILENT Powerfactory)
- **Build the foundations for a real-time demand response tool**

Motivation

- Most demand response tools focus either on the grid (neglecting building dynamics), or on the buildings (neglecting their impact on power flows)
- Distribution system operators need tools that they can *seamlessly integrate* with their simulation platforms to control DER and deploy Demand Response
- Modular architecture based on open-standard → integrate future tools; e.g. EV simulation, optimization, PV inverter control, Hardware in the Loop, etc.

VirGIL Co-simulation Framework

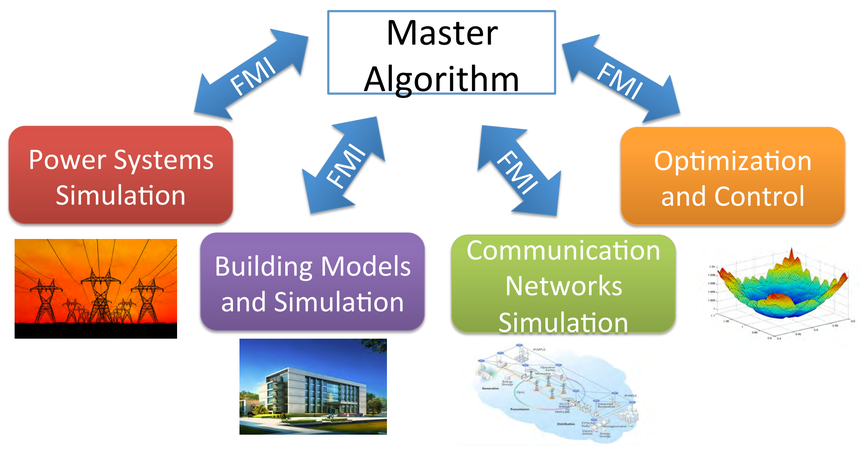

Implementing Demand Response For Buildings in VirGIL

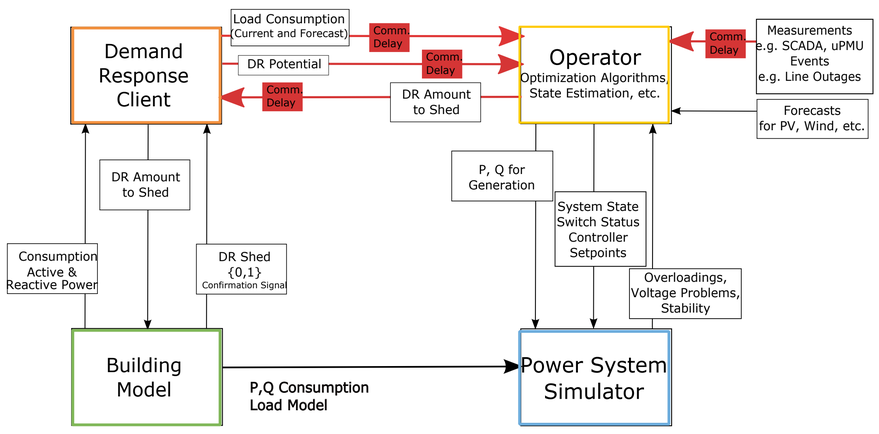

FMI: Functional Mock-up Interface

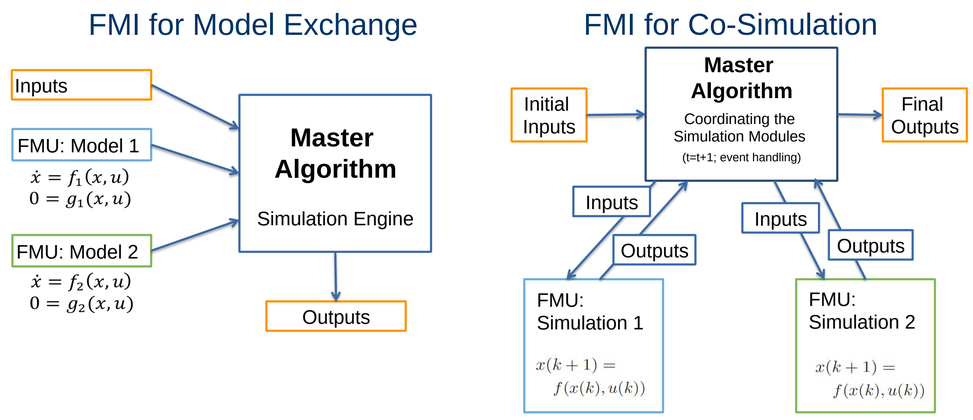

Power FMU and Communications FMU

Power FMU

- Powerfactory requires Windows. The rest of our tools operate on Linux.
- Developed a Python interface between Powerfactory API and the FMU
- FMU development in C

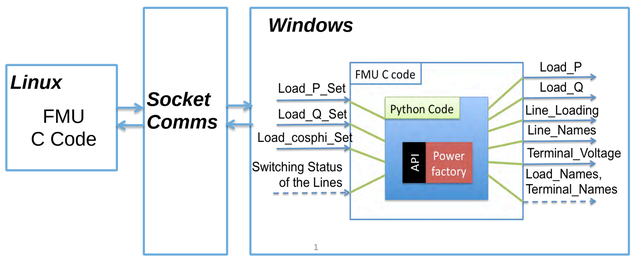

Communications FMU

- Modeling the OpenADR Framework

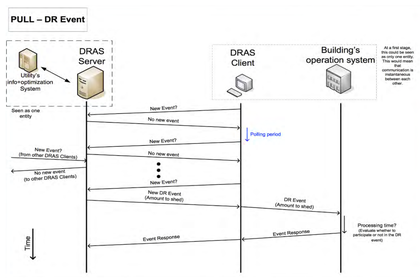

VirGIL in Ptolemy (Master Algorithm)

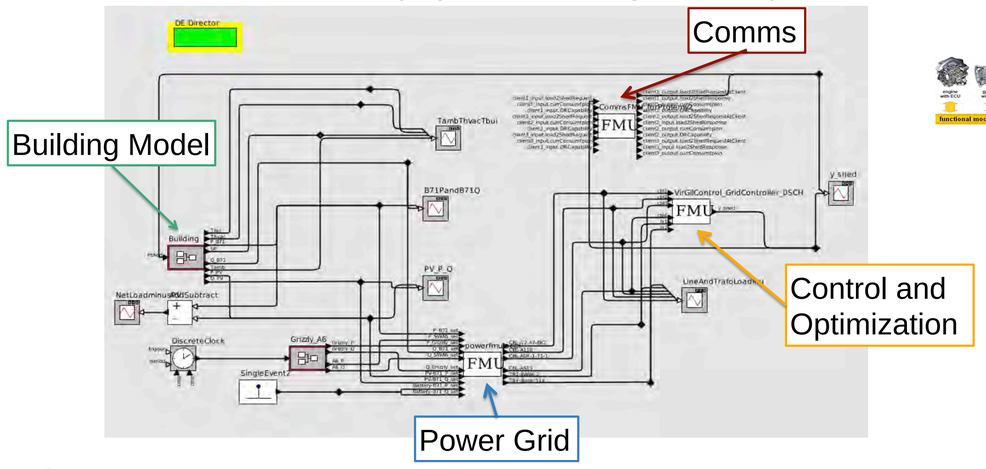

Quantized State System Simulation (QSS) reduces the work needed to integrate the system

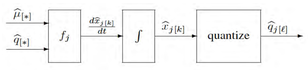

- QSS decouples slow and fast dynamics
- After a state quantization, each FMU shares individual state components with the rest of the system: cuts communication and computation costs between FMUs
- State events can be handled without iteration, leading to efficient execution.

Building Modeling and FMU

- VirGIL needs a building model that captures all the relevant dynamics, but without placing an undue burden on the solver

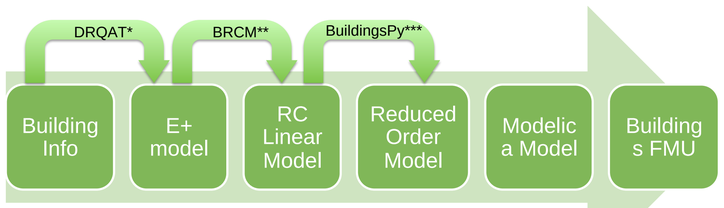

•*DRQAT: Demand Response Quick Assessment Tool, LBNL.
•Using prototypical building models, it converts building information to EnergyPlus models.
•**BRCM: Matlab Toolbox developed by ETH Zurich.
•Facilitates the physical modeling of buildings in R-C equivalent models.
•***BuildingsPy: LBNL tool for workflow automation

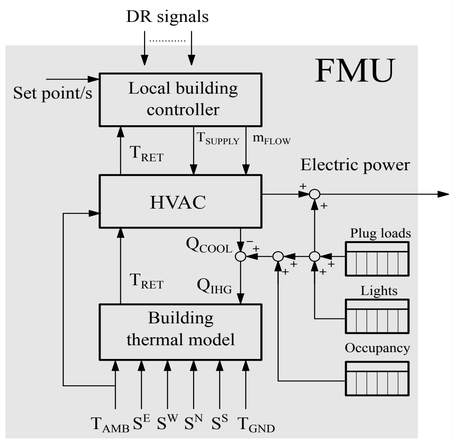

Use Cases

Case #1: Demand Response to Reduce Cable Loading

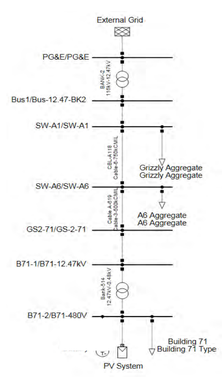

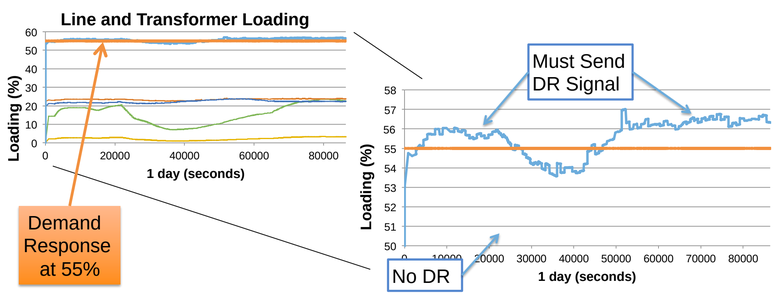

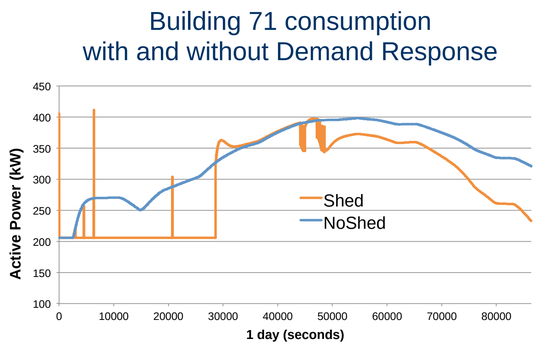

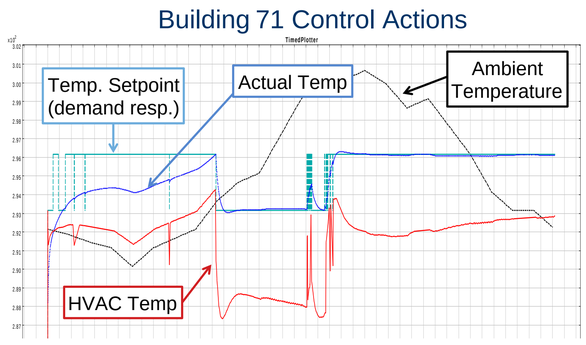

Case #2: Volt/Var Control with Battery and micro-Synchrophasors

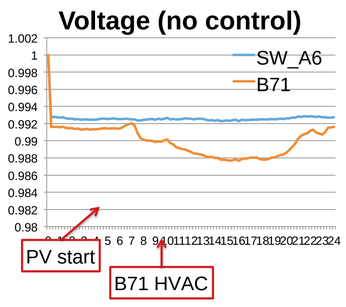

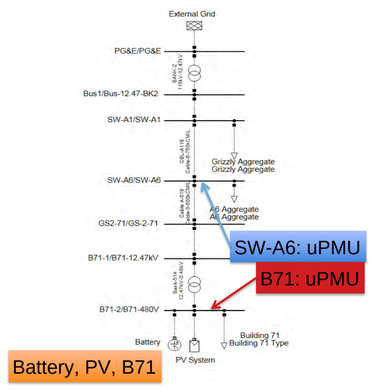

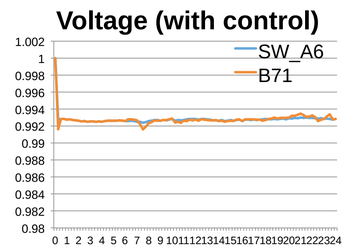

For more Information:

[1] S. Chatzivasileiadis, J. Matanza, M. Bonvini, R. Yin, T. Nouidui, Z. Liu, E. C. Kara, R. Parmar, D. Lorenzetti, M. Wetter, and S. Kiliccote. VirGIL: A co-simulation platform for cyber-physical modeling of distributed resources for distribution system operations. *Proceedings of the IEEE*, 2015.submitted.[Online]: http://arxiv.org/pdf/1505.00078v1.pdf

Lawrence Berkeley National Laboratory
Energy Technologies Area

Contact: schatzivasileiadis@lbl.gov
Grid Integration Group