BAJA™

MODEL # 2104
WATERLESS NO-FLUSH URINAL

EcoTrap® Inside!

APPLICATION
- Commercial and Residential Use

FURNISHED WITH
- Two unit integrated wall hangers
- AllFlange™ slots for flange bolts
- Fastening hardware
- Gasket
- **Two EcoTraps®**, vertical trap design

NOTE:
- Adequate BlueSeal® trap liquid to be provided for EcoTrap® of urinal, not furnished.

COLORS
Standard white; other colors available

WARRANTY
3 Year Limited Warranty.
Supply owner with warranty card

1991 - 2016
25 *years of* RELIEF FOR THE WORLD
WATERLESS

WATERLESS CO. INC. 800.244.6364

In keeping with our policy of product improvement, Waterless Co. reserves the right to change product specifications at any time without notice. ***It is the responsibility of the specifier, installer and wholesale seller to confirm specification at time of sale or installation.*** *No responsibility is assumed, claimed or accepted by Waterless Co. Inc.*

DESCRIPTION
Waterless Co. Inc. No-Flush™ urinal Model #2104 Baja™, wall hung, made of Vitreous China material (VC) **for commercial and residential use.** Urinal to have elongated rim, a full 2" ceramic interior drain and 2" flanged waste outlet; suitable for direct connection to a 2" waste at the wall . Supplied EcoTrap® insert required. Trap insert to be of a vertical flow type with 360 degree perimeter openings and installed by press fit. Trap must be replaceable and refillable. Trap inserts are to be removed with a two pronged heavy duty stainless steel tool. Urinal to be fastened at the bottom front using standard bolts from brass urinal flange. The bottom of the urinal is to be fully enclosed.

DIMENSIONS (WxHxD)
14.0 x 21.5 x 14.5 inches (356 x 546 x 368 mm)

APPROX. WEIGHT
29 lbs (13.18 kg)

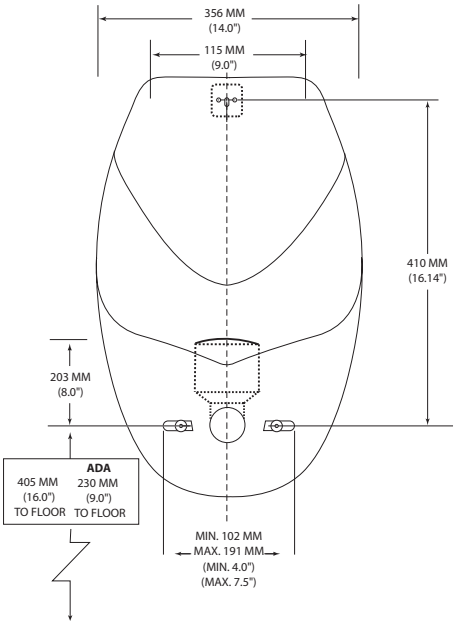

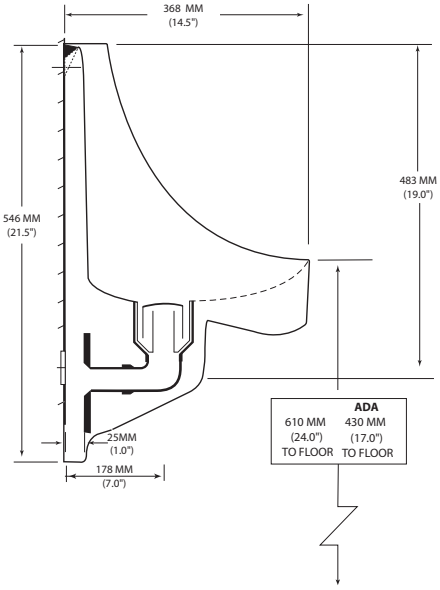

CODES/STANDARDS APPLICABLE: Complies with A117, ASME A112.19.19, others.

FOR STANDARD INSTALLATION: mount at 24" above finished floor to lip of urinal or as required by architect. Center drain line to be at 16.0" off finished floor.

FOR ADA REQUIREMENTS: mount at 17" above finished floor to lip of urinal. ADA center drain line to be at 9.0" off finished floor.

Supply suitable wall support, i.e. carrier. Install and maintain as per manufacturer's instructions. Urinal 2" drain outlet installs and drains to 2" flanged waste. Retrofit or new construction. Use standard sanitation practices to maintain fixture.

NOTE:
Urinal is predrilled to accept most 2" brass flanges from other manufacturer's urinals in a retrofit scenario. On site custodial training is to be provided by the manufacturer or their representative. Certificates of training are to be issued and forwarded to the owner.

WATERLESS.com
the innovative brand since 1991

© WATERLESS CO. INC. 0117