STUDIO
MIEKE
MEIJER

Studio Mieke Meijer
T: +31 (0)6 11 25 43 54
E: info@miekemeijer.nl

SPECIFICATION SHEET - BALANCE - DESK TASK LIGHT

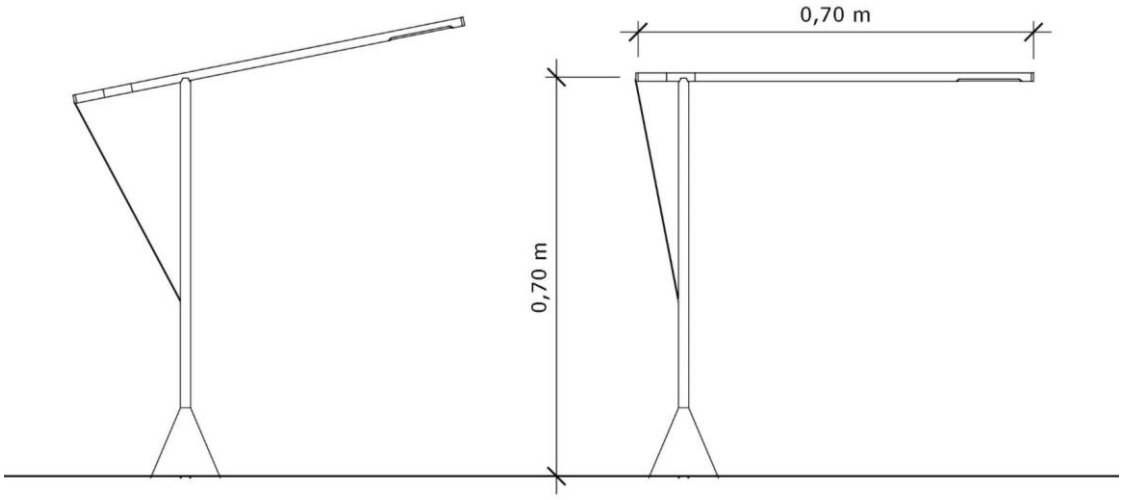

DETAILED INFORMATION

Voltage 110v - 220v
Usage indoor

LED	4W, 300-350lm, COB led, 2700K, beam light 120 degrees non dimmable, 12,0 x 1,0 x 0,3 cm
Driver	Input – 9,5V to 265V AC or 130V – 374V DC, Output - 12V DC, 350 mA, CE Plug to customer specification and national standards
Materials	Copper or Brass, cast iron, rubber, braided electricity cord. stainless steel PU coated wire
Colours and finishes	Base - Cast black iron Fixture – Polished brass/copper or oxidized brass Wire – Black PU coating
Size and Weight	Fixture 70x70 cm Base ⌀12x12 cm Braided electrical cord 3m Total weight 6 kg

STUDIO
MIEKE
MEIJER

Studio Mieke Meijer
T: +31 (0)6 11 25 43 54
E: info@miekemeijer.nl

SPECIFICATION SHEET - BALANCE - FLOOR LIGHT

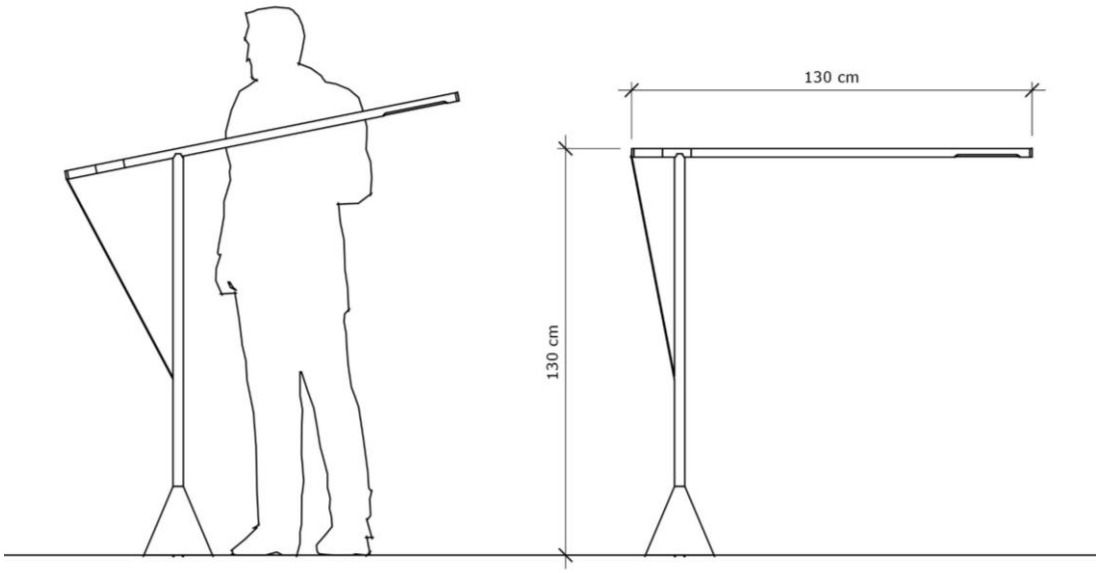

DETAILED INFORMATION

Voltage 110v - 220v
Usage indoor

LED	LED strip 240 led/m 19,2W/m , 1400lm/m, 4100K, non-dimmable, 60 x 1 x 0,3 cm
Driver	Input –110 – 220V AC, Output - 24V DC, 30W, CE Plug to customer specification and national standards
Materials	Copper or Brass, cast iron, rubber, braided electricity cord. stainless steel PU coated wire
Colours and finishes	Base - Cast black iron Fixture – Polished brass/copper or oxidized brass Wire – Black PU coating
Size and Weight	Fixture 130x130 cm Base ⌀22x22cm Braided electrical cord 3m Total weight 40 kg

STUDIO
MIEKE
MEIJER

Studio Mieke Meijer
T: +31 (0)6 11 25 43 54
E: info@miekemeijer.nl

SPECIFICATION SHEET - BALANCE - EXTRA LARGE FLOOR LIGHT

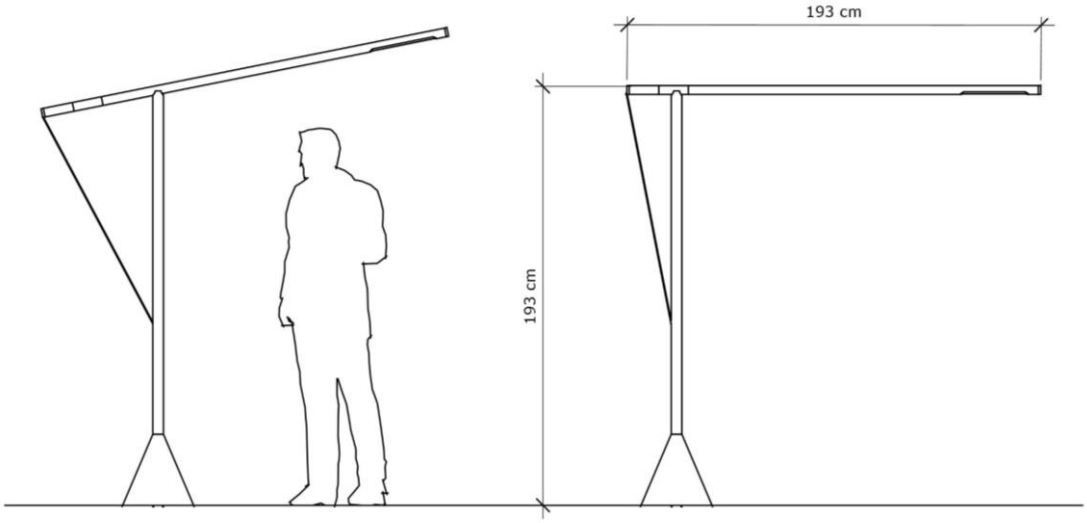

DETAILED INFORMATION

Voltage 110v - 220v
Usage indoor

LED	LED strip 240 led/m 19,2W/m , 1400lm/m, 4100K, non-dimmable, 100 x 1 x 0,3 cm
Driver	Input –110 – 220V AC, Output - 24V DC, 30W, CE Plug to customer specification and national standards
Materials	Copper or Brass, cast iron, rubber, braided electricity cord. stainless steel PU coated wire
Colours and finishes	Base - Cast black iron Fixture – Polished brass/copper or oxidized brass Wire – Black PU coating
Size and Weight	Fixture 193x193 cm Base ⌀30x30cm Braided electrical cord 3m Total weight 70 kg