Onground Steel Kit
Layout Specifications

Copyright © **Megna Plastic Packaging Corp**. Version 5.1**b**

MEGNA POOLS

DECAGON 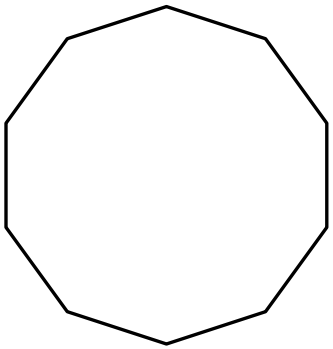 DC	GRECIAN GR	OCTAGON 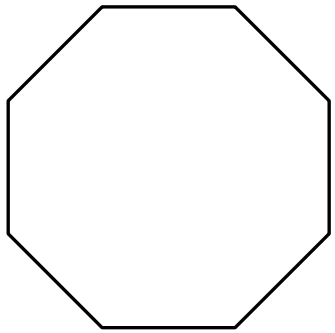 OC
MONNARCH 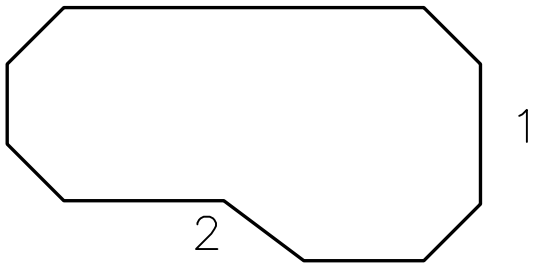 MO	OVAL 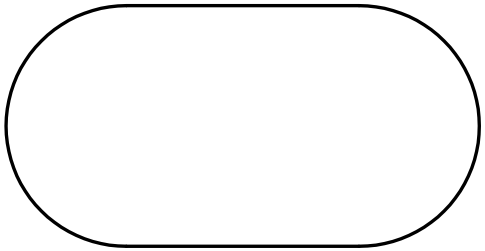 OV	ROUND 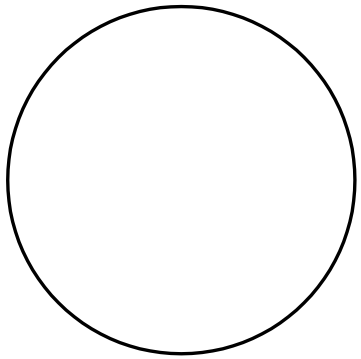 RD

STAND AT 1 AND SAY WERE 2 IS.

LEFT HANDS SHOWN

Updated 2010/02/02

MEGNA POOLS

Megna Plastic Packaging Corp.

SIZE:	SHAPE:	HAND:	DWG#
25'-11" x 24'-7"	DECAGON	N/A	26FT A

PER.:	80'	S.A.:	492.43 ft²	VOL.:	0.00 gal.us
PER.:	24.38 m	S.A.:	45.75 m²	VOL.:	0.00 liters

DATE: 21/01/2010 | APPROVED:

DRAWN BY: BCC

ALL DIMENSIONS ARE FINISHED

MANUFACTURING NOTICE

1- DUE TO UNCERTAIN GROUND VARIANCES POOL WALLS MUST BE INSTALLED A MINIMUM OF 6 INCHES BELOW GRADE
2- BUTTRESS SUPPORTS MUST BE FULLY SUPPORTED INCLUDING SONO TUBES BELOW FROST LEVEL. (4 FEET)
3- 12 INCH CONCRETE COLLAR MINIMUM 24 INCHES PAST STRAIGHT SIDES.
4- FILL REMOVED, TO BE SLOPED AROUND OUTSIDE PERIMETER.

NONCOMPLIANCE VOIDS WARRANTY

5- ALL BARTOP PANELS AVAILABLE IN 42" TO 48" PANEL HEIGHTS.

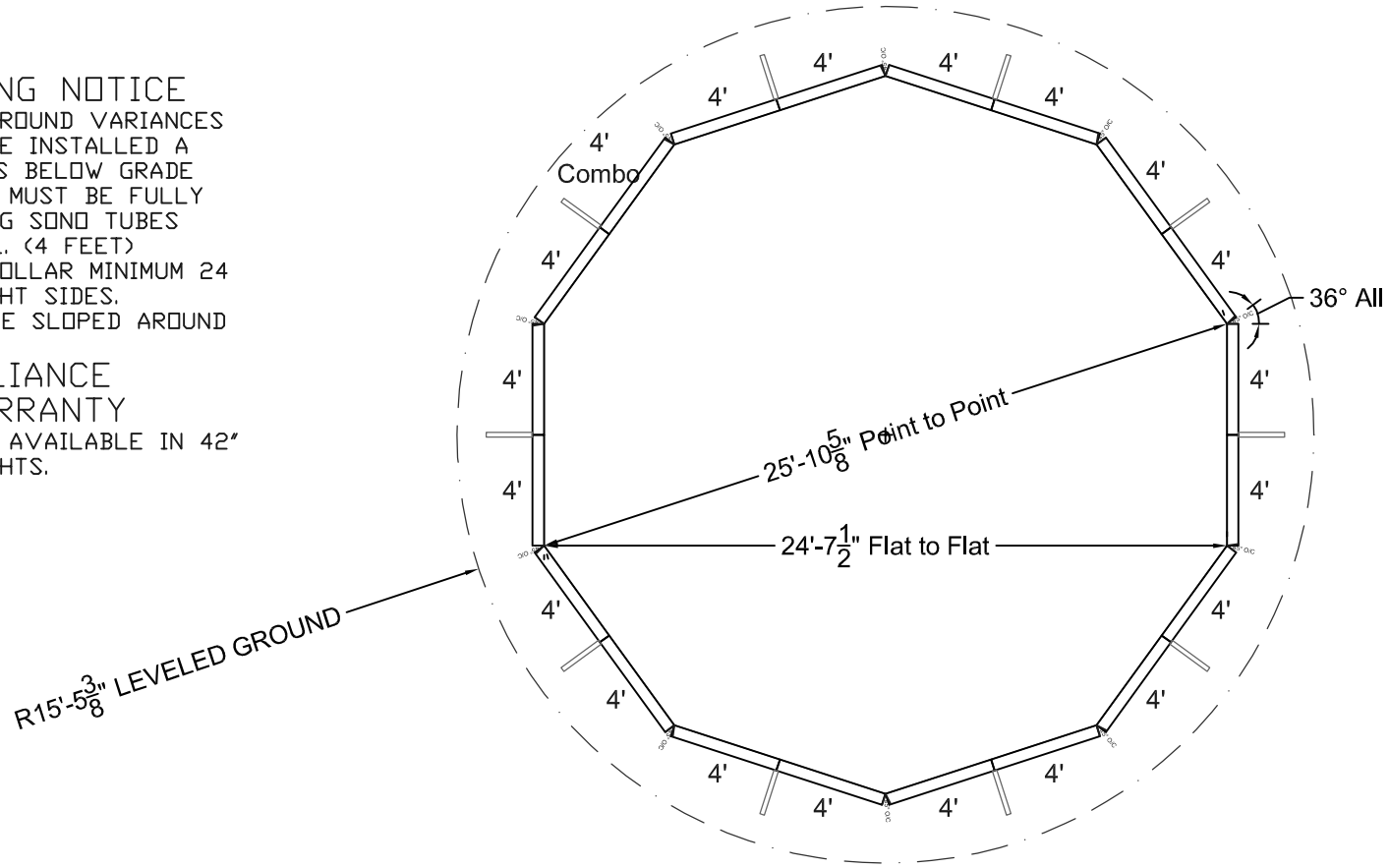

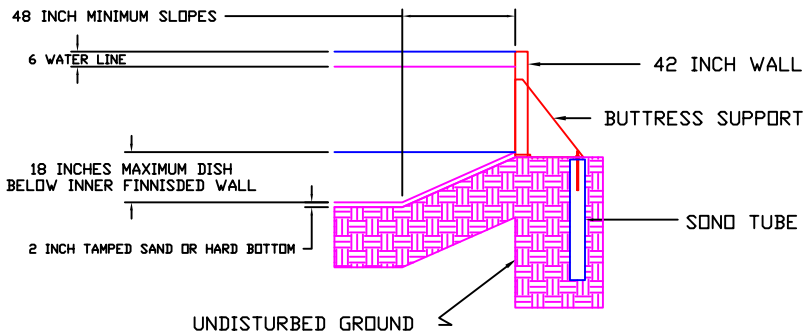

DESCRIPTION	QTY
4' STR	19
4' STR CBO	1
36° O/C	10
BUTTRESS SUPPORTS	10
STD HARDWARE PACK	1

ONGROUND BARTOP POOLS

KIT REF# MNB2626-DE-42

MEGNA POOLS

Megna Plastic Packaging Corp.

SIZE:		SHAPE:			HAND:	DWG#	
25'-11" x 24'-7"		DECAGON			N/A	26FT	B
PER.:	80'	S.A.:	492.43 ft²	VOL.:	0.00 gal.us	DATE: 21/01/2010	APPROVED:
PER.:	24.38 m	S.A.:	45.75 m²	VOL.:	0.00 liters	DRAWN BY: BCC	

STAKE OUT

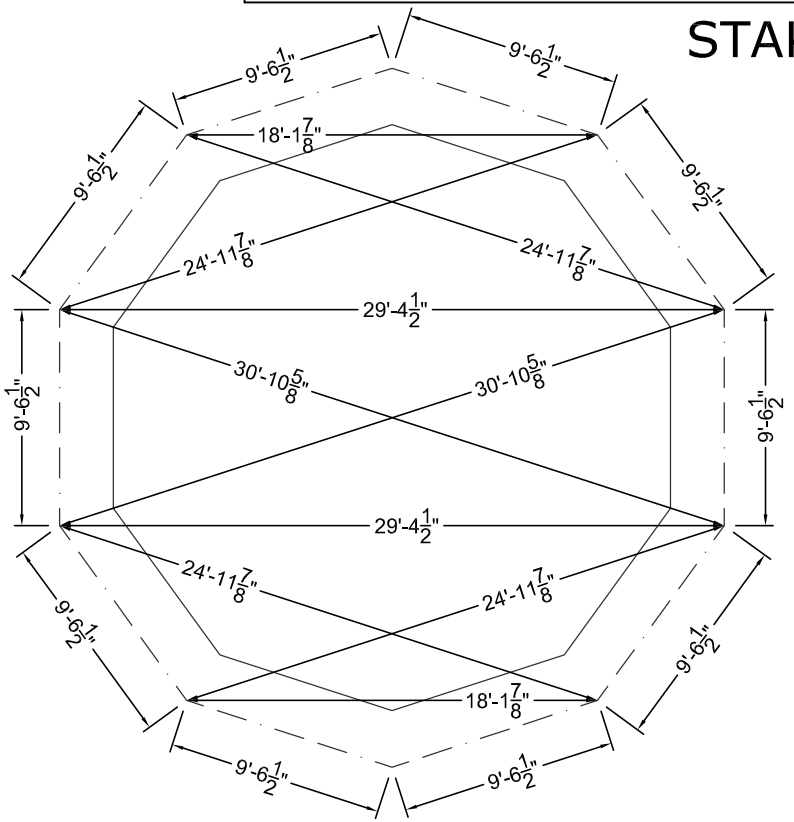

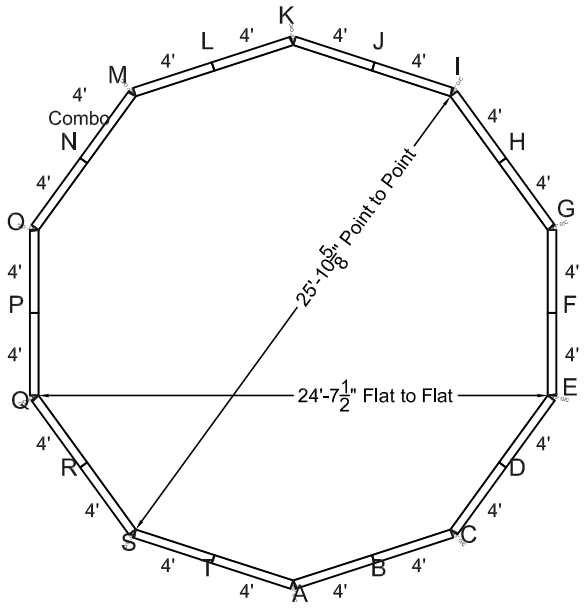

STEEL CHECK

KIT REF# MNB2626-DE-42

MEGNA POOLS
Megna Plastic Packaging Corp.

SIZE:	SHAPE:	HAND:	DWG#
12'-1" x 23'-1"	GRECIAN	N/A	12X23 A

PER.:	62'	S.A.:	253.49 ft²	VOL.:	0.00 gal.us
PER.:	18.90 m	S.A.:	23.55 m²	VOL.:	0.00 liters

DATE: 19/01/2010 | APPROVED:
DRAWN BY: BCC

ALL DIMENSIONS ARE FINISHED

MANUFACTURING NOTICE

1- DUE TO UNCERTAIN GROUND VARIANCES POOL WALLS MUST BE INSTALLED A MINIMUM OF 6 INCHES BELOW GRADE
2- BUTTRESS SUPPORTS MUST BE FULLY SUPPORTED INCLUDING SONO TUBES BELOW FROST LEVEL. (4 FEET)
3- 12 INCH CONCRETE COLLAR MINIMUM 24 INCHES PAST STRAIGHT SIDES.
4- FILL REMOVED, TO BE SLOPED AROUND OUTSIDE PERIMETER.

NONCOMPLIANCE VOIDS WARRANTY

5- ALL BARTOP PANELS AVAILABLE IN 42" TO 48" PANEL HEIGHTS.

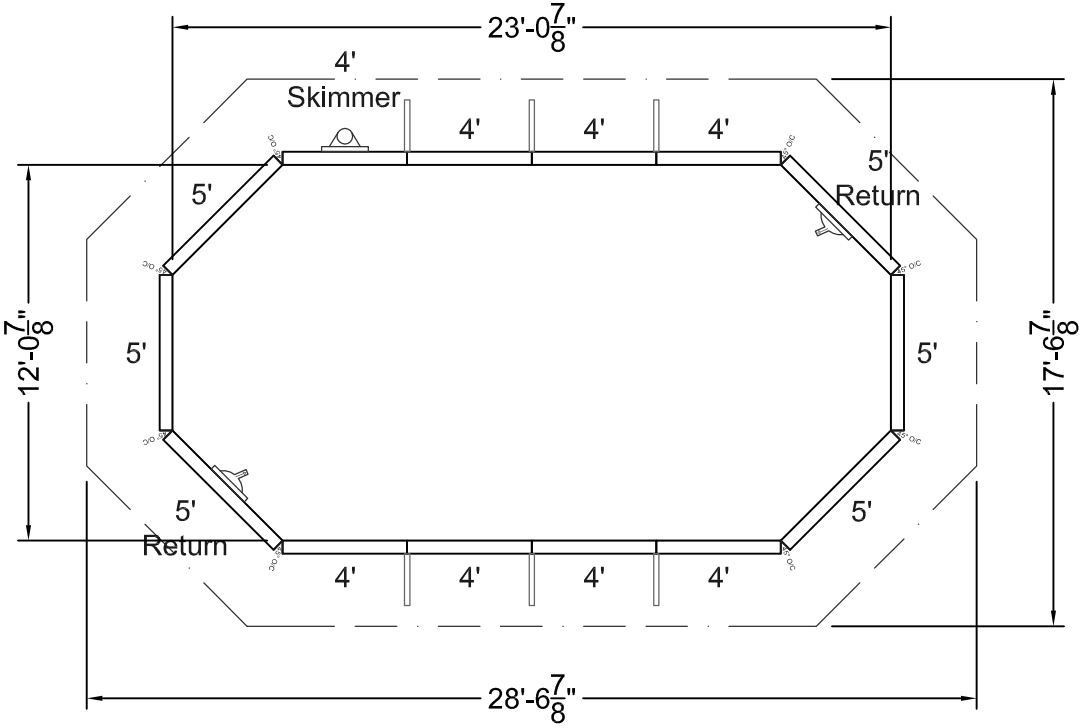

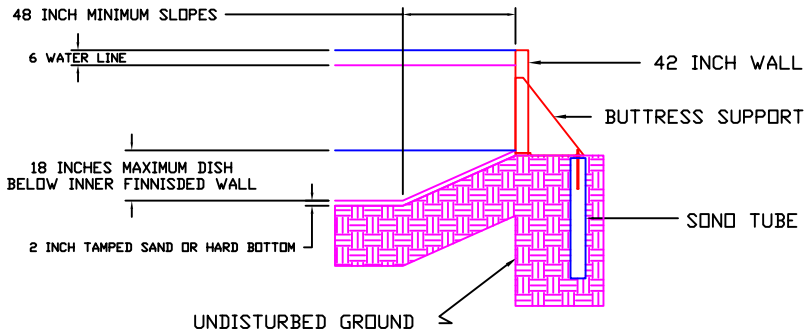

DESCRIPTION	QTY
4' STR	7
4' STR SKM	1
5' STR	4
5' STR RTN	2
45° O/C	8
BUTTRESS SUPPORTS	6
STD HARDWARE PACK	1

ONGROUND BARTOP POOLS

KIT REF# MNB1223-GR-42

MEGNA POOLS

Megna Plastic Packaging Corp.

SIZE:	SHAPE:	HAND:	DWG#	
12'-1" x 23'-1"	GRECIAN	N/A	12X23	B

PER.:	62'	S.A.:	253.49 ft²	VOL.:	0.00 gal.us	DATE: 19/01/2010	APPROVED:
PER.:	18.90 m	S.A.:	23.55 m²	VOL.:	0.00 liters	DRAWN BY: BCC	

STAKE OUT

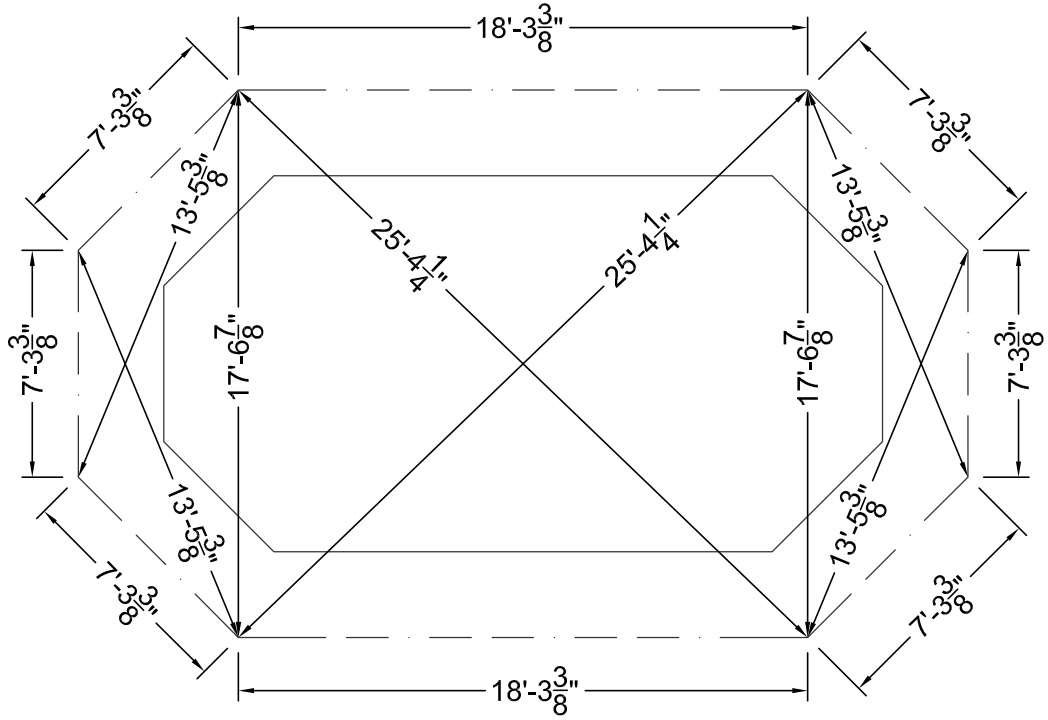

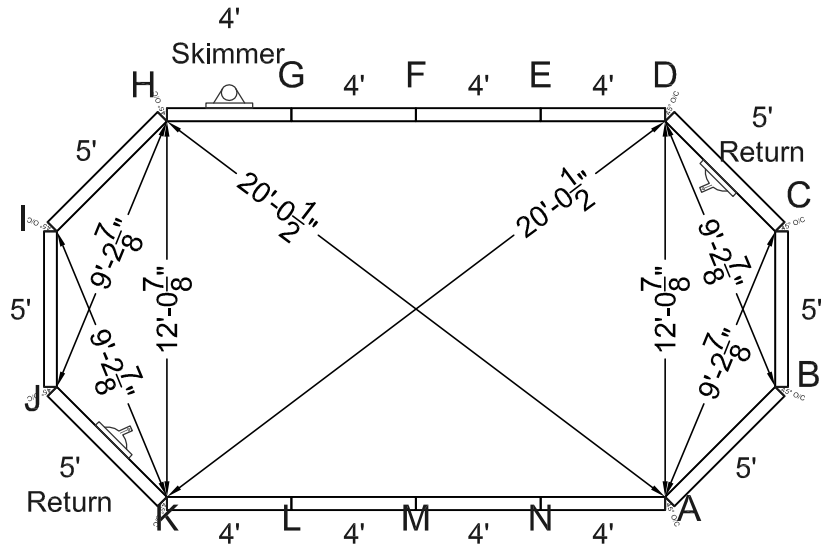

STEEL CHECK

KIT REF# MNB1223-GR-42

MEGNA POOLS
Megna Plastic Packaging Corp.

SIZE:	SHAPE:	HAND:	DWG#
12'-1" x 24'-1"	GRECIAN	N/A	12X24 A

PER.:	64'	S.A.:	265.56 ft²	VOL.:	0.00 gal.us
PER.:	19.51 m	S.A.:	24.67 m²	VOL.:	0.00 liters

DATE: 19/01/2010 | APPROVED:

DRAWN BY: BCC

ALL DIMENSIONS ARE FINISHED

MANUFACTURING NOTICE

1- DUE TO UNCERTAIN GROUND VARIANCES POOL WALLS MUST BE INSTALLED A MINIMUM OF 6 INCHES BELOW GRADE
2- BUTTRESS SUPPORTS MUST BE FULLY SUPPORTED INCLUDING SONO TUBES BELOW FROST LEVEL. (4 FEET)
3- 12 INCH CONCRETE COLLAR MINIMUM 24 INCHES PAST STRAIGHT SIDES.
4- FILL REMOVED, TO BE SLOPED AROUND OUTSIDE PERIMETER.

NONCOMPLIANCE VOIDS WARRANTY

5- ALL BARTOP PANELS AVAILABLE IN 42" TO 48" PANEL HEIGHTS.

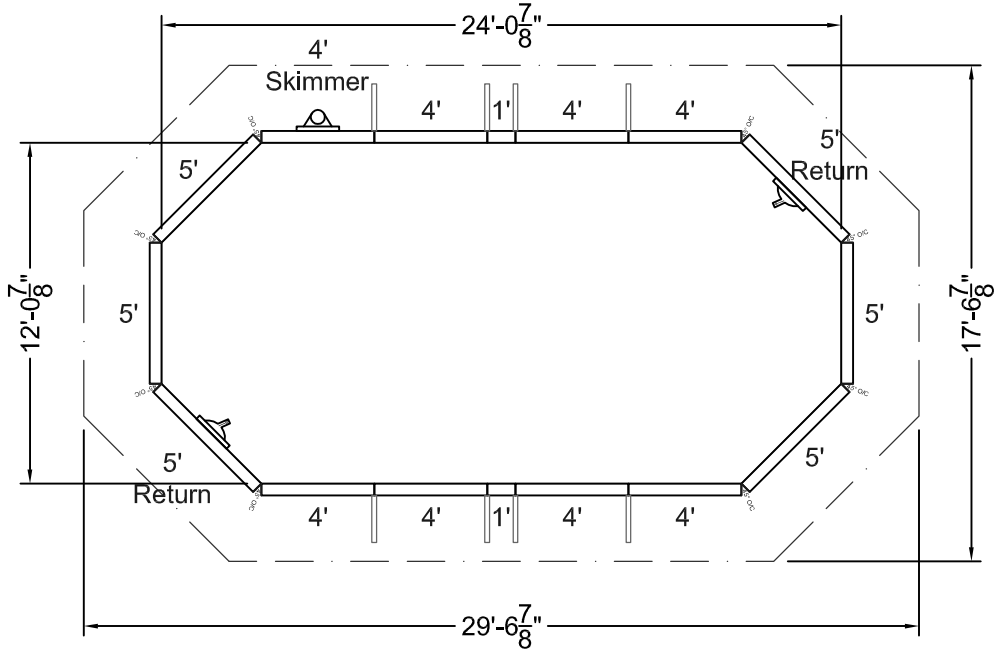

DESCRIPTION	QTY
1' STR	2
4' STR	7
4' STR SKM	1
5' STR	4
5' STR RTN	2
45° O/C	8
BUTTRESS SUPPORTS	8
STD HARDWARE PACK	1

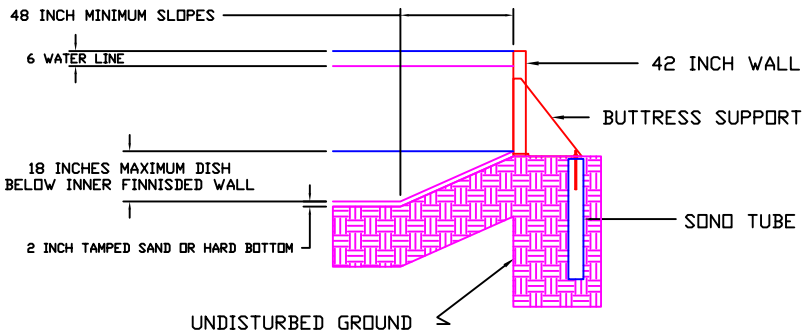

ONGROUND BARTOP POOLS

KIT REF# MNB1224-GR-42

MEGNA POOLS

Megna Plastic Packaging Corp.

SIZE: 12'-1" x 24'-1"		SHAPE: GRECIAN			HAND: N/A	DWG# 12X24	B
PER.:	64'	S.A.:	265.56 ft²	VOL.: 0.00 gal.us	DATE: 19/01/2010	APPROVED:	
PER.:	19.51 m	S.A.:	24.67 m²	VOL.: 0.00 liters	DRAWN BY: BCC		

STAKE OUT

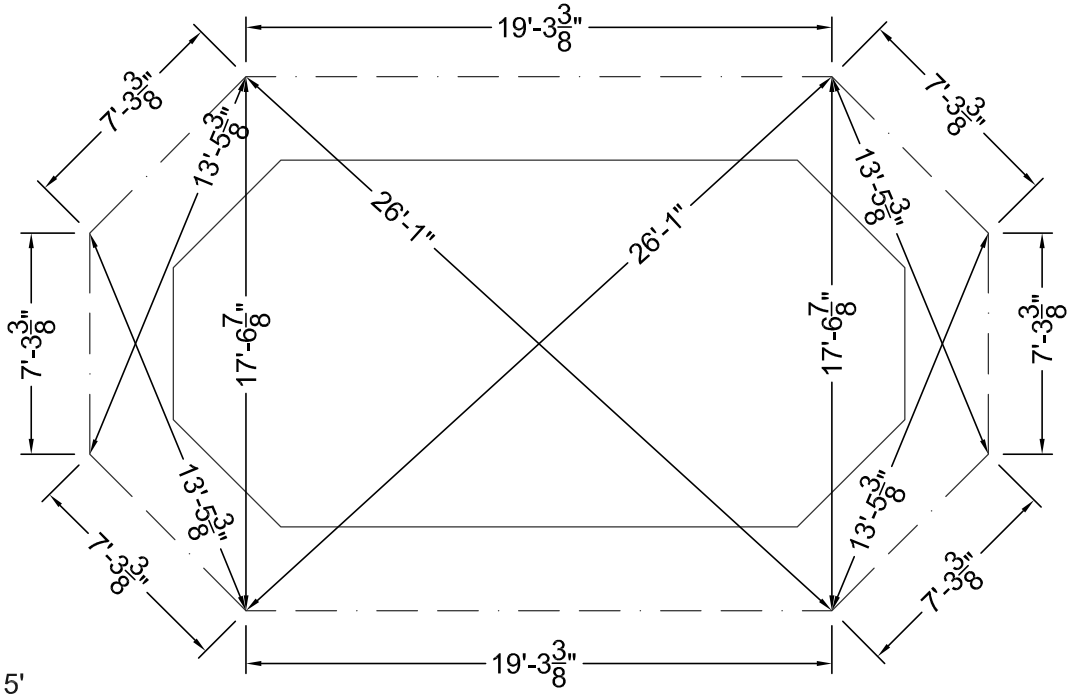

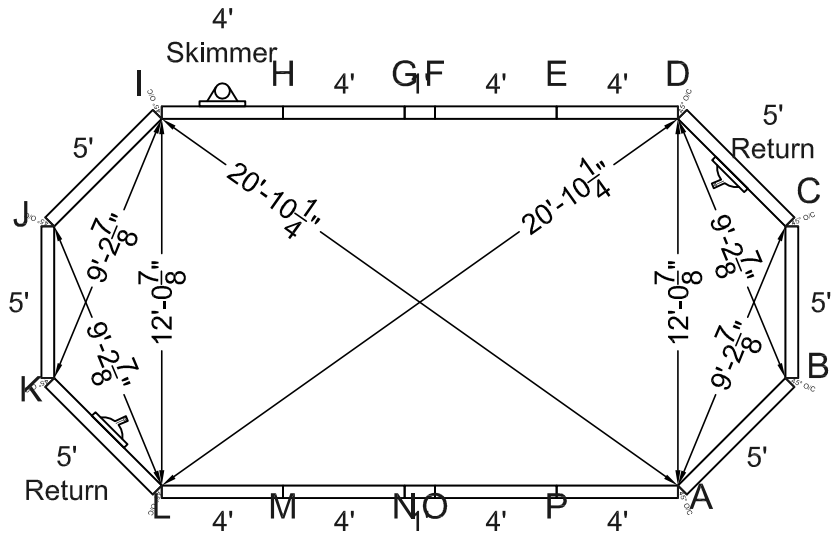

STEEL CHECK

KIT REF# MNB1224-GR-42

MEGNA POOLS
Megna Plastic Packaging Corp.

SIZE:	SHAPE:	HAND:	DWG#
14'-6" x 24'-6"	GRECIAN	N/A	14X24 A

PER.:	68'	S.A.:	318.68 ft²	VOL.:	0.00 gal.us
PER.:	20.73 m	S.A.:	29.61 m²	VOL.:	0.00 liters

DATE: 19/01/2010 | APPROVED:
DRAWN BY: BCC

ALL DIMENSIONS ARE FINISHED

MANUFACTURING NOTICE

1- DUE TO UNCERTAIN GROUND VARIANCES POOL WALLS MUST BE INSTALLED A MINIMUM OF 6 INCHES BELOW GRADE
2- BUTTRESS SUPPORTS MUST BE FULLY SUPPORTED INCLUDING SONO TUBES BELOW FROST LEVEL. (4 FEET)
3- 12 INCH CONCRETE COLLAR MINIMUM 24 INCHES PAST STRAIGHT SIDES.
4- FILL REMOVED, TO BE SLOPED AROUND OUTSIDE PERIMETER.

NONCOMPLIANCE VOIDS WARRANTY

5- ALL BARTOP PANELS AVAILABLE IN 42" TO 48" PANEL HEIGHTS.

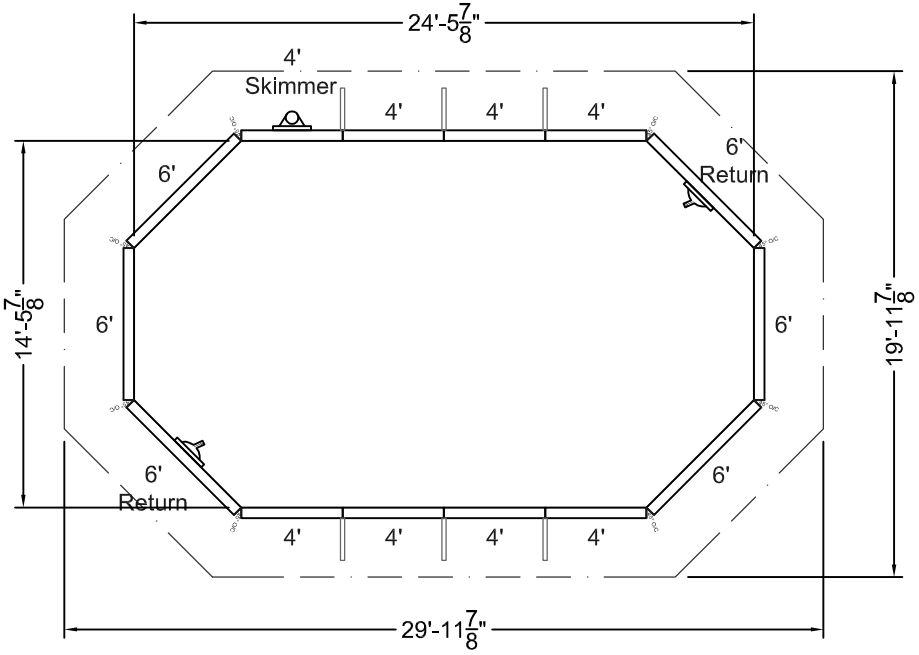

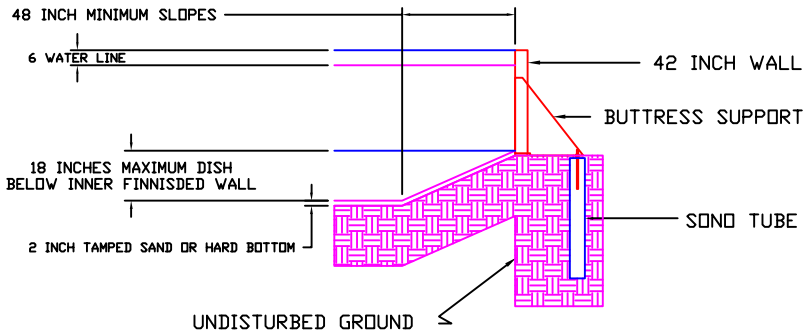

DESCRIPTION	QTY
4' STR	7
4' STR SKM	1
6' STR	4
6' STR RTN	2
45° O/C	8
BUTTRESS SUPPORTS	6
STD HARDWARE PACK	1

ONGROUND BARTOP POOLS

KIT REF# MNB1424-GR-42

MEGNA POOLS

Megna Plastic Packaging Corp.

SIZE: 14'-6" x 24'-6"		SHAPE: GRECIAN				HAND: N/A	DWG# 14X24 B
PER.:	68'	S.A.:	318.68 ft²	VOL.:	0.00 gal.us	DATE: 19/01/2010	APPROVED:
PER.:	20.73 m	S.A.:	29.61 m²	VOL.:	0.00 liters	DRAWN BY: BCC	

STAKE OUT

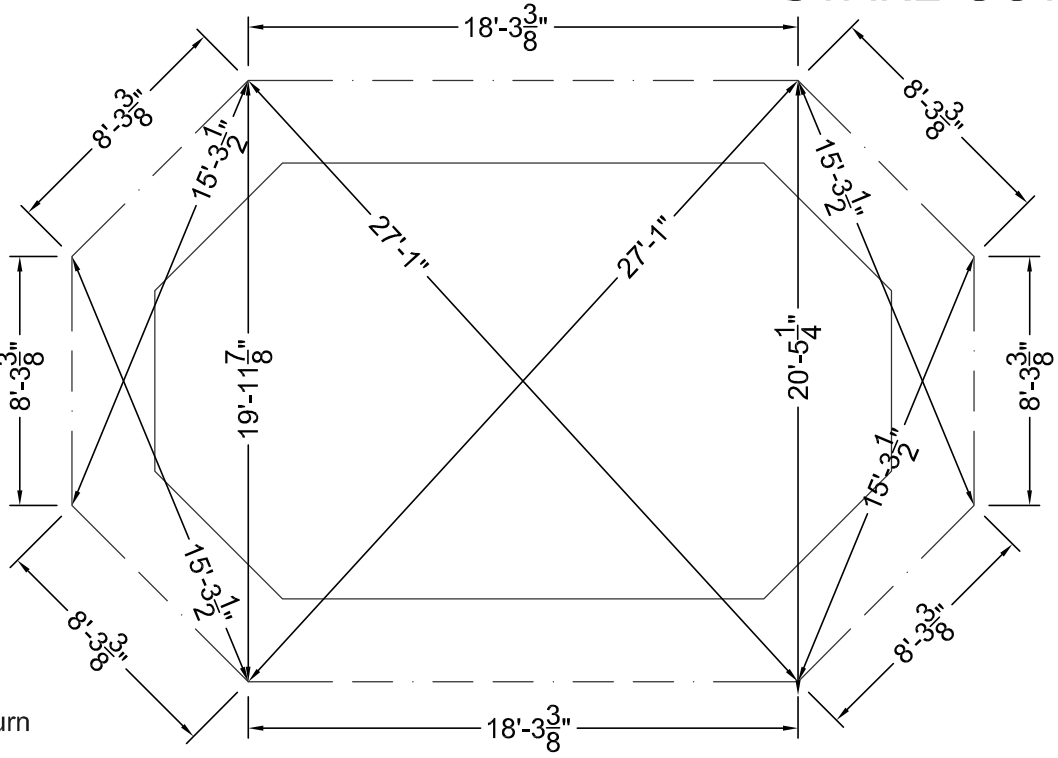

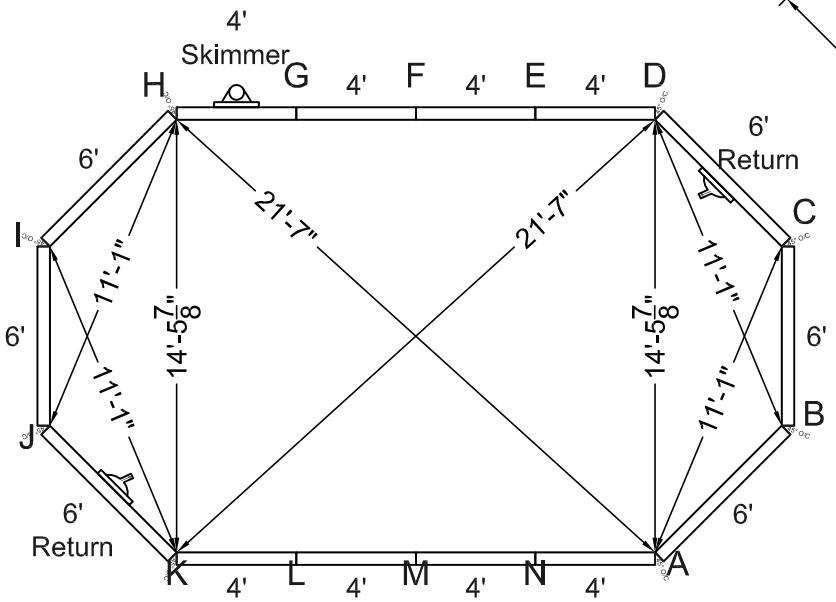

STEEL CHECK

KIT REF# MNB1424-GR-42

MEGNA POOLS
Megna Plastic Packaging Corp.

SIZE:	SHAPE:	HAND:	DWG#
14'-6" x 28'-6"	GRECIAN	N/A	14X28 A

PER.:	76'	S.A.:	376.62 ft²	VOL.:	0.00 gal.us
PER.:	23.16 m	S.A.:	34.99 m²	VOL.:	0.00 liters

DATE: 19/01/2010 | APPROVED:

DRAWN BY: BCC

ALL DIMENSIONS ARE FINISHED

MANUFACTURING NOTICE

1- DUE TO UNCERTAIN GROUND VARIANCES POOL WALLS MUST BE INSTALLED A MINIMUM OF 6 INCHES BELOW GRADE
2- BUTTRESS SUPPORTS MUST BE FULLY SUPPORTED INCLUDING SONO TUBES BELOW FROST LEVEL. (4 FEET)
3- 12 INCH CONCRETE COLLAR MINIMUM 24 INCHES PAST STRAIGHT SIDES.
4- FILL REMOVED, TO BE SLOPED AROUND OUTSIDE PERIMETER.

NONCOMPLIANCE VOIDS WARRANTY

5- ALL BARTOP PANELS AVAILABLE IN 42" TO 48" PANEL HEIGHTS.

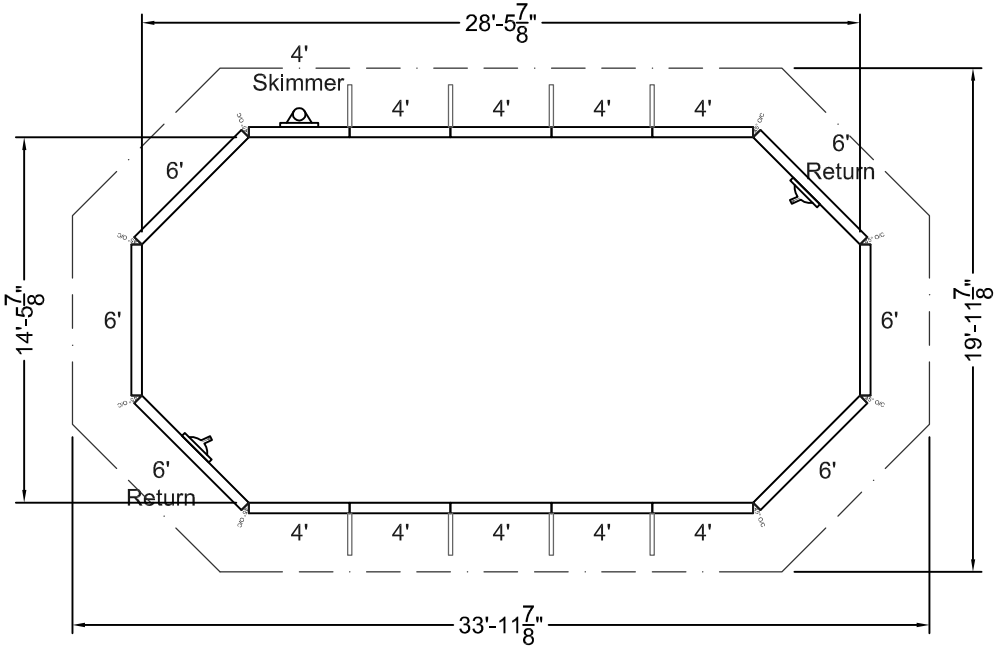

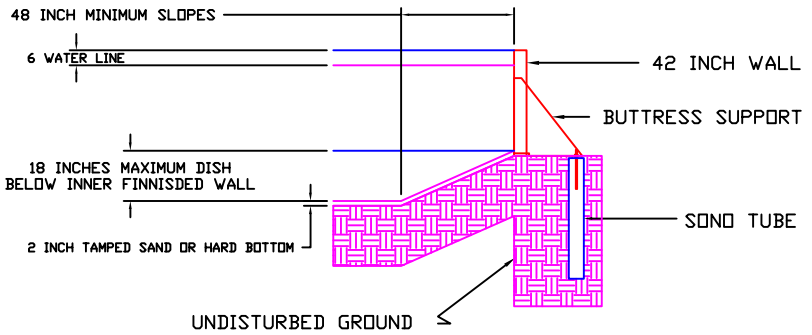

DESCRIPTION	QTY
4' STR	9
4' STR SKM	1
6' STR	4
6' STR RTN	2
45° O/C	8
BUTTRESS SUPPORTS	8
STD HARDWARE PACK	1

ONGROUND BARTOP POOLS

KIT REF# MNB1428-GR-42

MEGNA POOLS

Megna Plastic Packaging Corp.

SIZE:	SHAPE:		HAND:	DWG#	
14'-6" x 28'-6"	GRECIAN		N/A	14X28	B
PER.: 76'	S.A.: 376.62 ft²	VOL.: 0.00 gal.us	DATE: 19/01/2010	APPROVED:	
PER.: 23.16 m	S.A.: 34.99 m²	VOL.: 0.00 liters	DRAWN BY: BCC		

STAKE OUT

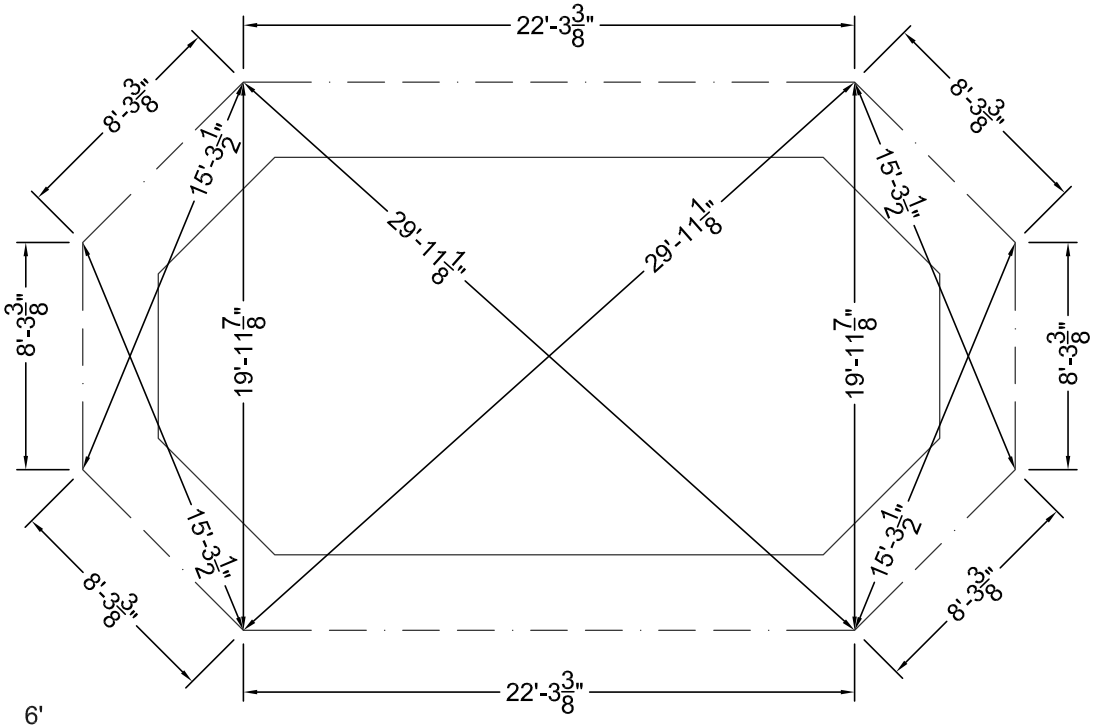

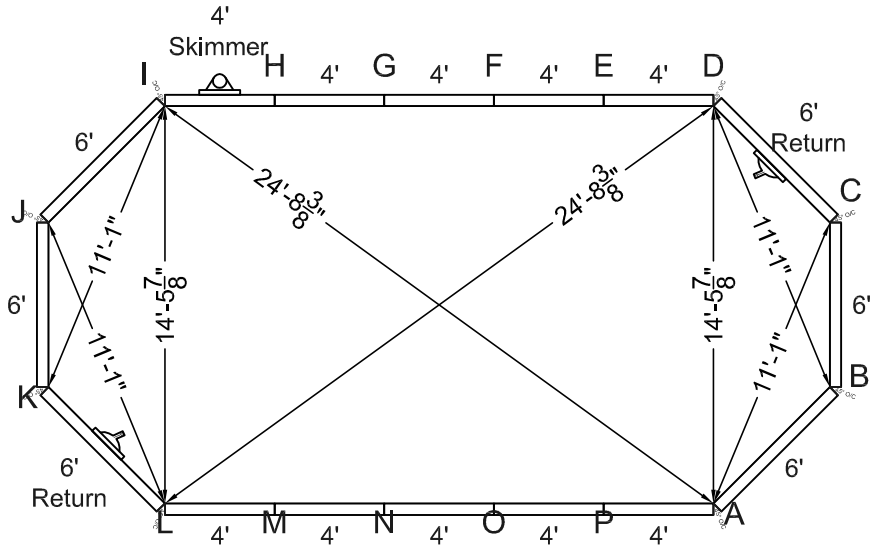

STEEL CHECK

KIT REF# MNB1428-GR-42

MEGNA POOLS
Megna Plastic Packaging Corp.

SIZE:	SHAPE:	HAND:	DWG#
16'-1" x 24'-1"	GRECIAN	N/A	16X24 A

PER.:	64'	S.A.:	265.56 ft²	VOL.:	0.00 gal.us
PER.:	19.51 m	S.A.:	24.67 m²	VOL.:	0.00 liters

DATE: 05/04/2010 | APPROVED:

DRAWN BY: BCC

ALL DIMENSIONS ARE FINISHED

MANUFACTURING NOTICE

1- DUE TO UNCERTAIN GROUND VARIANCES POOL WALLS MUST BE INSTALLED A MINIMUM OF 6 INCHES BELOW GRADE
2- BUTTRESS SUPPORTS MUST BE FULLY SUPPORTED INCLUDING SONO TUBES BELOW FROST LEVEL. (4 FEET)
3- 12 INCH CONCRETE COLLAR MINIMUM 24 INCHES PAST STRAIGHT SIDES.
4- FILL REMOVED, TO BE SLOPED AROUND OUTSIDE PERIMETER.

NONCOMPLIANCE VOIDS WARRANTY

5- ALL BARTOP PANELS AVAILABLE IN 42" TO 48" PANEL HEIGHTS.

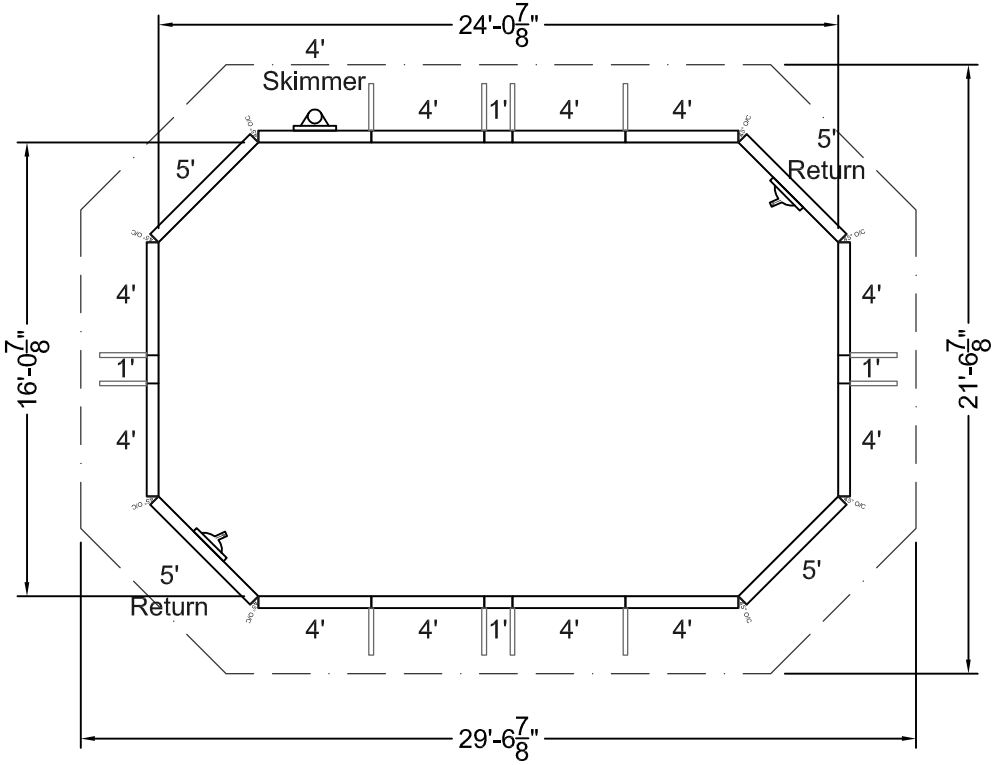

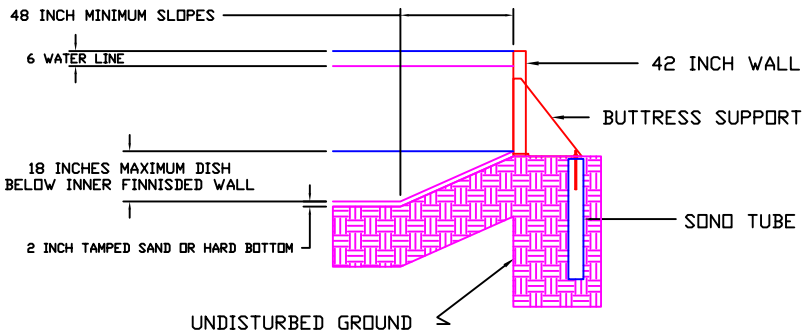

DESCRIPTION	QTY
1' STR	4
4' STR	11
4' STR SKM	1
5' STR	2
5' STR RTN	2
45° O/C	8
BUTTRESS SUPPORTS	12
STD HARDWARE PACK	1

ONGROUND BARTOP POOLS

KIT REF# MNB1624-GR-42

MEGNA POOLS

Megna Plastic Packaging Corp.

SIZE:	SHAPE:		HAND:	DWG#	
16'-1" x 24'-1"	GRECIAN		N/A	16X24	B
PER.: 64'	S.A.: 265.56 ft²	VOL.: 0.00 gal.us	DATE: 05/04/2010	APPROVED:	
PER.: 19.51 m	S.A.: 24.67 m²	VOL.: 0.00 liters	DRAWN BY: BCC		

STAKE OUT

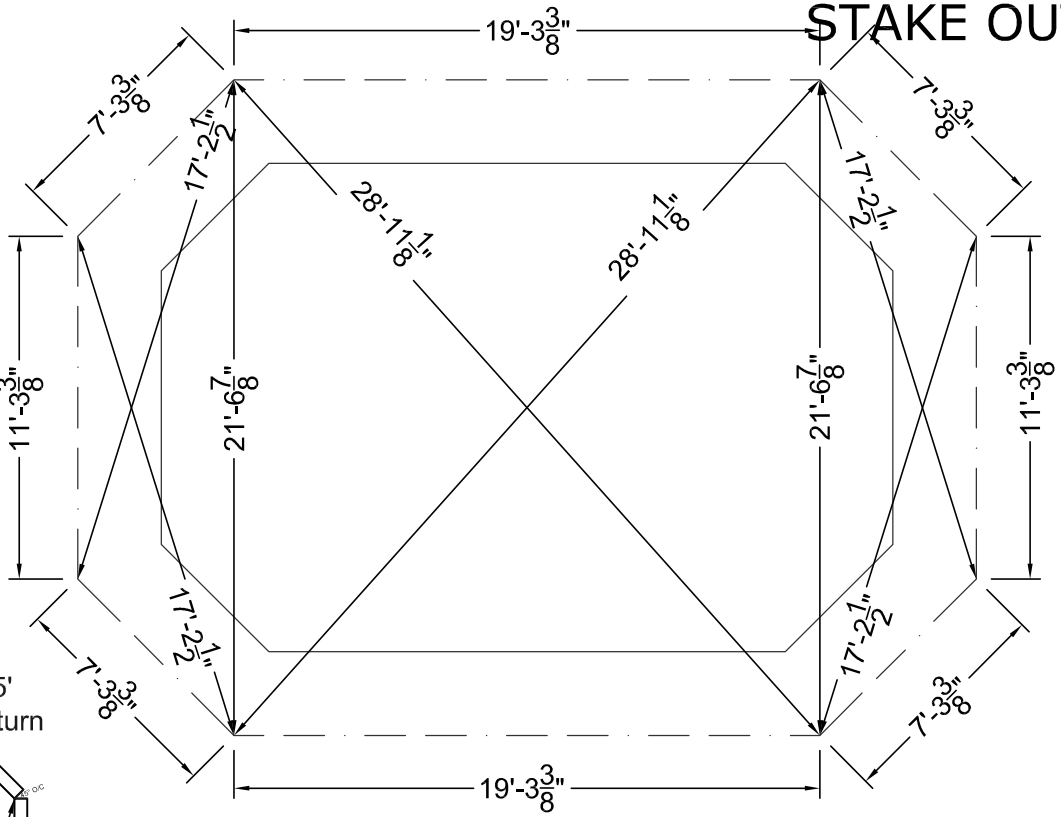

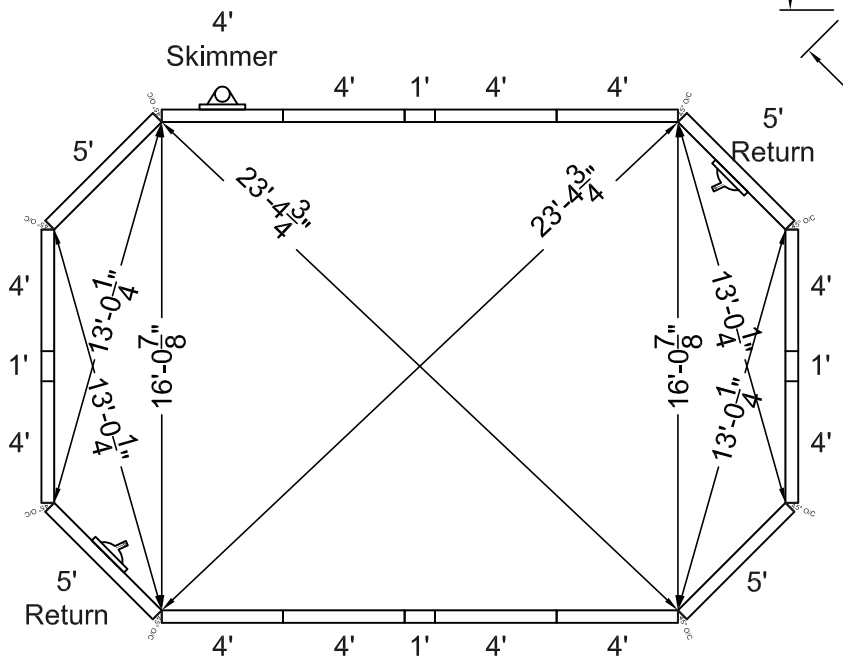

STEEL CHECK

KIT REF# MNB1624-GR-42

MEGNA POOLS
Megna Plastic Packaging Corp.

SIZE:	SHAPE:	HAND:	DWG#
16'-6" x 32'-6"	GRECIAN	N/A	16X32 A

PER.:	88'	S.A.:	499.53 ft²	VOL.:	0.00 gal.us
PER.:	26.82 m	S.A.:	46.41 m²	VOL.:	0.00 liters

DATE: 21/01/2010 | APPROVED:

DRAWN BY: BCC

ALL DIMENSIONS ARE FINISHED

MANUFACTURING NOTICE

1- DUE TO UNCERTAIN GROUND VARIANCES POOL WALLS MUST BE INSTALLED A MINIMUM OF 6 INCHES BELOW GRADE
2- BUTTRESS SUPPORTS MUST BE FULLY SUPPORTED INCLUDING SONO TUBES BELOW FROST LEVEL. (4 FEET)
3- 12 INCH CONCRETE COLLAR MINIMUM 24 INCHES PAST STRAIGHT SIDES.
4- FILL REMOVED, TO BE SLOPED AROUND OUTSIDE PERIMETER.

NONCOMPLIANCE VOIDS WARRANTY

5- ALL BARTOP PANELS AVAILABLE IN 42" TO 48" PANEL HEIGHTS.

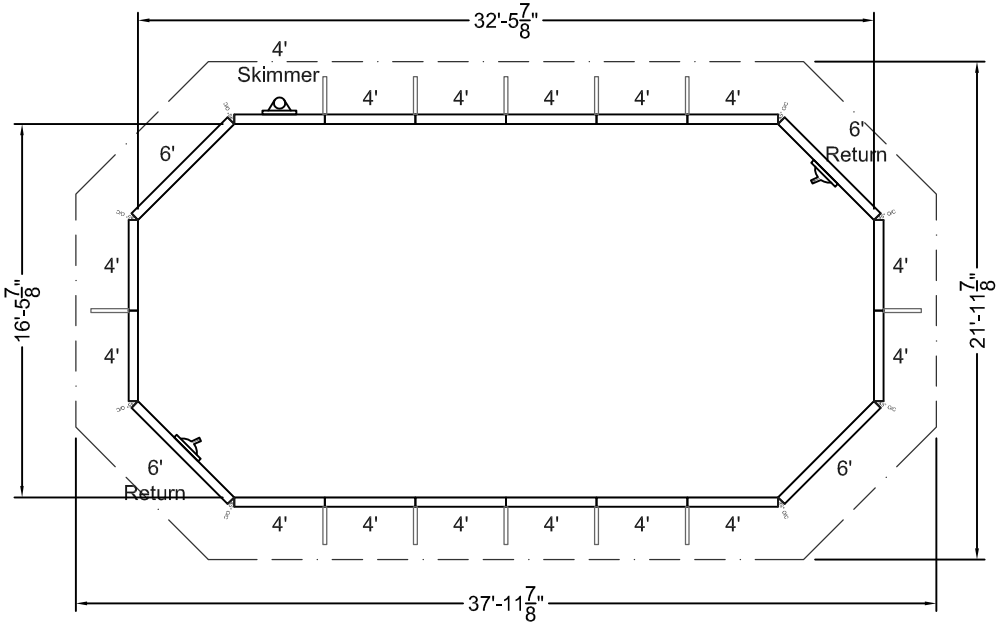

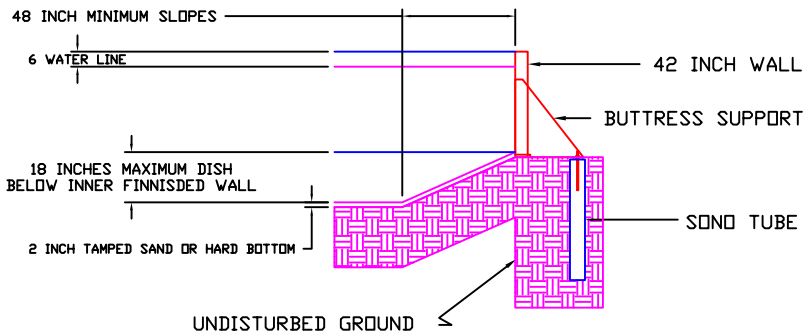

DESCRIPTION	QTY
4' STR	15
4' STR SKM	1
6' STR	2
6' STR RTN	2
45° O/C	8
BUTTRESS SUPPORTS	12
STD HARDWARE PACK	1

ONGROUND BARTOP POOLS

KIT REF# MNB1632-GR-42

MEGNA POOLS
Megna Plastic Packaging Corp.

SIZE: 16'-6" x 32'-6"	SHAPE: GRECIAN			HAND: N/A	DWG# 16X32	B
PER.: 88'	S.A.: 499.53 ft²	VOL.: 0.00 gal.us	DATE: 21/01/2010	APPROVED:
PER.: 26.82 m	S.A.: 46.41 m²	VOL.: 0.00 liters	DRAWN BY: BCC	

STAKE OUT

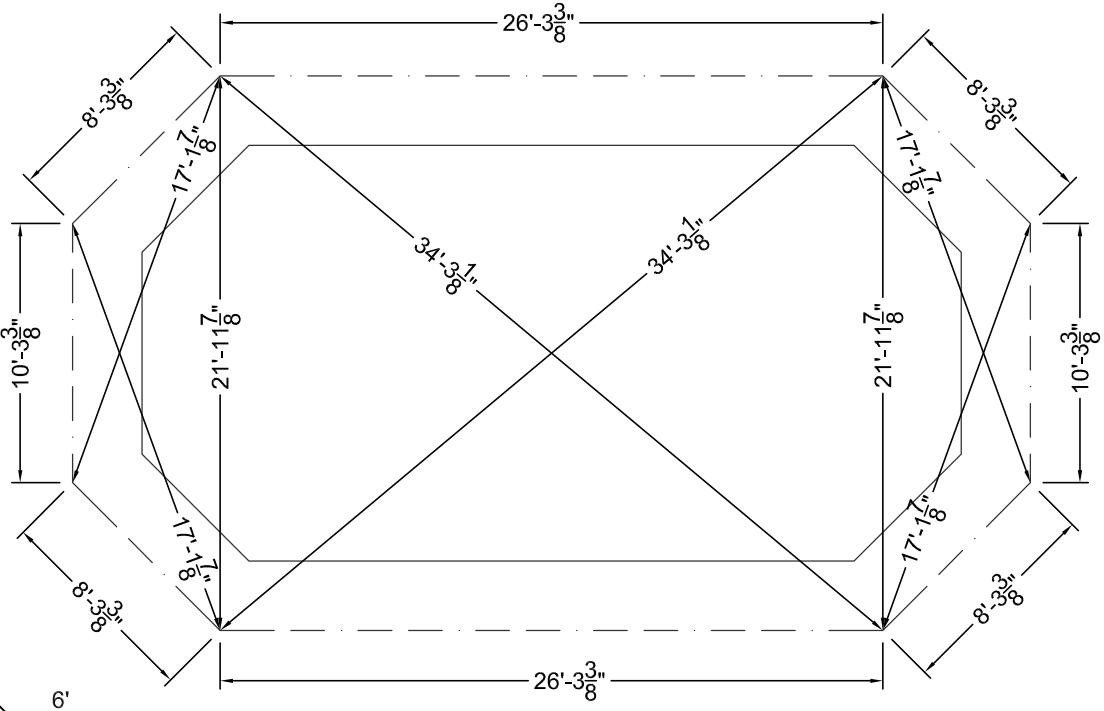

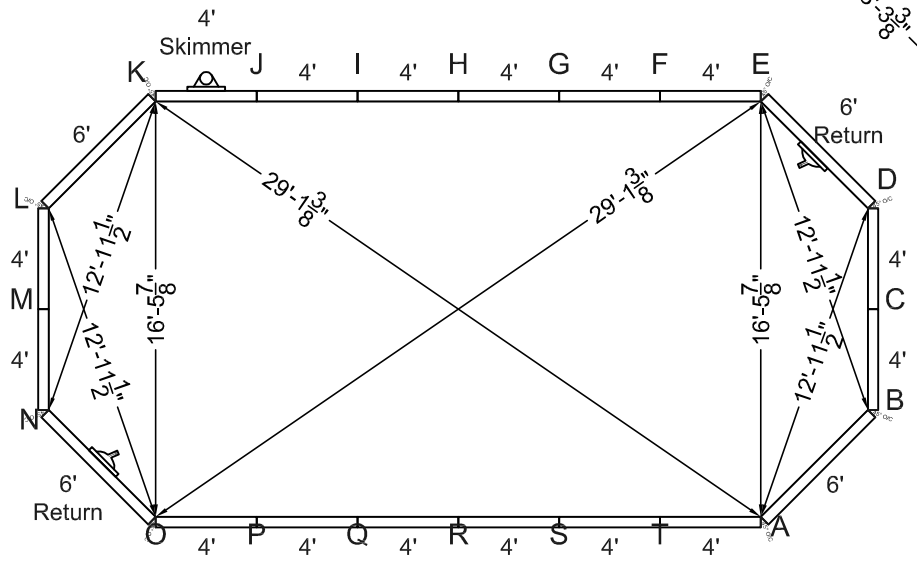

STEEL CHECK

KIT REF# MNB1632-GR-42

MEGNA POOLS
Megna Plastic Packaging Corp.

SIZE:	SHAPE:	HAND:	DWG#
16'-11" x 30'-11"	GRECIAN	N/A	17X31 A

PER.:	84'	S.A.:	473.19 ft²	VOL.:	0.00 gal.us
PER.:	25.60 m	S.A.:	43.96 m²	VOL.:	0.00 liters

DATE: 21/01/2010 | APPROVED:

DRAWN BY: BCC

ALL DIMENSIONS ARE FINISHED

MANUFACTURING NOTICE

1- DUE TO UNCERTAIN GROUND VARIANCES POOL WALLS MUST BE INSTALLED A MINIMUM OF 6 INCHES BELOW GRADE
2- BUTTRESS SUPPORTS MUST BE FULLY SUPPORTED INCLUDING SONO TUBES BELOW FROST LEVEL. (4 FEET)
3- 12 INCH CONCRETE COLLAR MINIMUM 24 INCHES PAST STRAIGHT SIDES.
4- FILL REMOVED, TO BE SLOPED AROUND OUTSIDE PERIMETER.

NONCOMPLIANCE VOIDS WARRANTY

5- ALL BARTOP PANELS AVAILABLE IN 42" TO 48" PANEL HEIGHTS.

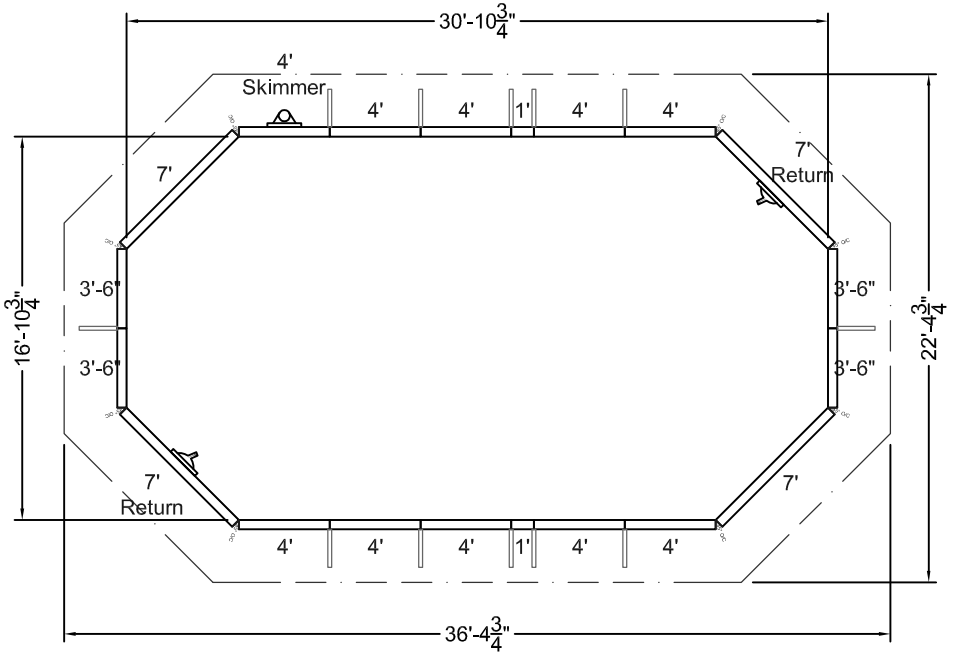

DESCRIPTION	QTY
1' STR	2
3'-6" STR	4
4' STR	9
4' STR SKM	1
7' STR	2
7' STR RTN	2
45° O/C	8
BUTTRESS SUPPORTS	12
STD HARDWARE PACK	1

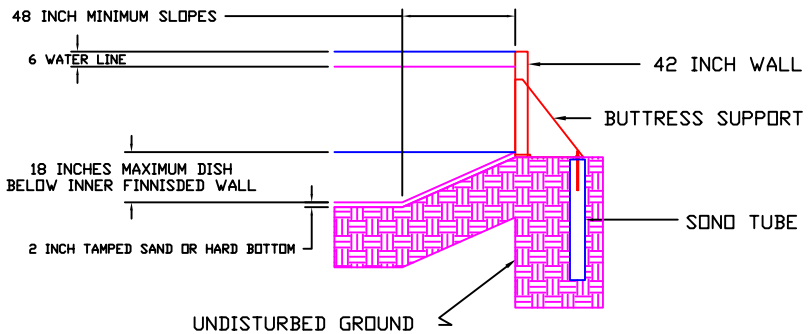

ONGROUND BARTOP POOLS

KIT REF# MNB1731-GR-42

MEGNA POOLS
Megna Plastic Packaging Corp.

SIZE:	SHAPE:	HAND:	DWG#	
16'-11" x 30'-11"	GRECIAN	N/A	17X31	B

PER.:	84'	S.A.:	473.19 ft²	VOL.:	0.00 gal.us	DATE: 21/01/2010	APPROVED:
PER.:	25.60 m	S.A.:	43.96 m²	VOL.:	0.00 liters	DRAWN BY: BCC	

STAKE OUT

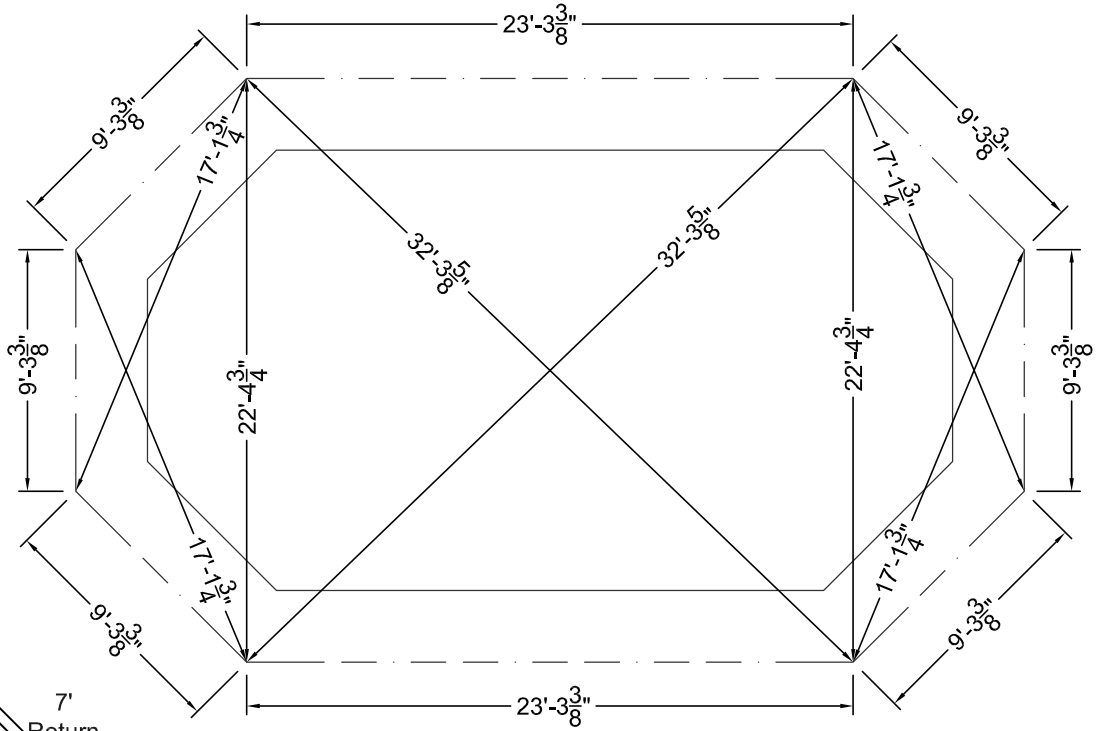

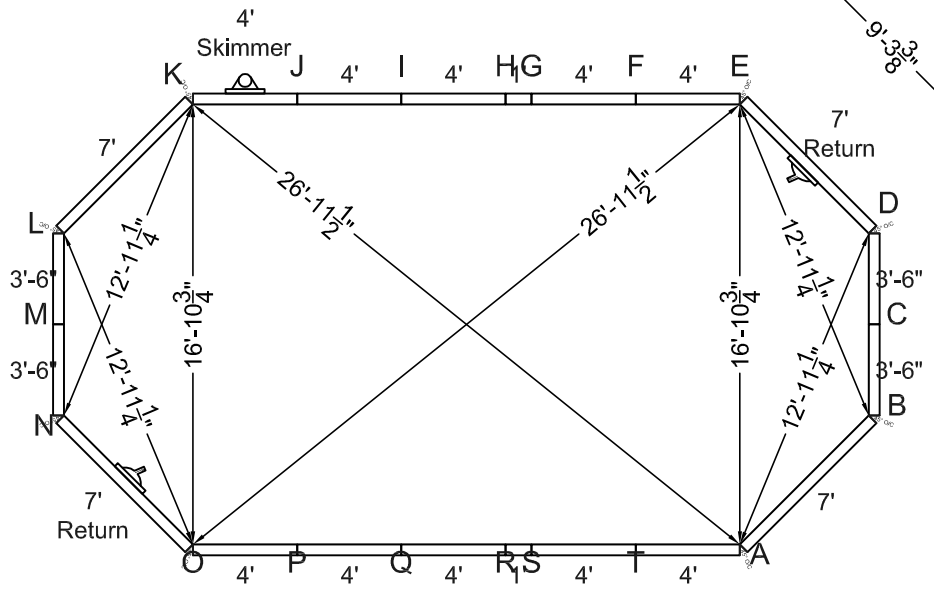

STEEL CHECK

KIT REF# MNB1731-GR-42

MEGNA POOLS

Megna Plastic Packaging Corp.

SIZE: 16'-11" x 33'-11"	SHAPE: GRECIAN		HAND: N/A	DWG# 17X34 A
PER.: 90'	S.A.: 523.88 ft²	VOL.: 0.00 gal.us	DATE: 21/01/2010	APPROVED:
PER.: 27.43 m	S.A.: 48.67 m²	VOL.: 0.00 liters	DRAWN BY: BCC	

ALL DIMENSIONS ARE FINISHED

MANUFACTURING NOTICE

1- DUE TO UNCERTAIN GROUND VARIANCES POOL WALLS MUST BE INSTALLED A MINIMUM OF 6 INCHES BELOW GRADE
2- BUTTRESS SUPPORTS MUST BE FULLY SUPPORTED INCLUDING SONO TUBES BELOW FROST LEVEL. (4 FEET)
3- 12 INCH CONCRETE COLLAR MINIMUM 24 INCHES PAST STRAIGHT SIDES.
4- FILL REMOVED, TO BE SLOPED AROUND OUTSIDE PERIMETER.

NONCOMPLIANCE VOIDS WARRANTY

5- ALL BARTOP PANELS AVAILABLE IN 42" TO 48" PANEL HEIGHTS.

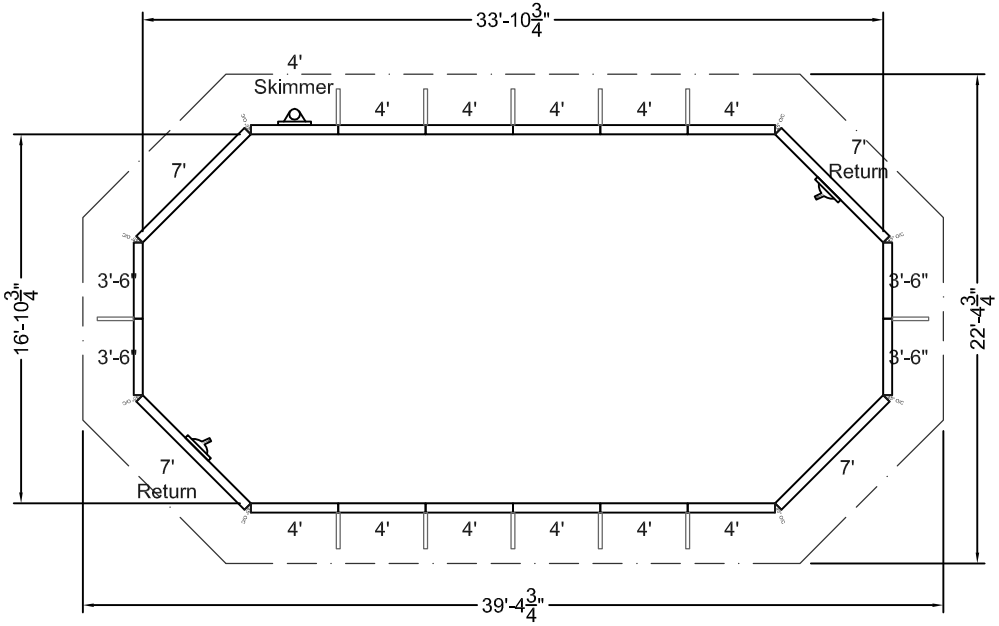

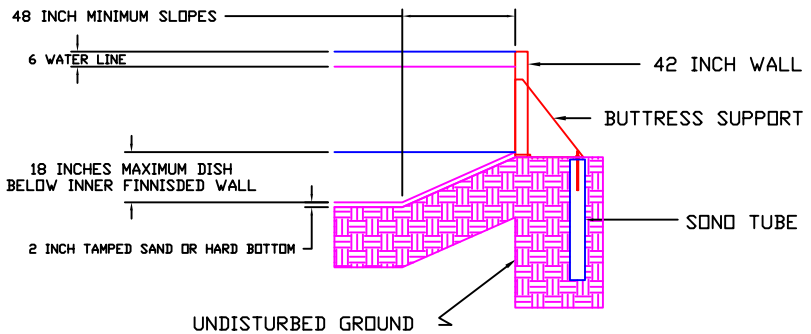

DESCRIPTION	QTY
3'-6" STR	4
4' STR	11
4' STR SKM	1
7' STR	2
7' STR RTN	2
45° O/C	8
BUTTRESS SUPPORTS	12
STD HARDWARE PACK	1

ONGROUND BARTOP POOLS

KIT REF# MNB1734-GR-42

MEGNA POOLS

Megna Plastic Packaging Corp.

SIZE:	SHAPE:	HAND:	DWG#	
16'-11" x 33'-11"	GRECIAN	N/A	17X34	B

PER.:	90'	S.A.:	523.88 ft²	VOL.:	0.00 gal.us	DATE: 21/01/2010	APPROVED:
PER.:	27.43 m	S.A.:	48.67 m²	VOL.:	0.00 liters	DRAWN BY: BCC	

STAKE OUT

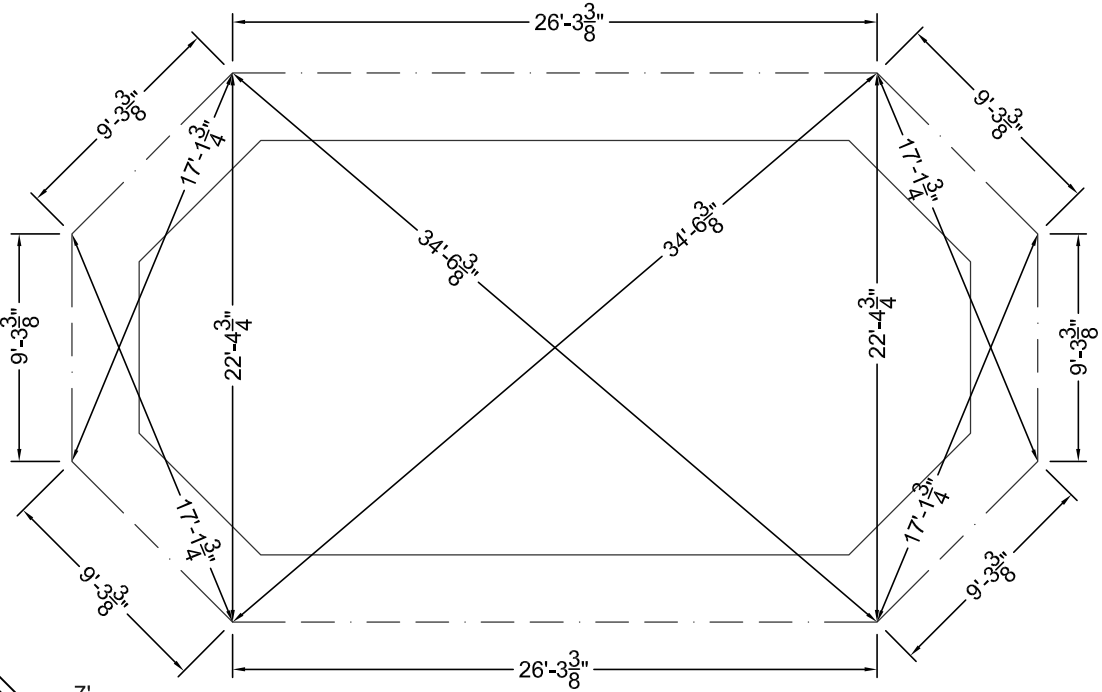

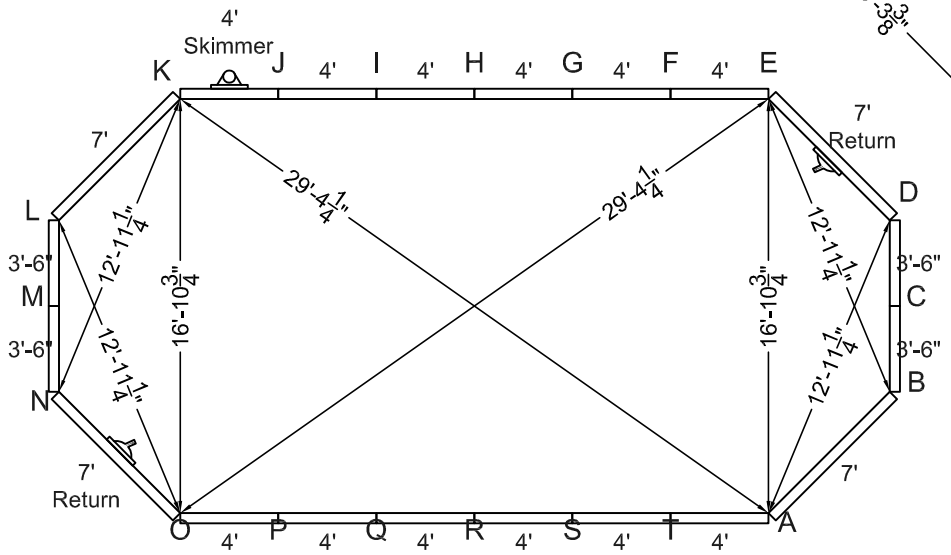

STEEL CHECK

KIT REF# MNB1734-GR-42

MEGNA POOLS
Megna Plastic Packaging Corp.

SIZE: 19'-4" x 35'-4"	SHAPE: GRECIAN		HAND: N/A	DWG# 19X35 A
PER.: 96'	S.A.: 618.04 ft²	VOL.: 0.00 gal.us	DATE: 21/01/2010	APPROVED:
PER.: 29.26 m	S.A.: 57.42 m²	VOL.: 0.00 liters	DRAWN BY: BCC	

ALL DIMENSIONS ARE FINISHED

MANUFACTURING NOTICE

1- DUE TO UNCERTAIN GROUND VARIANCES POOL WALLS MUST BE INSTALLED A MINIMUM OF 6 INCHES BELOW GRADE
2- BUTTRESS SUPPORTS MUST BE FULLY SUPPORTED INCLUDING SONO TUBES BELOW FROST LEVEL. (4 FEET)
3- 12 INCH CONCRETE COLLAR MINIMUM 24 INCHES PAST STRAIGHT SIDES.
4- FILL REMOVED, TO BE SLOPED AROUND OUTSIDE PERIMETER.

NONCOMPLIANCE VOIDS WARRANTY

5- ALL BARTOP PANELS AVAILABLE IN 42" TO 48" PANEL HEIGHTS.

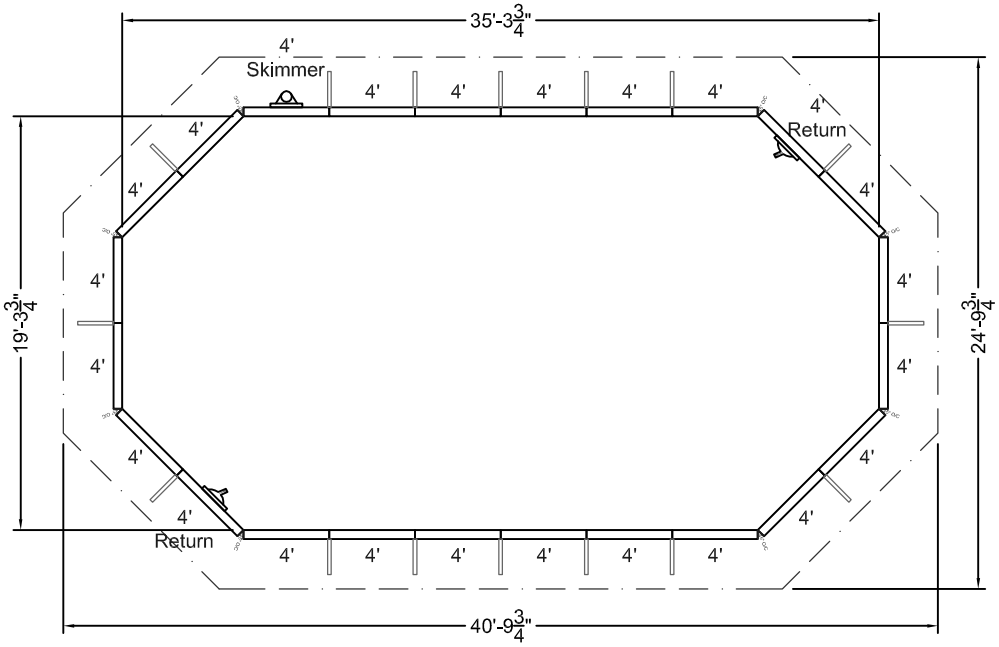

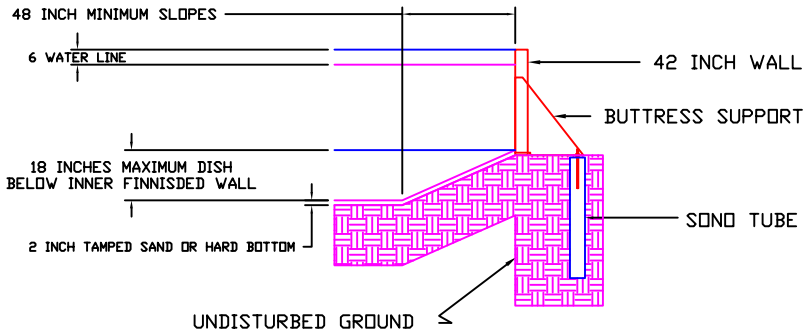

DESCRIPTION	QTY
4' STR	21
4' STR RTN	2
4' STR SKM	1
45° O/C	8
BUTTRESS SUPPORTS	16
STD HARDWARE PACK	1

ONGROUND BARTOP POOLS

KIT REF# MNB1935-GR-42

MEGNA POOLS
Megna Plastic Packaging Corp.

SIZE:	SHAPE:		HAND:	DWG#
19'-4" x 35'-4"	GRECIAN		N/A	19X35 B
PER.: 96'	S.A.: 618.04 ft²	VOL.: 0.00 gal.us	DATE: 21/01/2010	APPROVED:
PER.: 29.26 m	S.A.: 57.42 m²	VOL.: 0.00 liters	DRAWN BY: BCC	

STAKE OUT

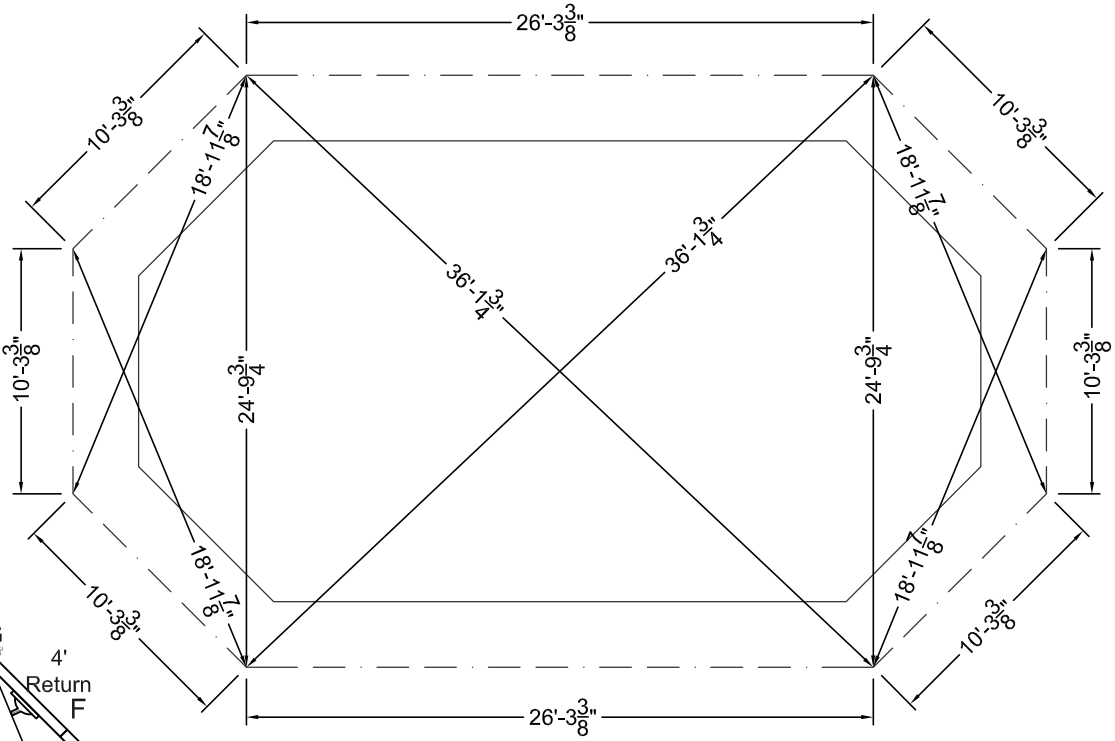

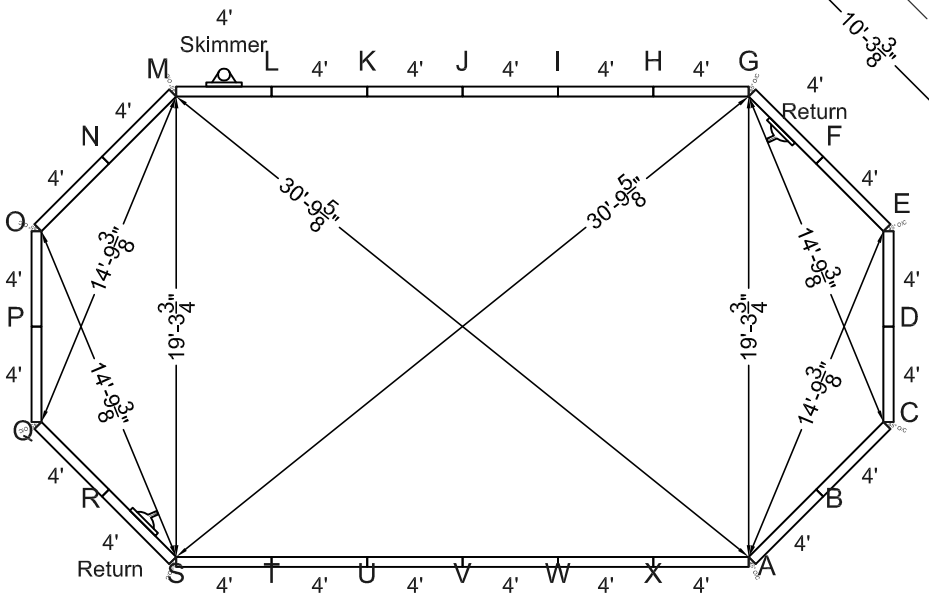

STEEL CHECK

KIT REF# MNB1935-GR-42

MEGNA POOLS

Megna Plastic Packaging Corp.

SIZE: 12'-8" x 23'-8"	SHAPE: MONARCH		HAND: LEFT	DWG# 13X24X10	A
PER.: 64'	S.A.: 244.94 ft²	VOL.: 0.00 gal.us	DATE: 16/12/2010	APPROVED:	
PER.: 19.51 m	S.A.: 22.76 m²	VOL.: 0.00 liters	DRAWN BY: BCC		

ALL DIMENSIONS ARE FINISHED

MANUFACTURING NOTICE

1- DUE TO UNCERTAIN GROUND VARIANCES POOL WALLS MUST BE INSTALLED A MINIMUM OF 6 INCHES BELOW GRADE
2- BUTTRESS SUPPORTS MUST BE FULLY SUPPORTED INCLUDING SONO TUBES BELOW FROST LEVEL. (4 FEET)
3- 12 INCH CONCRETE COLLAR MINIMUM 24 INCHES PAST STRAIGHT SIDES.
4- FILL REMOVED, TO BE SLOPED AROUND OUTSIDE PERIMETER.

NONCOMPLIANCE VOIDS WARRANTY

5- ALL BARTOP PANELS AVAILABLE IN 42" TO 48" PANEL HEIGHTS.

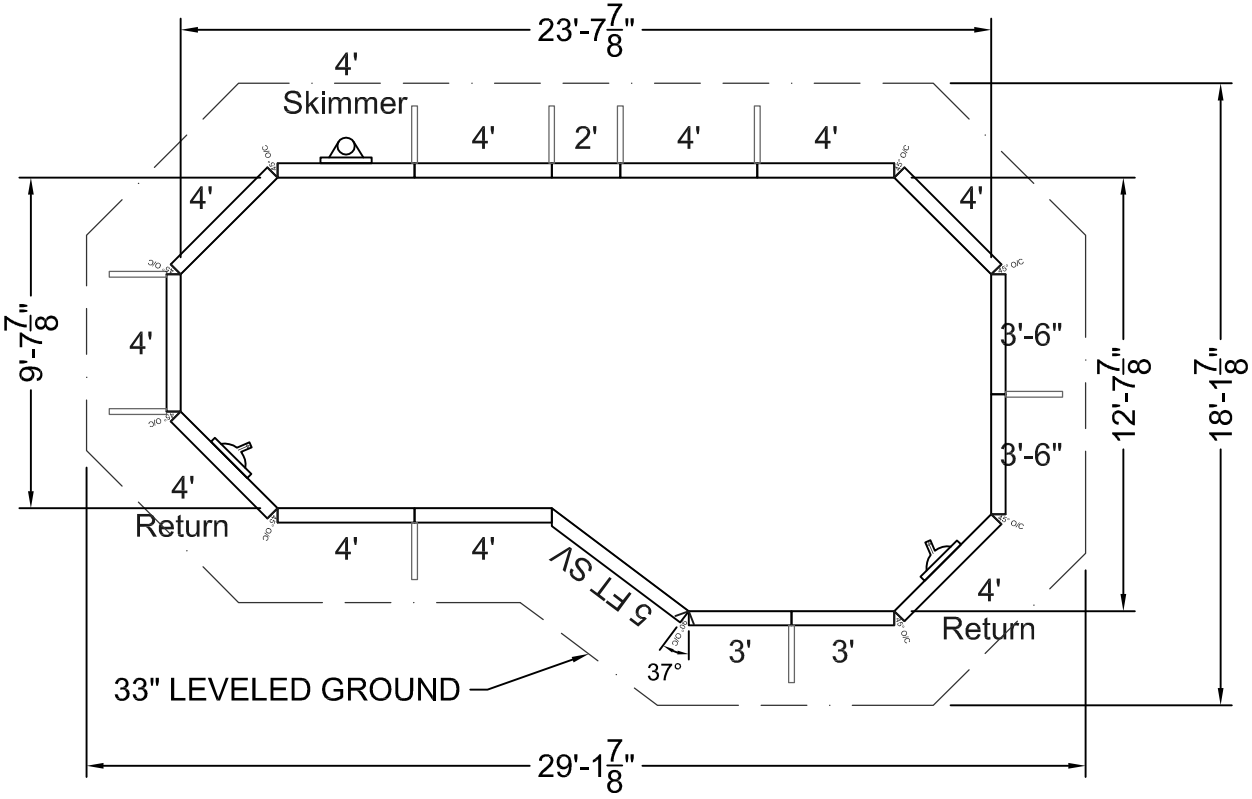

DESCRIPTION	QTY
2' STR	1
3' STR	2
3'-6" STR	2
4' STR	8
4' STR RTN	2
4' STR SKM	1
5 FT SV	1
45° O/C	8
37° O/C	1
BUTTRESS SUPPORTS	9
STD HARDWARE PACK	1

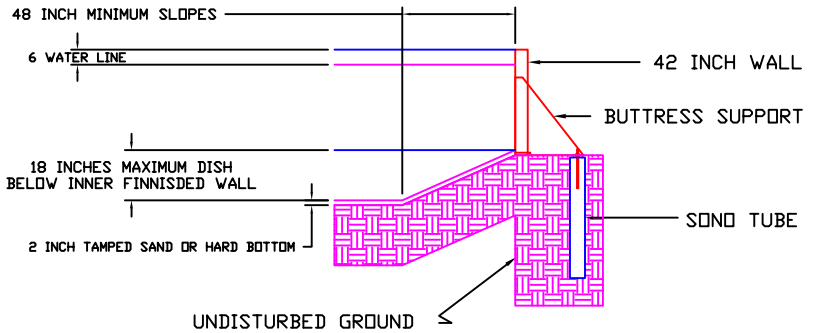

ONGROUND BARTOP POOLS

KIT REF# MNB1324LMO-42

MEGNA POOLS

Megna Plastic Packaging Corp.

SIZE:	SHAPE:		HAND:	DWG#	
12'-8" x 23'-8"	MONARCH		LEFT	13X24X10	B
PER.: 64'	S.A.: 244.94 ft²	VOL.: 0.00 gal.us	DATE: 16/12/2010	APPROVED:	
PER.: 19.51 m	S.A.: 22.76 m²	VOL.: 0.00 liters	DRAWN BY: BCC		

STAKE OUT

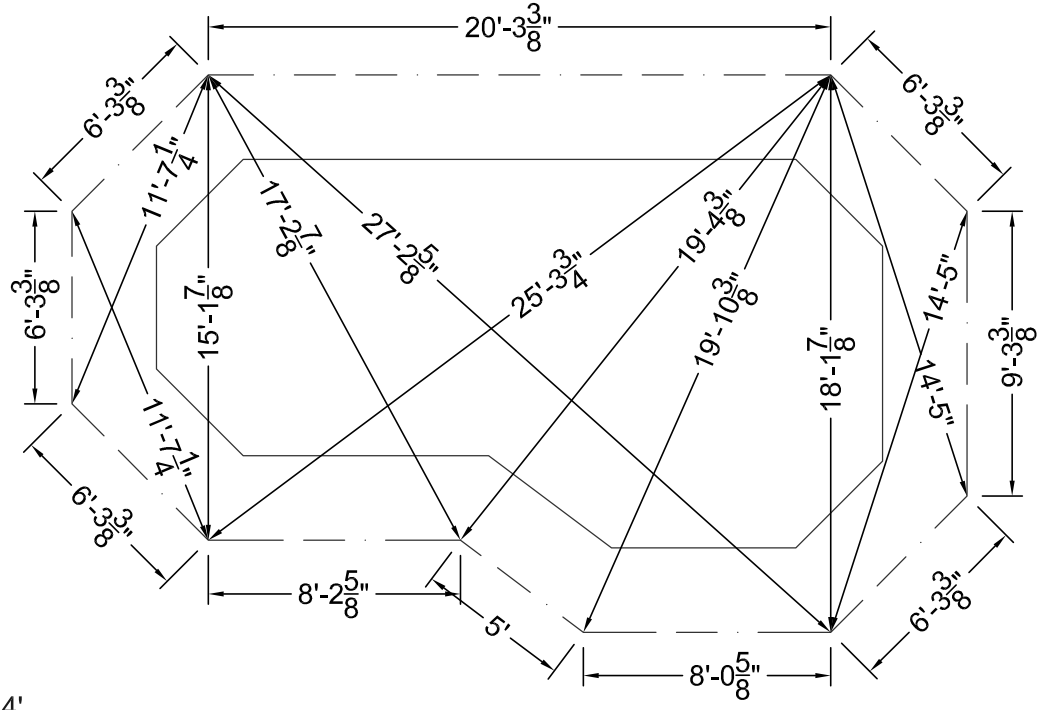

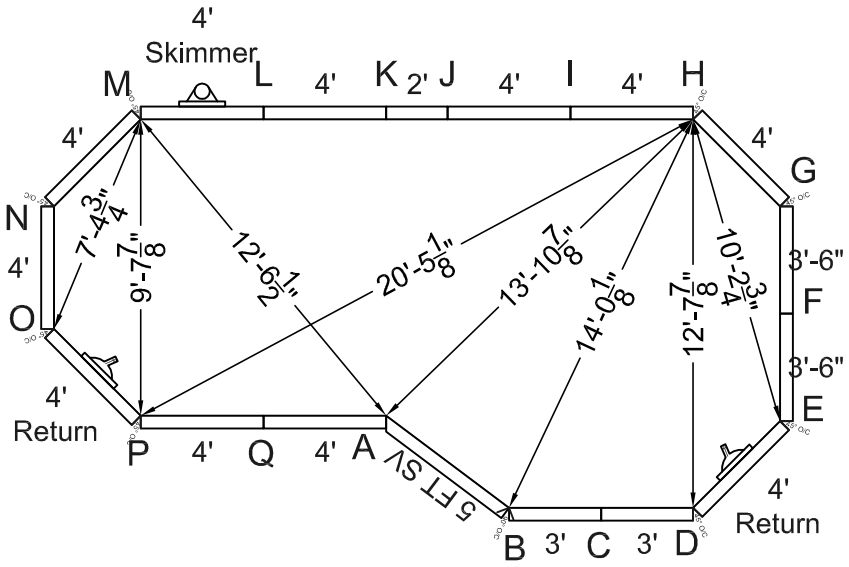

STEEL CHECK

KIT REF# MNB1324LMO-42

MEGNA POOLS
Megna Plastic Packaging Corp.

SIZE: 12'-8" x 23'-8"	SHAPE: MONARCH		HAND: RIGHT	DWG# 13X24X10	A
PER.: 64'	S.A.: 244.94 ft²	VOL.: 0.00 gal.us	DATE: 16/12/2010	APPROVED:	
PER.: 19.51 m	S.A.: 22.76 m²	VOL.: 0.00 liters	DRAWN BY: BCC		

ALL DIMENSIONS ARE FINISHED

MANUFACTURING NOTICE

1- DUE TO UNCERTAIN GROUND VARIANCES POOL WALLS MUST BE INSTALLED A MINIMUM OF 6 INCHES BELOW GRADE
2- BUTTRESS SUPPORTS MUST BE FULLY SUPPORTED INCLUDING SONO TUBES BELOW FROST LEVEL. (4 FEET)
3- 12 INCH CONCRETE COLLAR MINIMUM 24 INCHES PAST STRAIGHT SIDES.
4- FILL REMOVED, TO BE SLOPED AROUND OUTSIDE PERIMETER.

NONCOMPLIANCE VOIDS WARRANTY

5- ALL BARTOP PANELS AVAILABLE IN 42" TO 48" PANEL HEIGHTS.

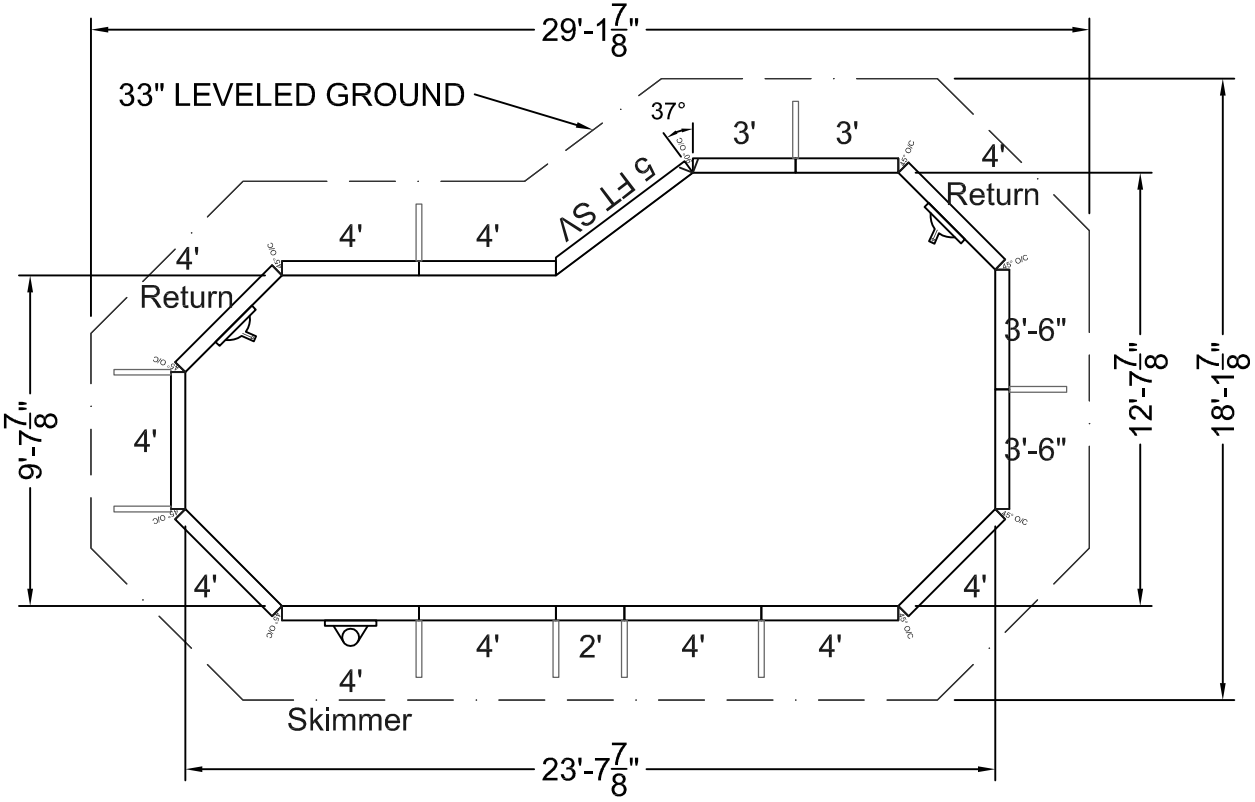

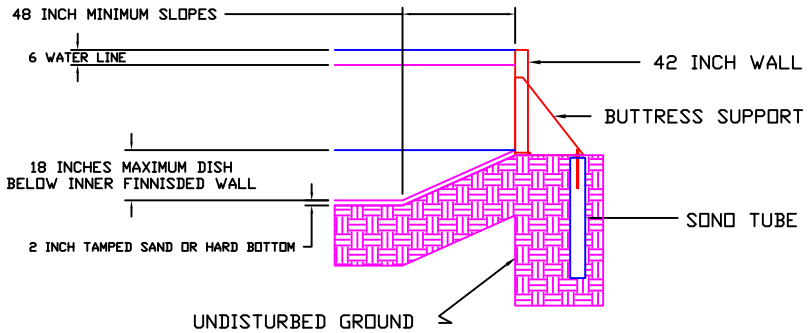

DESCRIPTION	QTY
2' STR	1
3' STR	2
3'-6" STR	2
4' STR	8
4' STR RTN	2
4' STR SKM	1
5 FT SV	1
45° O/C	8
37° O/C	1
BUTTRESS SUPPORTS	9
STD HARDWARE PACK	1

ONGROUND BARTOP POOLS

KIT REF# MNB1324RMO-42

MEGNA POOLS

Megna Plastic Packaging Corp.

SIZE: 12'-8" x 23'-8"	SHAPE: MONARCH		HAND: RIGHT	DWG# 13X24X10 B
PER.: 64'	S.A.: 244.94 ft²	VOL.: 0.00 gal.us	DATE: 16/12/2010	APPROVED:
PER.: 19.51 m	S.A.: 22.76 m²	VOL.: 0.00 liters	DRAWN BY: BCC	

STAKE OUT

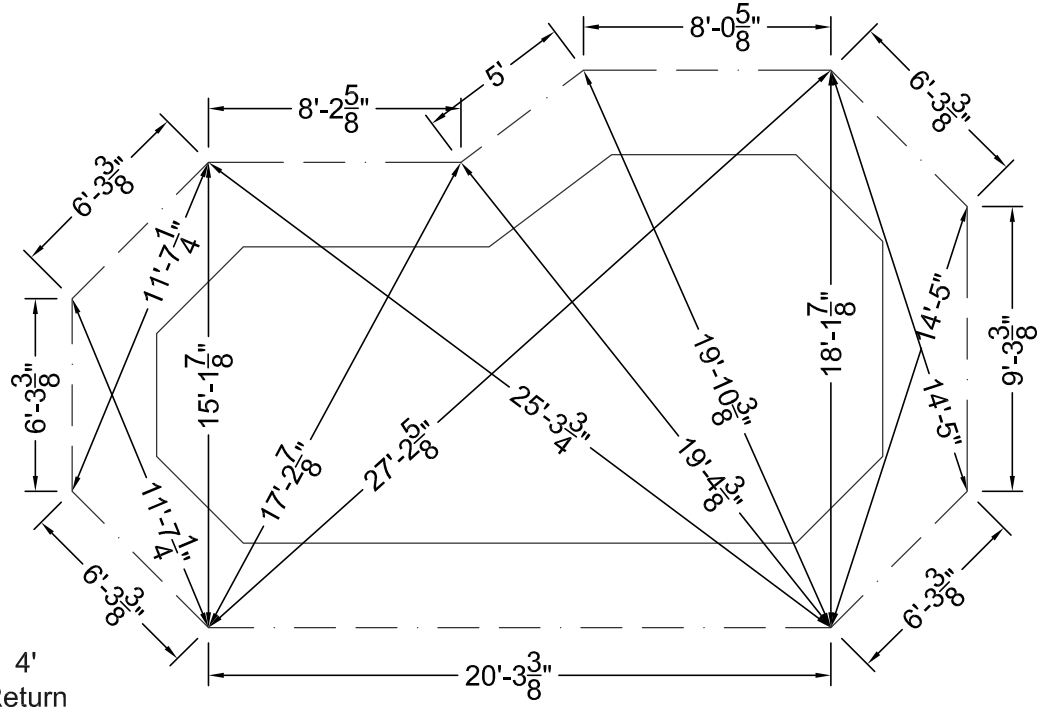

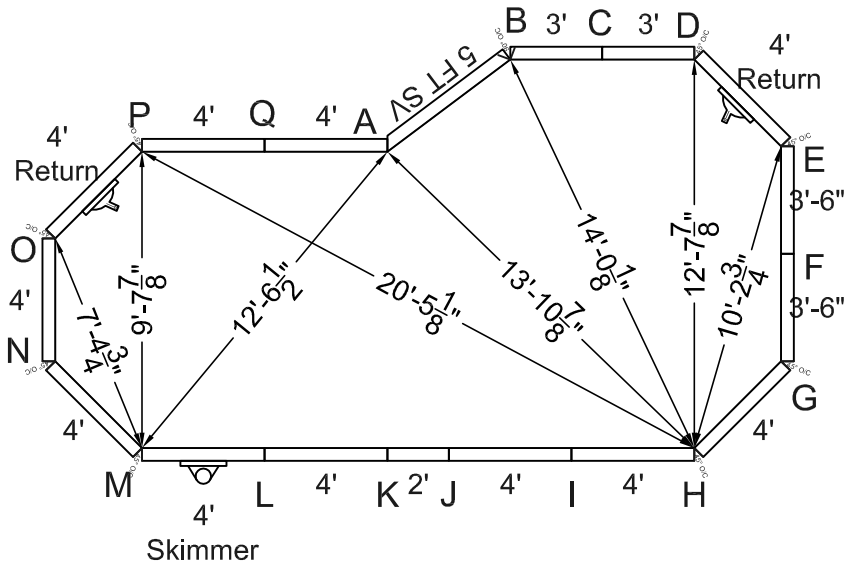

STEEL CHECK

KIT REF# MNB1324RMO-42

MEGNA POOLS
Megna Plastic Packaging Corp.

SIZE:	SHAPE:	HAND:	DWG#	
15'-6" x 32'-6"	MONARCH	LEFT	16X32X13	A

PER.:	84'	S.A.:	412.32 ft²	VOL.:	0.00 gal.us	DATE: 16/12/2010	APPROVED:
PER.:	25.60 m	S.A.:	38.31 m²	VOL.:	0.00 liters	DRAWN BY: BCC	

ALL DIMENSIONS ARE FINISHED

MANUFACTURING NOTICE

1- DUE TO UNCERTAIN GROUND VARIANCES POOL WALLS MUST BE INSTALLED A MINIMUM OF 6 INCHES BELOW GRADE
2- BUTTRESS SUPPORTS MUST BE FULLY SUPPORTED INCLUDING SONO TUBES BELOW FROST LEVEL. (4 FEET)
3- 12 INCH CONCRETE COLLAR MINIMUM 24 INCHES PAST STRAIGHT SIDES.
4- FILL REMOVED, TO BE SLOPED AROUND OUTSIDE PERIMETER.

NONCOMPLIANCE VOIDS WARRANTY

5- ALL BARTOP PANELS AVAILABLE IN 42" TO 48" PANEL HEIGHTS.

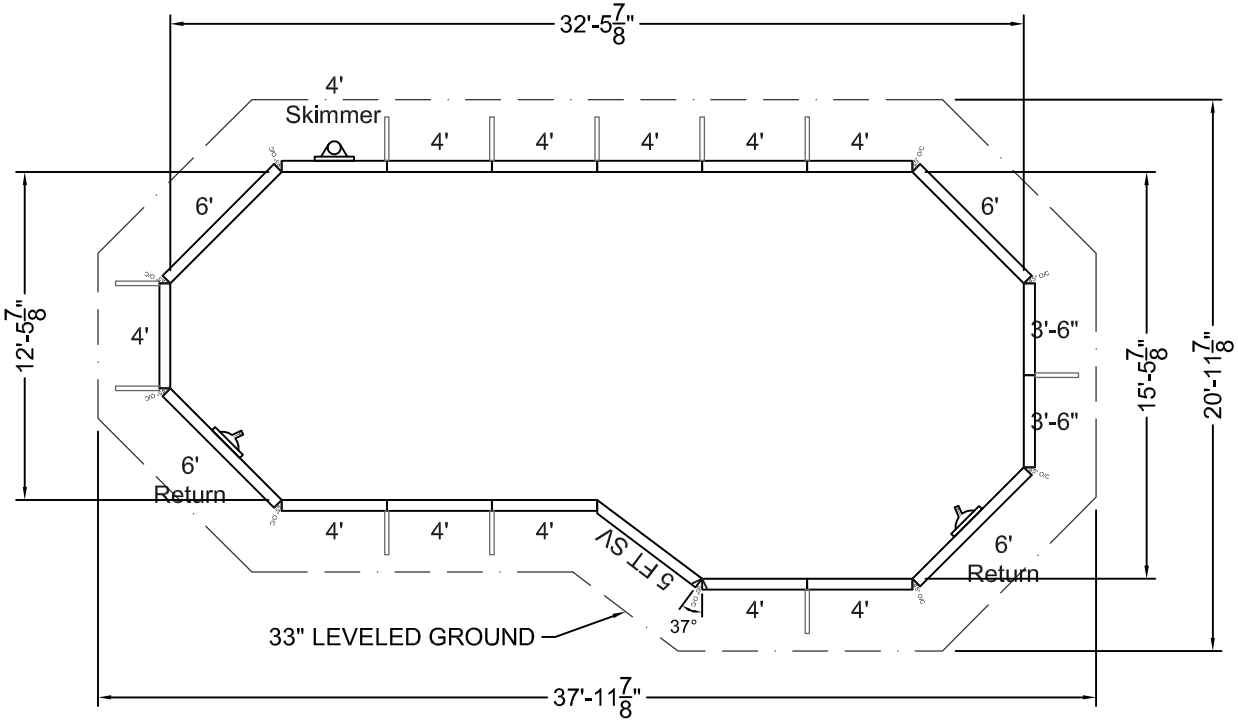

DESCRIPTION	QTY
3'-6" STR	2
4' STR	11
4' STR SKM	1
6' STR	2
6' STR RTN	2
5 FT SV	1
45° O/C	8
37° O/C	1
BUTTRESS SUPPORTS	11
STD HARDWARE PACK	1

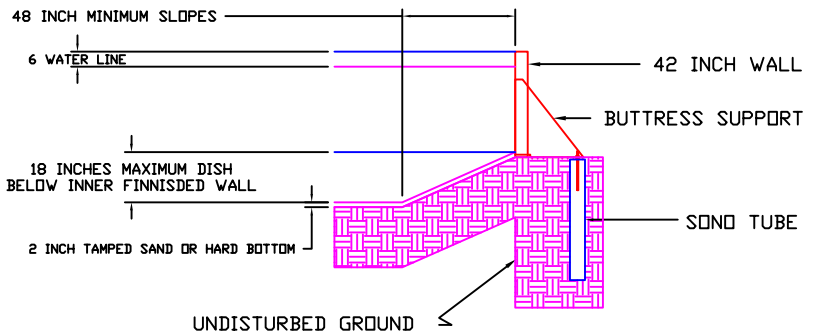

ONGROUND BARTOP POOLS

KIT REF# MNB1632LMO-42

MEGNA POOLS

Megna Plastic Packaging Corp.

SIZE:		SHAPE:			HAND:	DWG#	
15'-6" x 32'-6"		MONARCH			LEFT	16X32X13	B
PER.:	84'	S.A.:	412.32 ft²	VOL.: 0.00 gal.us	DATE: 16/12/2010	APPROVED:	
PER.:	25.60 m	S.A.:	38.31 m²	VOL.: 0.00 liters	DRAWN BY: BCC		

STAKE OUT

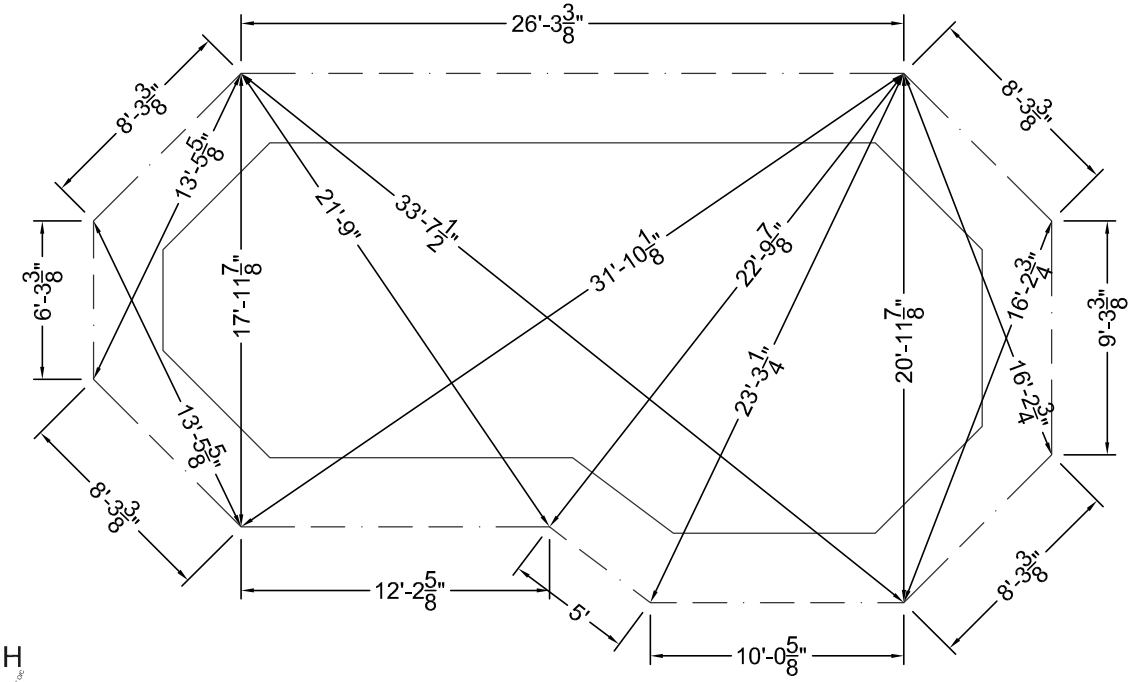

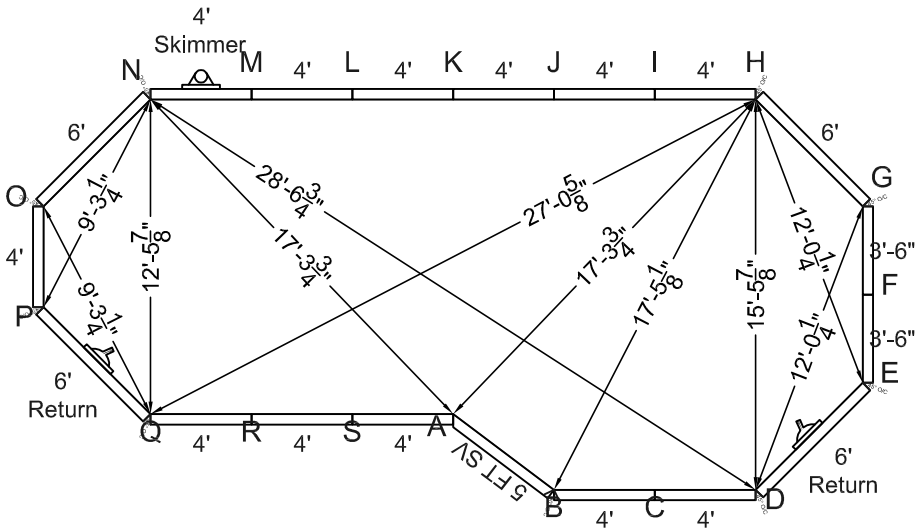

STEEL CHECK

KIT REF# MNB1632LMO-42

MEGNA POOLS
Megna Plastic Packaging Corp.

SIZE:	SHAPE:	HAND:	DWG#	
15'-6" x 32'-6"	MONARCH	RIGHT	16X32X13	A

PER.:	84'	S.A.:	412.32 ft²	VOL.:	0.00 gal.us	DATE: 16/12/2010	APPROVED:
PER.:	25.60 m	S.A.:	38.31 m²	VOL.:	0.00 liters	DRAWN BY: BCC	

ALL DIMENSIONS ARE FINISHED

MANUFACTURING NOTICE

1- DUE TO UNCERTAIN GROUND VARIANCES POOL WALLS MUST BE INSTALLED A MINIMUM OF 6 INCHES BELOW GRADE
2- BUTTRESS SUPPORTS MUST BE FULLY SUPPORTED INCLUDING SONO TUBES BELOW FROST LEVEL. (4 FEET)
3- 12 INCH CONCRETE COLLAR MINIMUM 24 INCHES PAST STRAIGHT SIDES.
4- FILL REMOVED, TO BE SLOPED AROUND OUTSIDE PERIMETER.

NONCOMPLIANCE VOIDS WARRANTY

5- ALL BARTOP PANELS AVAILABLE IN 42" TO 48" PANEL HEIGHTS.

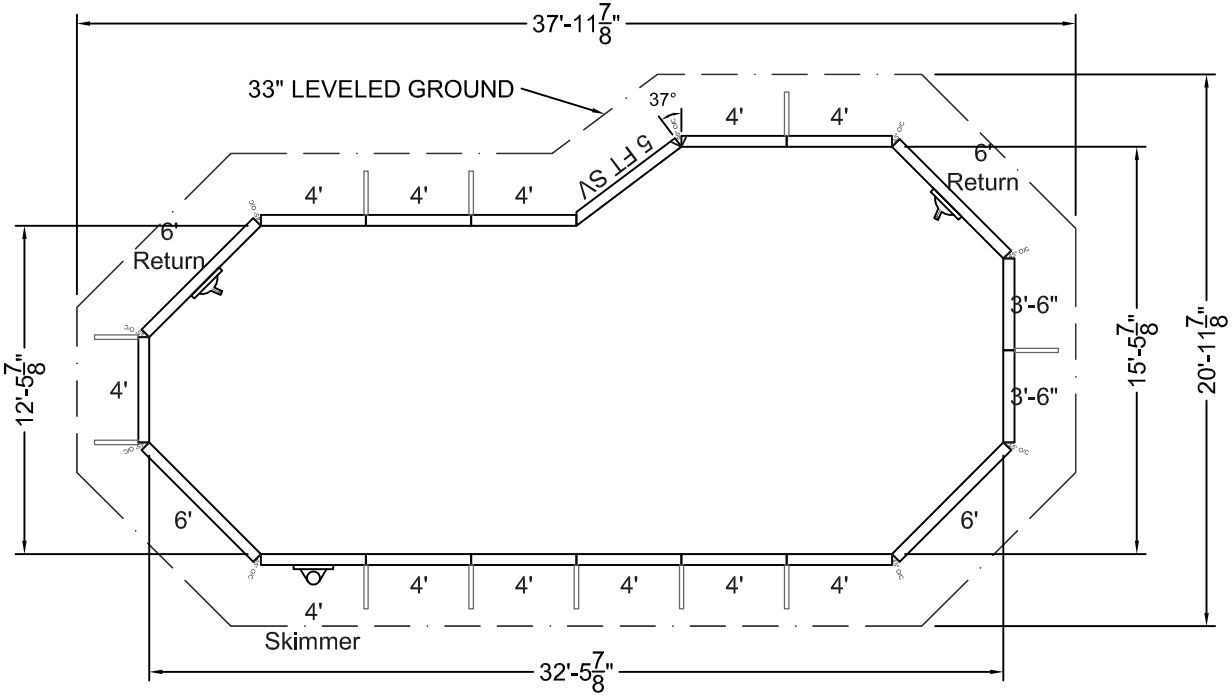

DESCRIPTION	QTY
3'-6" STR	2
4' STR	11
4' STR SKM	1
6' STR	2
6' STR RTN	2
5 FT SV	1
45° O/C	8
37° O/C	1
BUTTRESS SUPPORTS	11
STD HARDWARE PACK	1

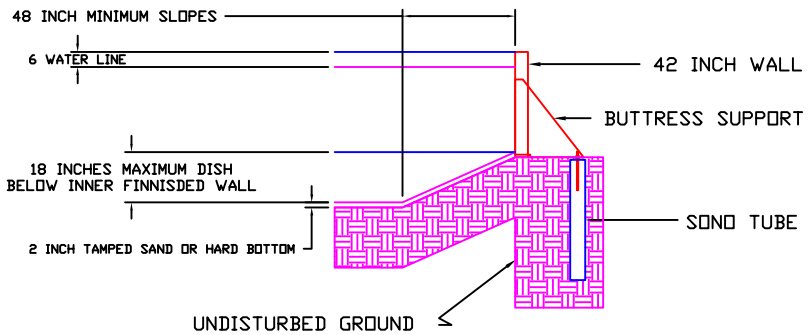

ONGROUND BARTOP POOLS

KIT REF# MNB1632RMO-42

MEGNA POOLS
Megna Plastic Packaging Corp.

SIZE:		SHAPE:			HAND:	DWG#	
15'-6" x 32'-6"		MONARCH			RIGHT	16X32X13	B
PER.:	84'	S.A.:	412.32 ft²	VOL.: 0.00 gal.us	DATE: 16/12/2010	APPROVED:	
PER.:	25.60 m	S.A.:	38.31 m²	VOL.: 0.00 liters	DRAWN BY: BCC		

STAKE OUT

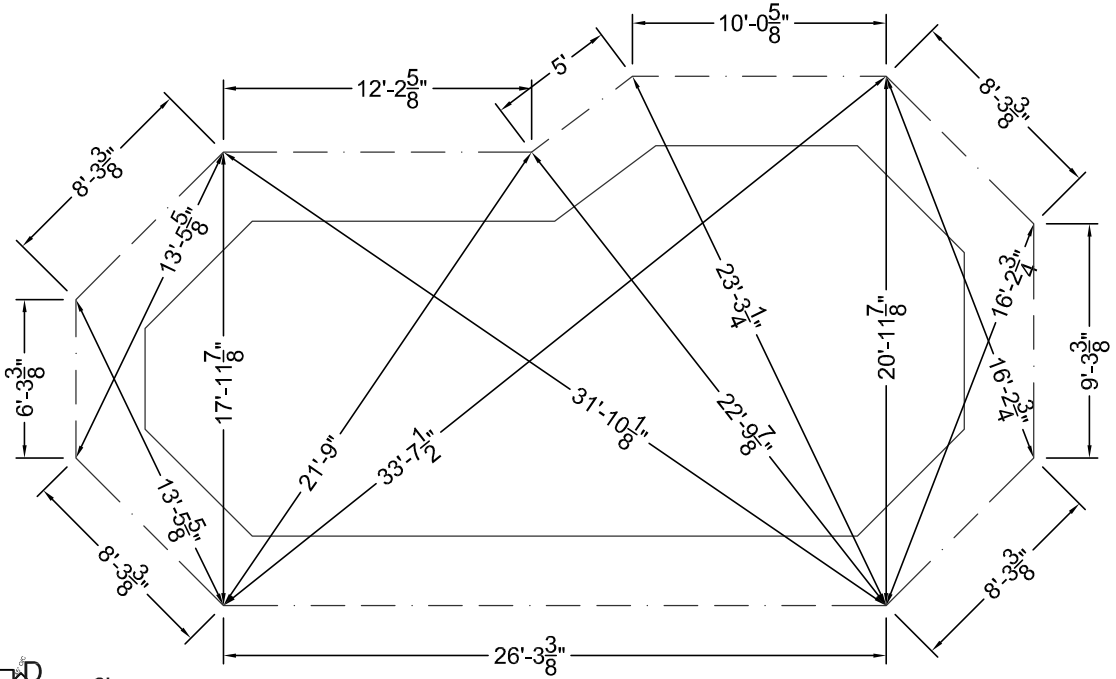

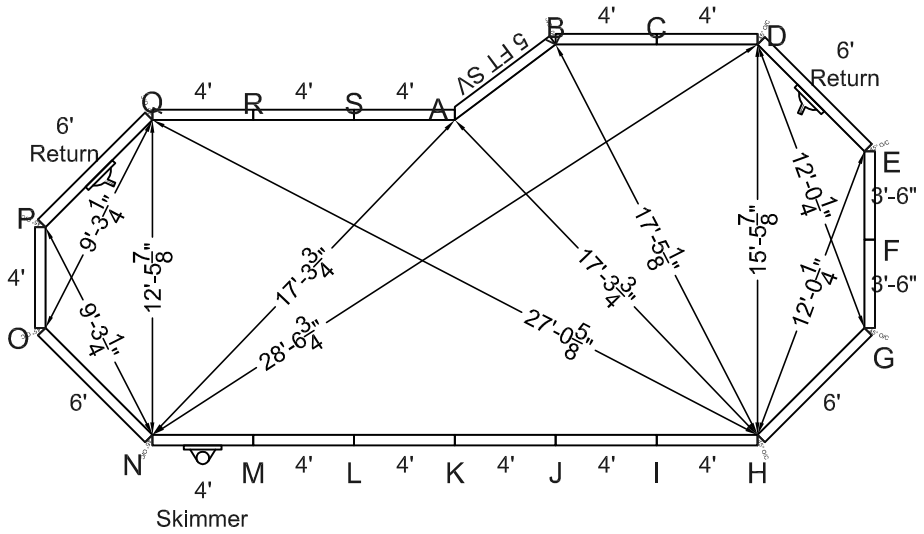

STEEL CHECK

KIT REF# MNB1632RMO-42

MEGNA POOLS
Megna Plastic Packaging Corp.

SIZE:	SHAPE:	HAND:	DWG#	
17'-6" x 32'-6"	MONARCH	LEFT	18X32X15	A

PER.:	88'	S.A.:	477.29 ft²	VOL.:	0.00 gal.us	DATE: 16/12/2010	APPROVED:
PER.:	26.82 m	S.A.:	44.34 m²	VOL.:	0.00 liters	DRAWN BY: BCC	

ALL DIMENSIONS ARE FINISHED

MANUFACTURING NOTICE

1- DUE TO UNCERTAIN GROUND VARIANCES POOL WALLS MUST BE INSTALLED A MINIMUM OF 6 INCHES BELOW GRADE
2- BUTTRESS SUPPORTS MUST BE FULLY SUPPORTED INCLUDING SONO TUBES BELOW FROST LEVEL. (4 FEET)
3- 12 INCH CONCRETE COLLAR MINIMUM 24 INCHES PAST STRAIGHT SIDES.
4- FILL REMOVED, TO BE SLOPED AROUND OUTSIDE PERIMETER.

NONCOMPLIANCE VOIDS WARRANTY

5- ALL BARTOP PANELS AVAILABLE IN 42" TO 48" PANEL HEIGHTS.

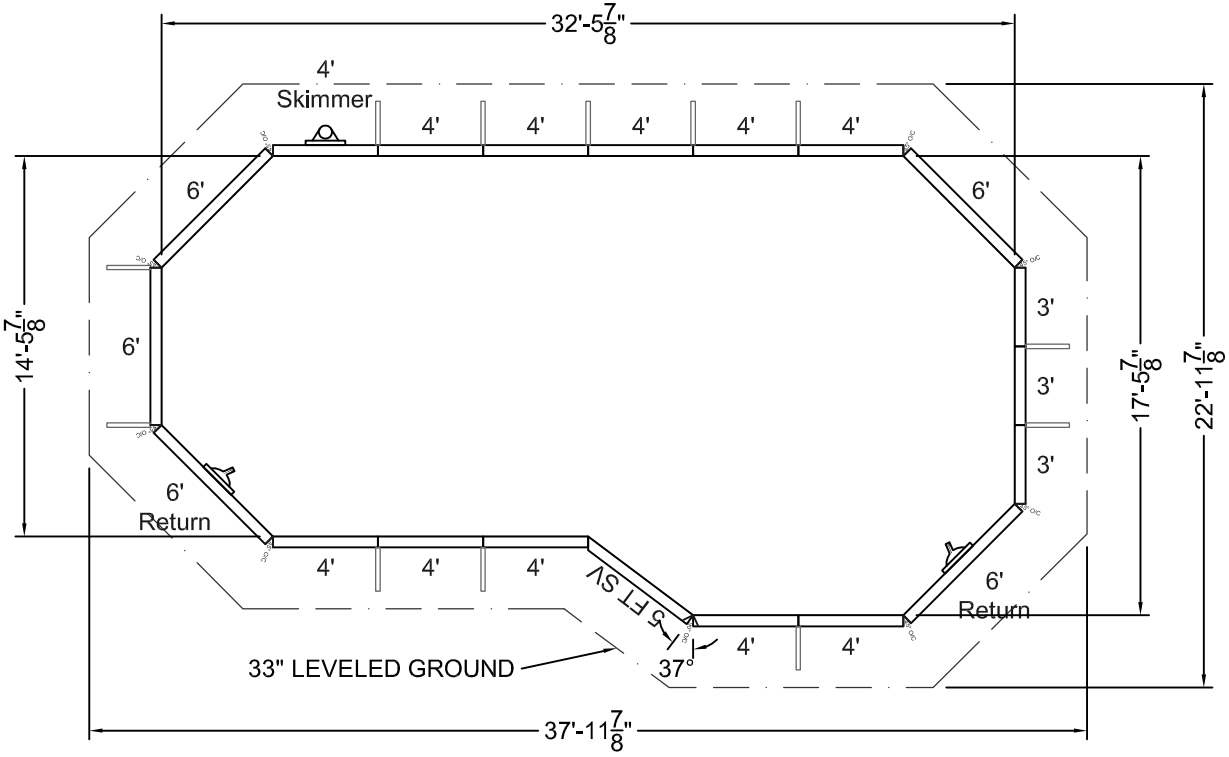

DESCRIPTION	QTY
3' STR	3
4' STR	10
4' STR SKM	1
6' STR	3
6' STR RTN	2
5 FT SV	1
45° O/C	8
37° O/C	1
BUTTRESS SUPPORTS	12
STD HARDWARE PACK	1

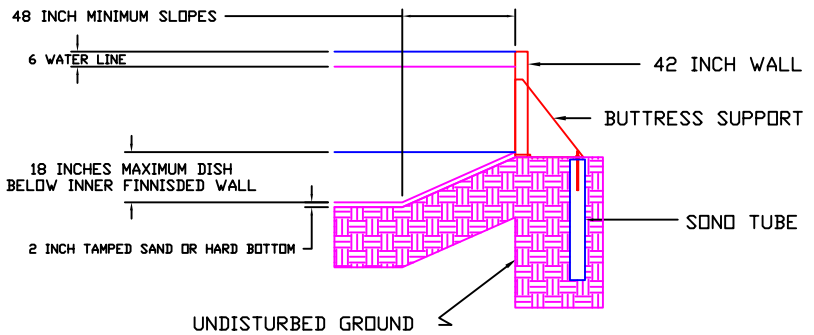

ONGROUND BARTOP POOLS

KIT REF# MNB1832LMO-42

MEGNA POOLS
Megna Plastic Packaging Corp.

SIZE:	SHAPE:		HAND:	DWG#	
17'-6" x 32'-6"	MONARCH		LEFT	18X32X15	B
PER.: 88'	S.A.: 477.29 ft²	VOL.: 0.00 gal.us	DATE: 16/12/2010	APPROVED:	
PER.: 26.82 m	S.A.: 44.34 m²	VOL.: 0.00 liters	DRAWN BY: BCC		

STAKE OUT

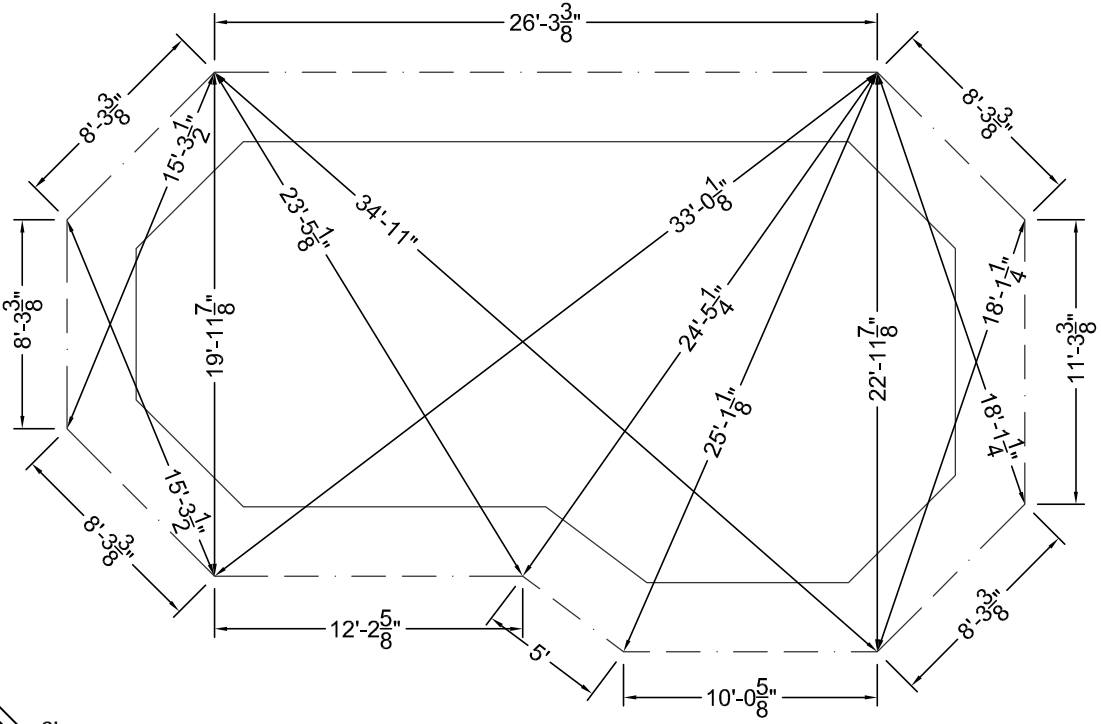

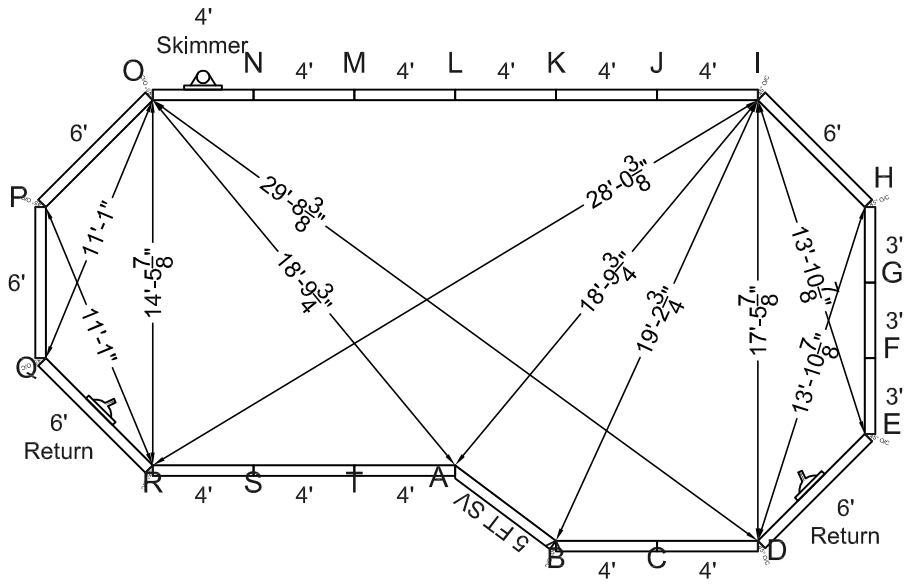

STEEL CHECK

KIT REF# MNB1832LMO-42

MEGNA POOLS

Megna Plastic Packaging Corp.

SIZE:	SHAPE:	HAND:	DWG#	
17'-6" x 32'-6"	MONARCH	RIGHT	18X32X15	A

PER.:	88'	S.A.:	477.29 ft²	VOL.:	0.00 gal.us	DATE: 16/12/2010	APPROVED:
PER.:	26.82 m	S.A.:	44.34 m²	VOL.:	0.00 liters	DRAWN BY: BCC	

ALL DIMENSIONS ARE FINISHED

MANUFACTURING NOTICE

1- DUE TO UNCERTAIN GROUND VARIANCES POOL WALLS MUST BE INSTALLED A MINIMUM OF 6 INCHES BELOW GRADE
2- BUTTRESS SUPPORTS MUST BE FULLY SUPPORTED INCLUDING SONO TUBES BELOW FROST LEVEL. (4 FEET)
3- 12 INCH CONCRETE COLLAR MINIMUM 24 INCHES PAST STRAIGHT SIDES.
4- FILL REMOVED, TO BE SLOPED AROUND OUTSIDE PERIMETER.

NONCOMPLIANCE VOIDS WARRANTY

5- ALL BARTOP PANELS AVAILABLE IN 42" TO 48" PANEL HEIGHTS.

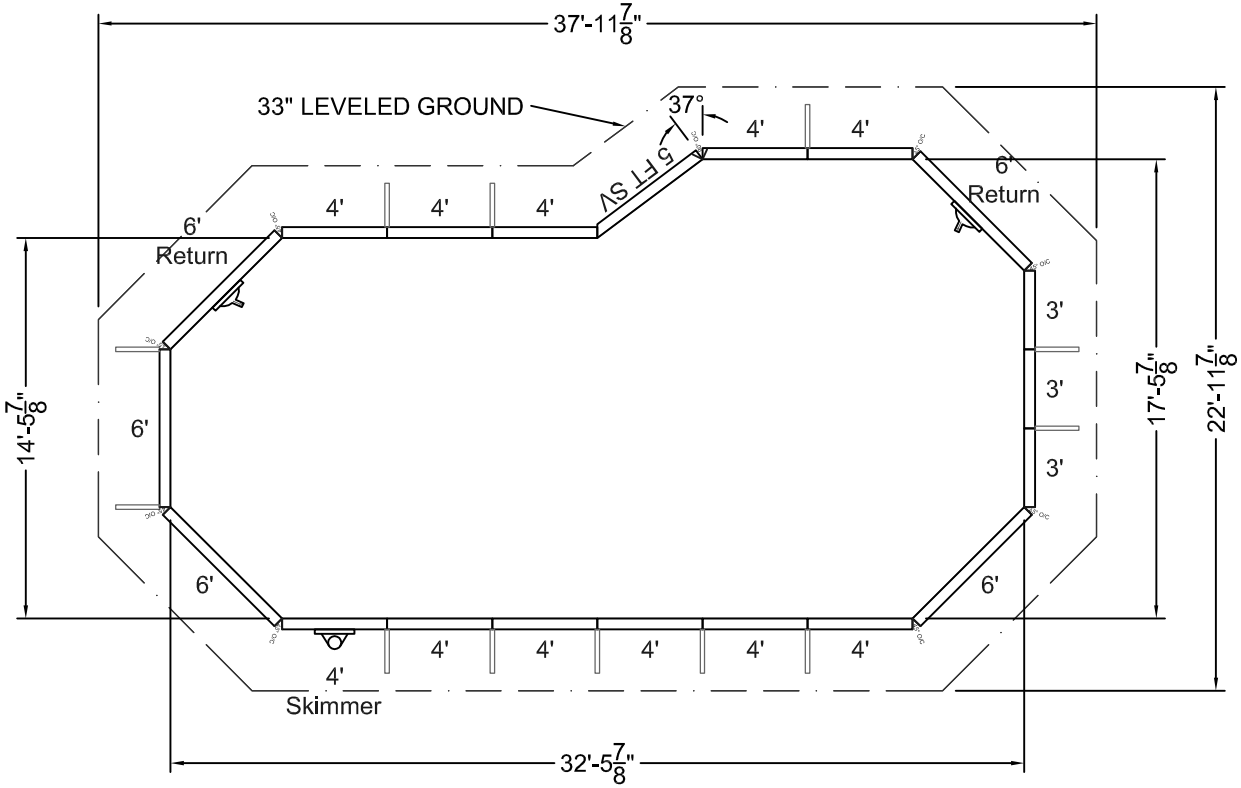

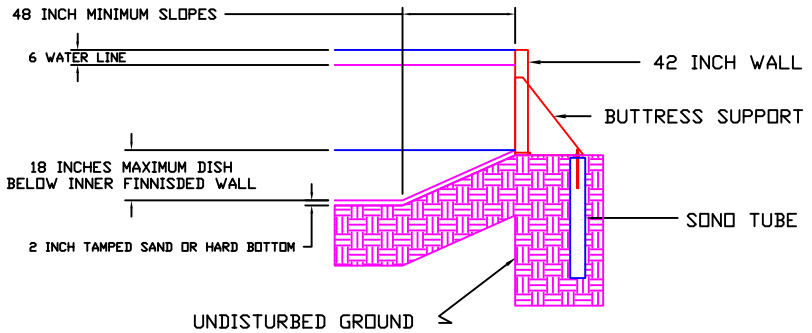

DESCRIPTION	QTY
3' STR	3
4' STR	10
4' STR SKM	1
6' STR	3
6' STR RTN	2
5 FT SV	1
45° O/C	8
37° O/C	1
BUTTRESS SUPPORTS	12
STD HARDWARE PACK	1

ONGROUND BARTOP POOLS

KIT REF# MNB1832RMO-42

MEGNA POOLS

Megna Plastic Packaging Corp.

SIZE:	SHAPE:		HAND:	DWG#	
17'-6" x 32'-6"	MONARCH		RIGHT	18X32X15	B
PER.: 88'	S.A.: 477.29 ft²	VOL.: 0.00 gal.us	DATE: 16/12/2010	APPROVED:	
PER.: 26.82 m	S.A.: 44.34 m²	VOL.: 0.00 liters	DRAWN BY: BCC		

STAKE OUT

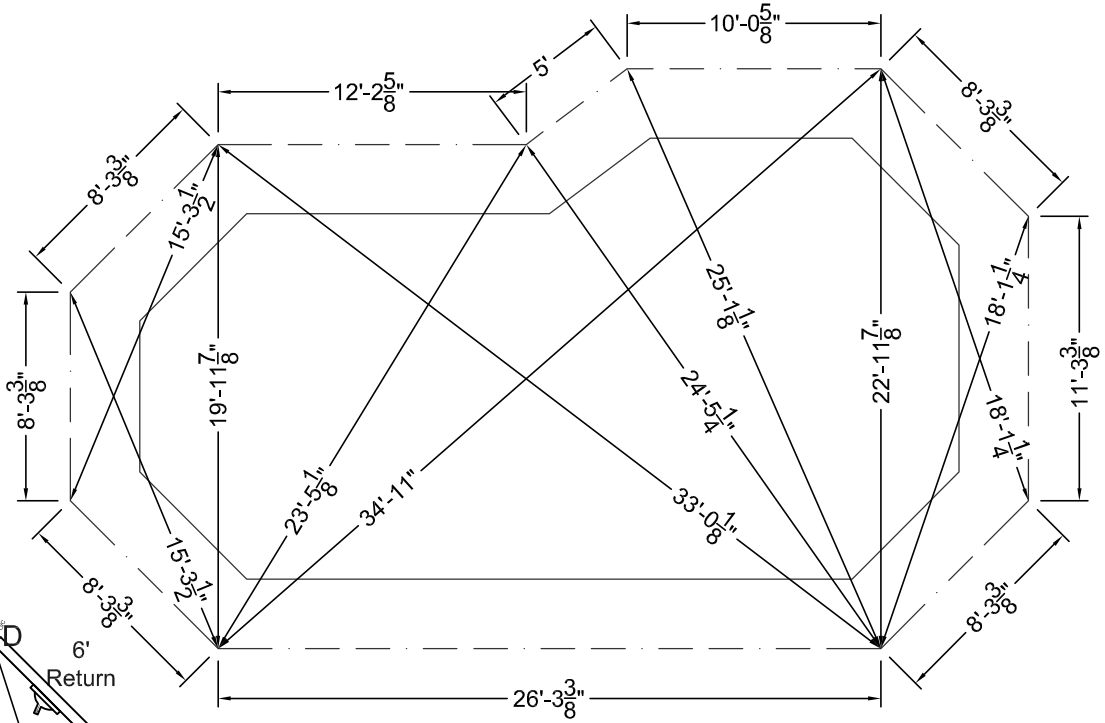

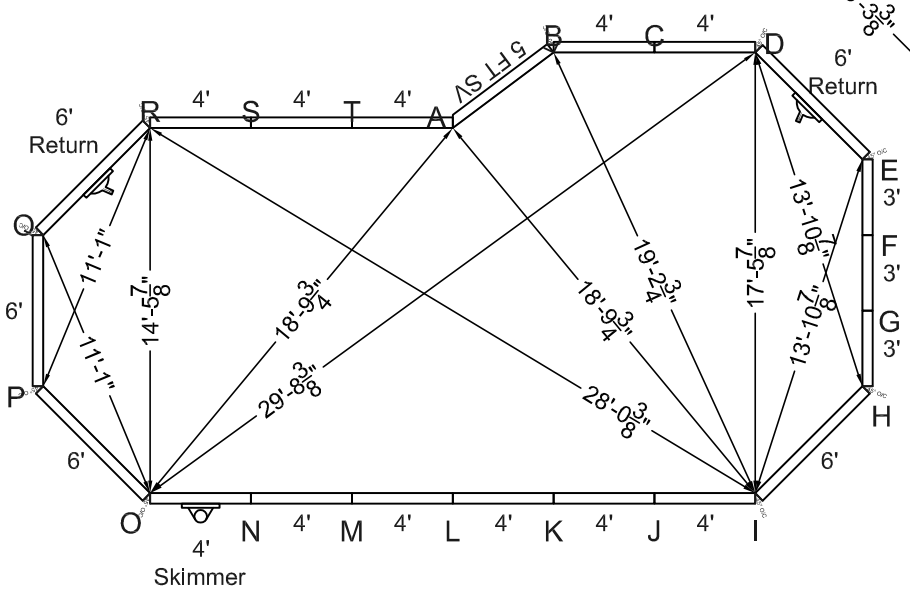

STEEL CHECK

KIT REF# MNB1832RMO-42

MEGNA POOLS
Megna Plastic Packaging Corp.

SIZE: 17'-6" x 36'-6"	SHAPE: MONARCH		HAND: LEFT	DWG# 18X36X15	A
PER.: 96'	S.A.: 535.23 ft²	VOL.: 0.00 gal.us	DATE: 16/12/2010	APPROVED:	
PER.: 29.26 m	S.A.: 49.72 m²	VOL.: 0.00 liters	DRAWN BY: BCC		

ALL DIMENSIONS ARE FINISHED

MANUFACTURING NOTICE

1- DUE TO UNCERTAIN GROUND VARIANCES POOL WALLS MUST BE INSTALLED A MINIMUM OF 6 INCHES BELOW GRADE
2- BUTTRESS SUPPORTS MUST BE FULLY SUPPORTED INCLUDING SONO TUBES BELOW FROST LEVEL. (4 FEET)
3- 12 INCH CONCRETE COLLAR MINIMUM 24 INCHES PAST STRAIGHT SIDES.
4- FILL REMOVED, TO BE SLOPED AROUND OUTSIDE PERIMETER.

NONCOMPLIANCE VOIDS WARRANTY

5- ALL BARTOP PANELS AVAILABLE IN 42" TO 48" PANEL HEIGHTS.

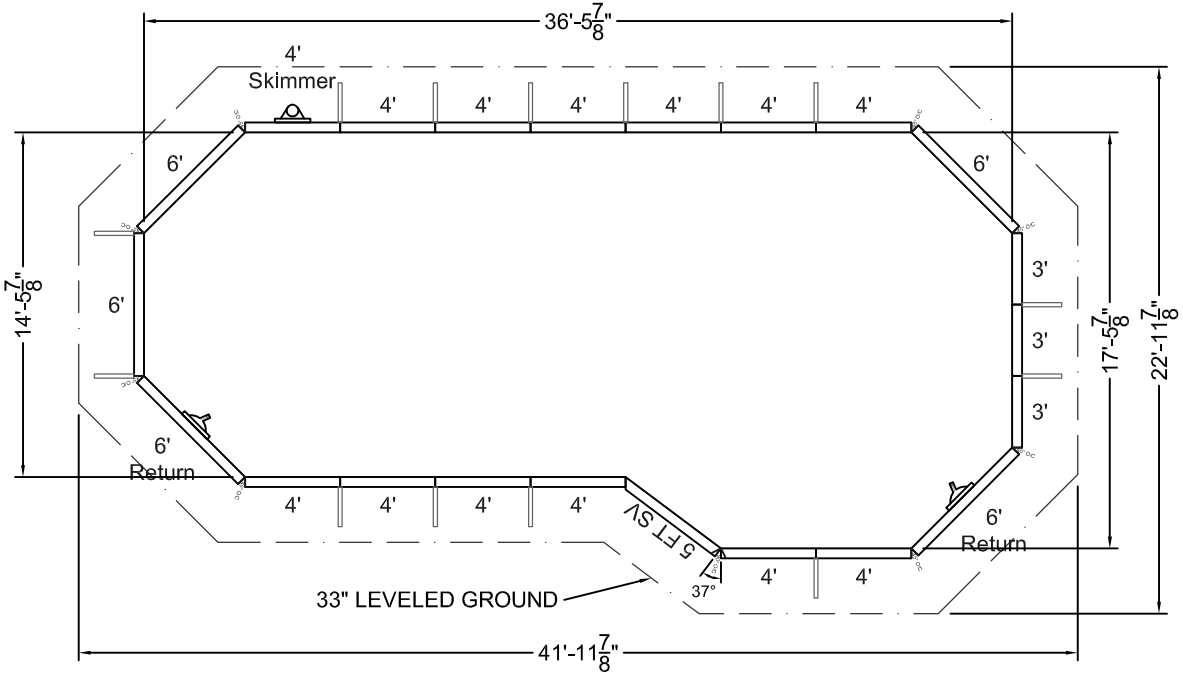

DESCRIPTION	QTY
3' STR	3
4' STR	12
4' STR SKM	1
6' STR	3
6' STR RTN	2
5 FT SV	1
45° O/C	8
37° O/C	1
BUTTRESS SUPPORTS	14
STD HARDWARE PACK	1

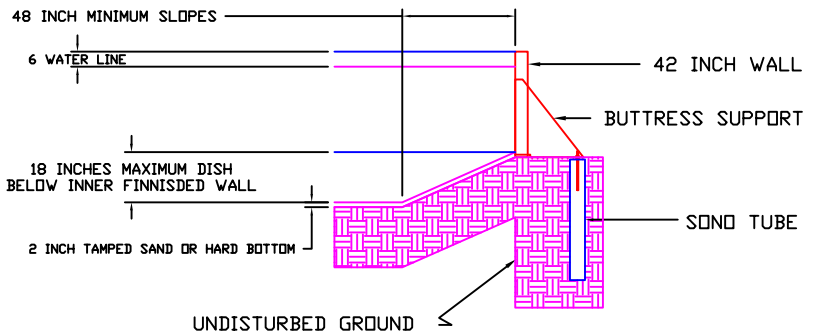

ONGROUND BARTOP POOLS

KIT REF# MNB1836LMO-42

MEGNA POOLS

Megna Plastic Packaging Corp.

SIZE:	SHAPE:	HAND:	DWG#	
17'-6" x 36'-6"	MONARCH	LEFT	18X36X15	B

PER.:	96'	S.A.:	535.23 ft²	VOL.:	0.00 gal.us	DATE: 16/12/2010	APPROVED:
PER.:	29.26 m	S.A.:	49.72 m²	VOL.:	0.00 liters	DRAWN BY: BCC	

STAKE OUT

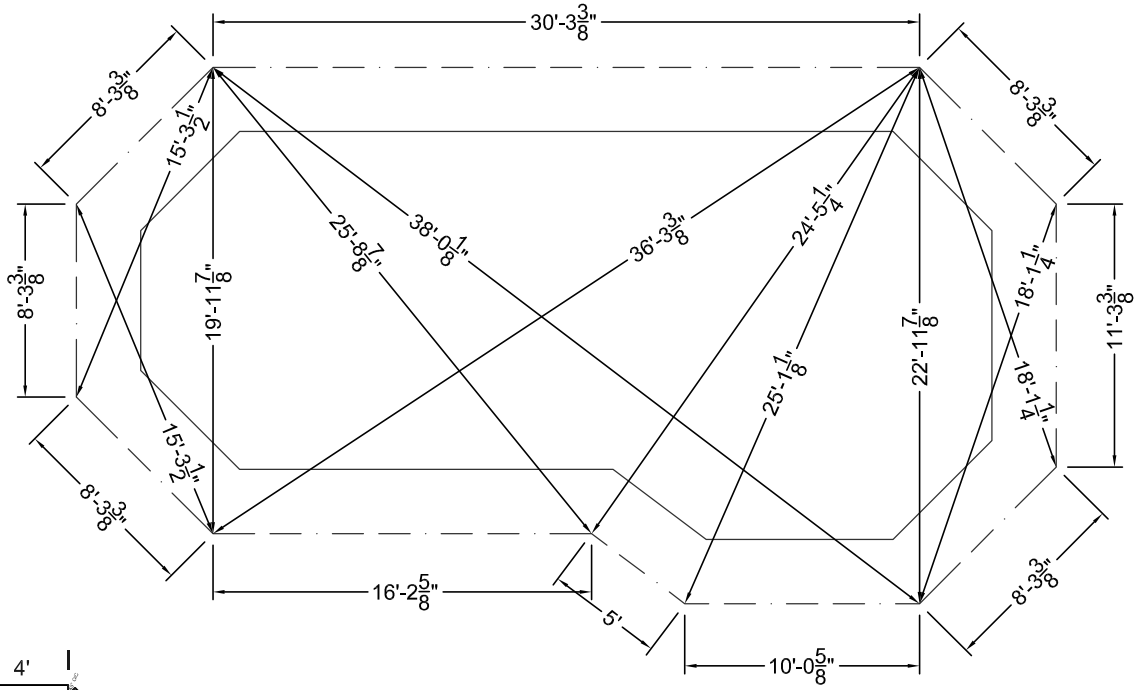

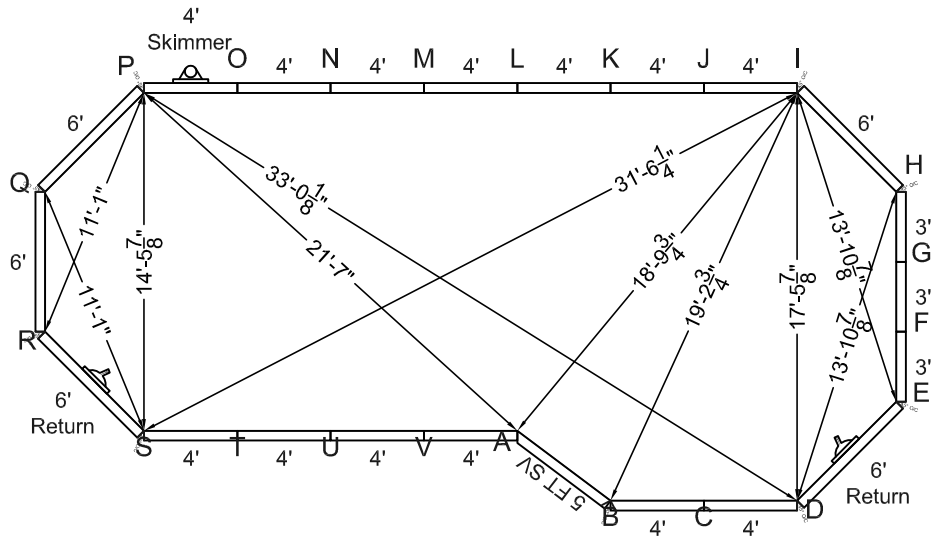

STEEL CHECK

KIT REF# MNB1836LMO-42

MEGNA POOLS

Megna Plastic Packaging Corp.

SIZE:	SHAPE:	HAND:	DWG#	
17'-6" x 36'-6"	MONARCH	RIGHT	18X36X15	A

PER.:	96'	S.A.:	535.23 ft²	VOL.:	0.00 gal.us	DATE: 16/12/2010
PER.:	29.26 m	S.A.:	49.72 m²	VOL.:	0.00 liters	DRAWN BY: BCC

APPROVED:

ALL DIMENSIONS ARE FINISHED

MANUFACTURING NOTICE

1- DUE TO UNCERTAIN GROUND VARIANCES POOL WALLS MUST BE INSTALLED A MINIMUM OF 6 INCHES BELOW GRADE
2- BUTTRESS SUPPORTS MUST BE FULLY SUPPORTED INCLUDING SONO TUBES BELOW FROST LEVEL. (4 FEET)
3- 12 INCH CONCRETE COLLAR MINIMUM 24 INCHES PAST STRAIGHT SIDES.
4- FILL REMOVED, TO BE SLOPED AROUND OUTSIDE PERIMETER.

NONCOMPLIANCE VOIDS WARRANTY

5- ALL BARTOP PANELS AVAILABLE IN 42" TO 48" PANEL HEIGHTS.

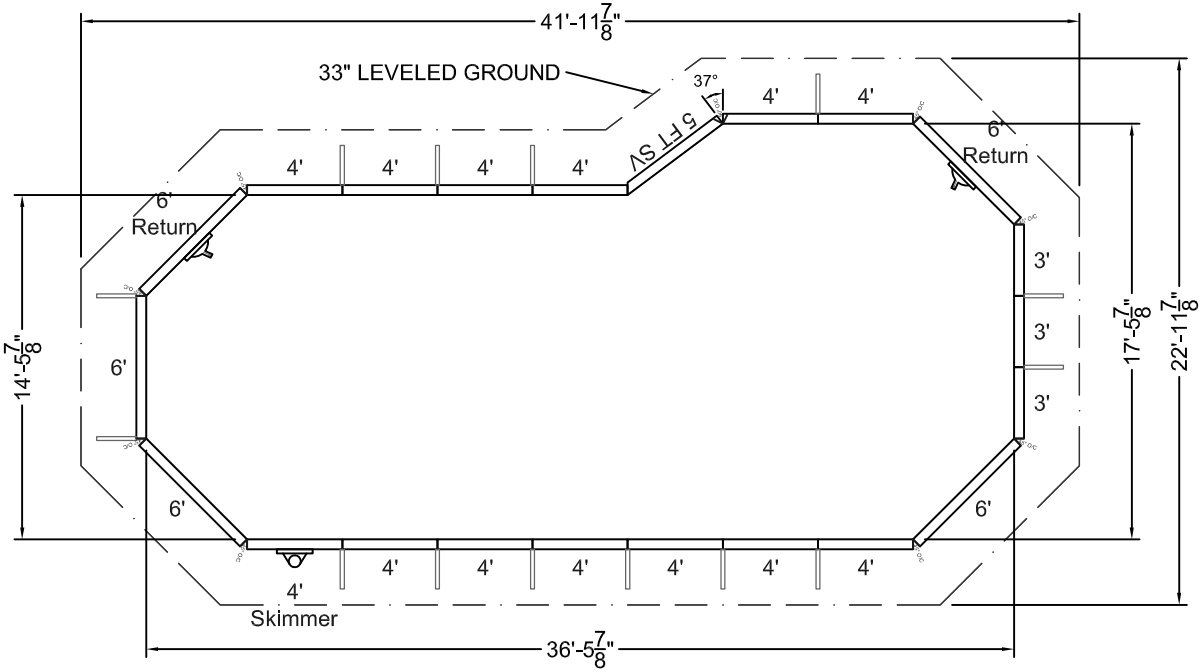

DESCRIPTION	QTY
3' STR	3
4' STR	12
4' STR SKM	1
6' STR	3
6' STR RTN	2
5 FT SV	1
45° O/C	8
37° O/C	1
BUTTRESS SUPPORTS	14
STD HARDWARE PACK	1

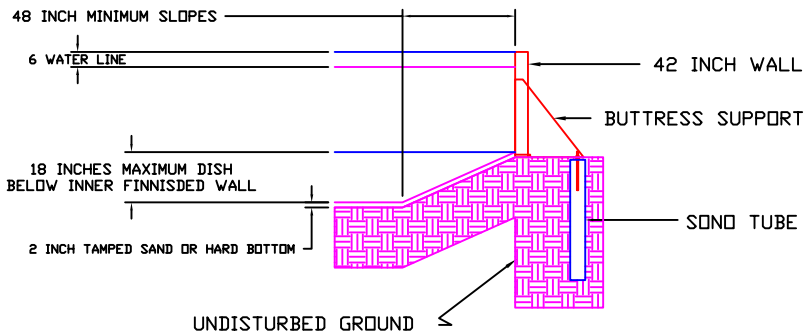

ONGROUND BARTOP POOLS

KIT REF# MNB1836RMO-42

MEGNA POOLS
Megna Plastic Packaging Corp.

SIZE:	SHAPE:		HAND:	DWG#	
17'-6" x 36'-6"	MONARCH		RIGHT	18X36X15	B
PER.: 96'	S.A.: 535.23 ft²	VOL.: 0.00 gal.us	DATE: 16/12/2010	APPROVED:	
PER.: 29.26 m	S.A.: 49.72 m²	VOL.: 0.00 liters	DRAWN BY: BCC		

STAKE OUT

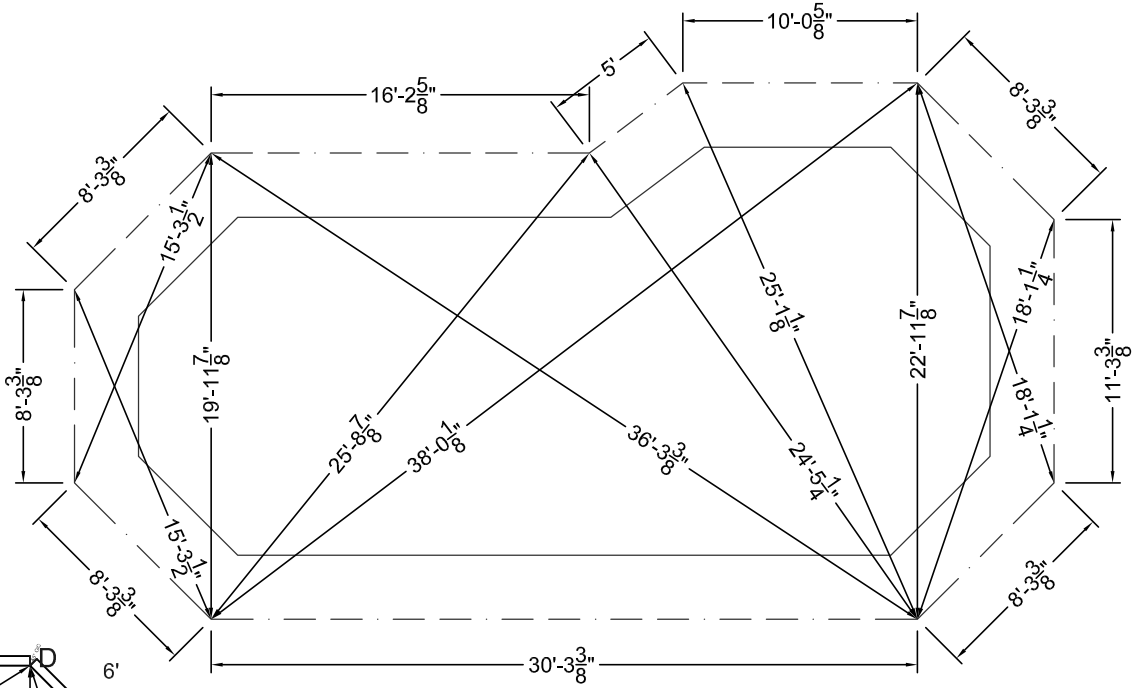

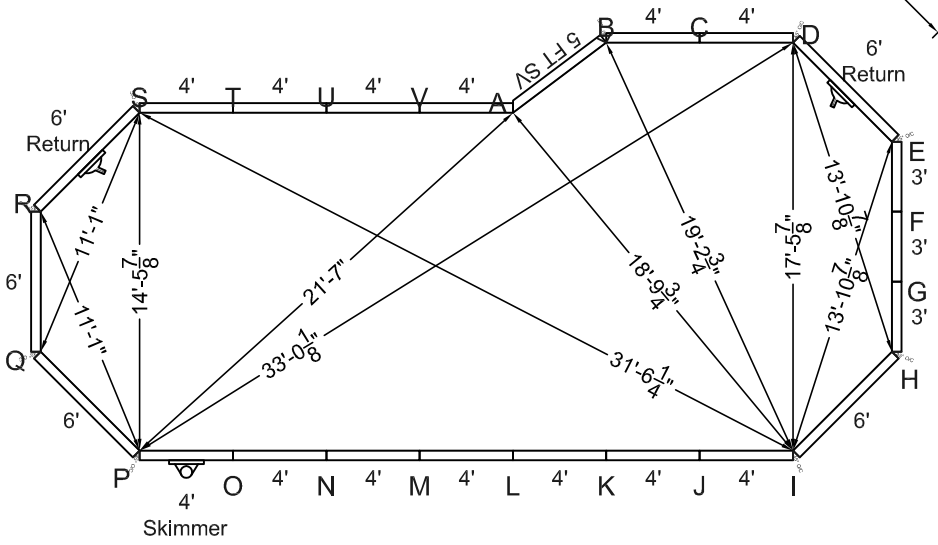

STEEL CHECK

KIT REF# MNB1836RMO-42

MEGNA POOLS
Megna Plastic Packaging Corp.

SIZE: 19'-6" x 38'-6"	SHAPE: MONARCH		HAND: LEFT	DWG# 20X38X17	A
PER.: 104'	S.A.: 647.17 ft²	VOL.: 0.00 gal.us	DATE: 16/12/2010	APPROVED:	
PER.: 31.70 m	S.A.: 60.12 m²	VOL.: 0.00 liters	DRAWN BY: BCC		

ALL DIMENSIONS ARE FINISHED

MANUFACTURING NOTICE

1- DUE TO UNCERTAIN GROUND VARIANCES POOL WALLS MUST BE INSTALLED A MINIMUM OF 6 INCHES BELOW GRADE
2- BUTTRESS SUPPORTS MUST BE FULLY SUPPORTED INCLUDING SONO TUBES BELOW FROST LEVEL. (4 FEET)
3- 12 INCH CONCRETE COLLAR MINIMUM 24 INCHES PAST STRAIGHT SIDES.
4- FILL REMOVED, TO BE SLOPED AROUND OUTSIDE PERIMETER.

NONCOMPLIANCE VOIDS WARRANTY

5- ALL BARTOP PANELS AVAILABLE IN 42" TO 48" PANEL HEIGHTS.

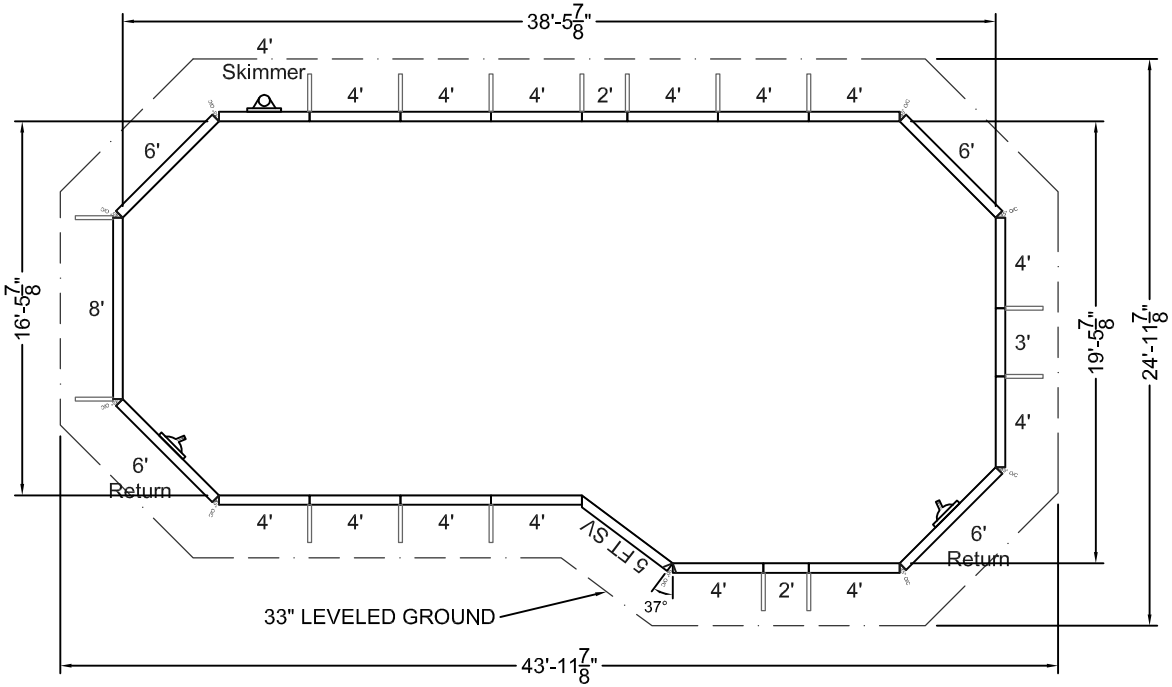

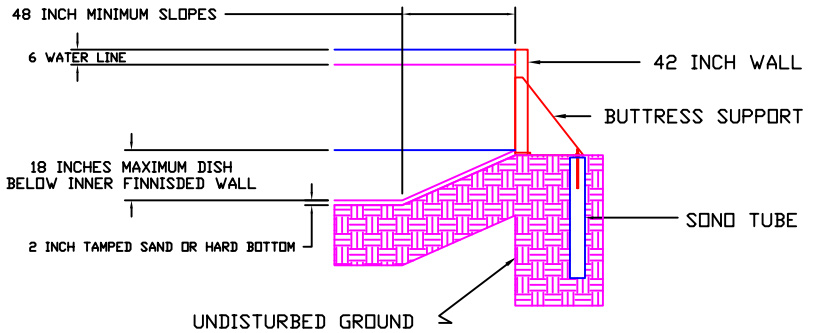

DESCRIPTION	QTY
2' STR	2
3' STR	1
4' STR	14
4' STR SKM	1
6' STR	2
6' STR RTN	2
8' STR	1
5 FT SV	1
45° O/C	8
37° O/C	1
BUTTRESS SUPPORTS	16
STD HARDWARE PACK	1

ONGROUND BARTOP POOLS

KIT REF# MNB2038LMO-42

MEGNA POOLS

Megna Plastic Packaging Corp.

SIZE:	SHAPE:	HAND:	DWG#	
19'-6" x 38'-6"	MONARCH	LEFT	20X38X17	B

PER.:	104'	S.A.:	647.17 ft²	VOL.:	0.00 gal.us	DATE: 16/12/2010	APPROVED:
PER.:	31.70 m	S.A.:	60.12 m²	VOL.:	0.00 liters	DRAWN BY: BCC	

STAKE OUT

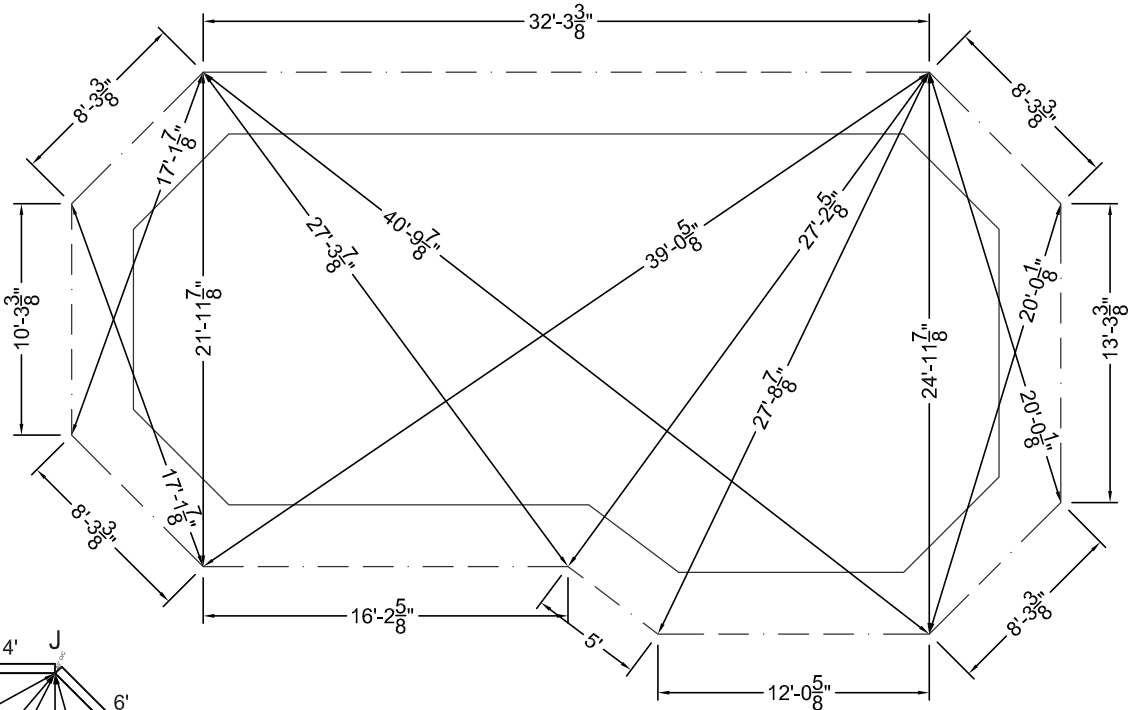

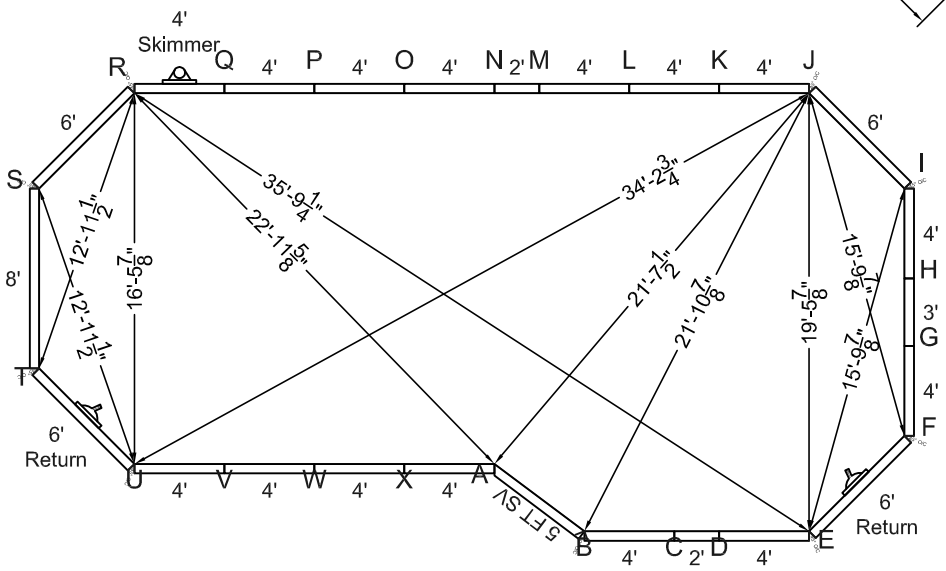

STEEL CHECK

KIT REF# MNB2038LMO-42

MEGNA POOLS

Megna Plastic Packaging Corp.

SIZE: 19'-6" x 38'-6"	SHAPE: MONARCH		HAND: RIGHT	DWG# 20X38X17	A
PER.: 104'	S.A.: 647.17 ft²	VOL.: 0.00 gal.us	DATE: 16/12/2010	APPROVED:	
PER.: 31.70 m	S.A.: 60.12 m²	VOL.: 0.00 liters	DRAWN BY: BCC		

ALL DIMENSIONS ARE FINISHED

MANUFACTURING NOTICE

1- DUE TO UNCERTAIN GROUND VARIANCES POOL WALLS MUST BE INSTALLED A MINIMUM OF 6 INCHES BELOW GRADE
2- BUTTRESS SUPPORTS MUST BE FULLY SUPPORTED INCLUDING SONO TUBES BELOW FROST LEVEL. (4 FEET)
3- 12 INCH CONCRETE COLLAR MINIMUM 24 INCHES PAST STRAIGHT SIDES.
4- FILL REMOVED, TO BE SLOPED AROUND OUTSIDE PERIMETER.

NONCOMPLIANCE VOIDS WARRANTY

5- ALL BARTOP PANELS AVAILABLE IN 42" TO 48" PANEL HEIGHTS.

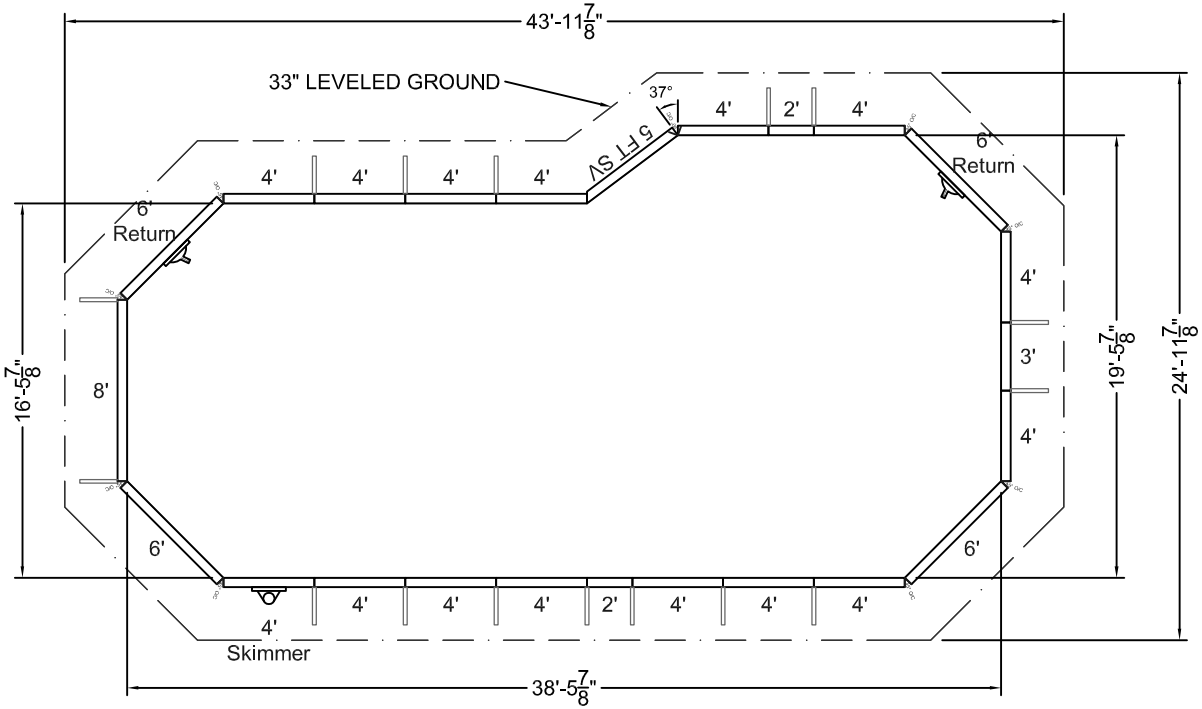

DESCRIPTION	QTY
2' STR	2
3' STR	1
4' STR	14
4' STR SKM	1
6' STR	2
6' STR RTN	2
8' STR	1
5 FT SV	1
45° O/C	8
37° O/C	1
BUTTRESS SUPPORTS	16
STD HARDWARE PACK	1

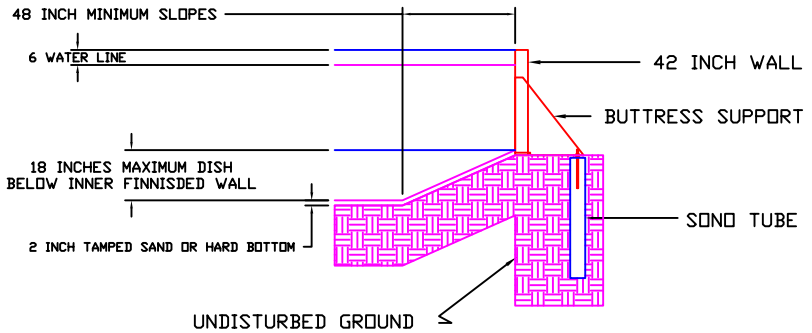

ONGROUND BARTOP POOLS

KIT REF# MNB2038RMO-42

MEGNA POOLS

Megna Plastic Packaging Corp.

SIZE:	SHAPE:	HAND:	DWG#	
19'-6" x 38'-6"	MONARCH	RIGHT	20X38X17	B

PER.:	104'	S.A.:	647.17 ft²	VOL.:	0.00 gal.us	DATE: 16/12/2010
PER.:	31.70 m	S.A.:	60.12 m²	VOL.:	0.00 liters	DRAWN BY: BCC

APPROVED:

STAKE OUT

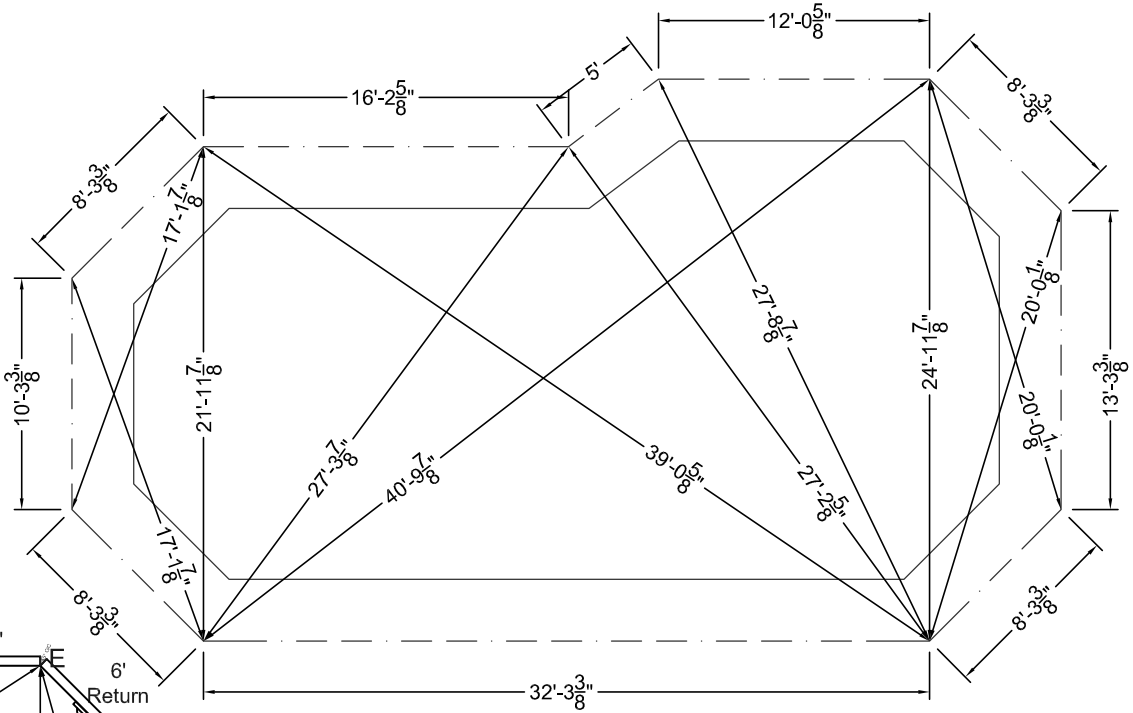

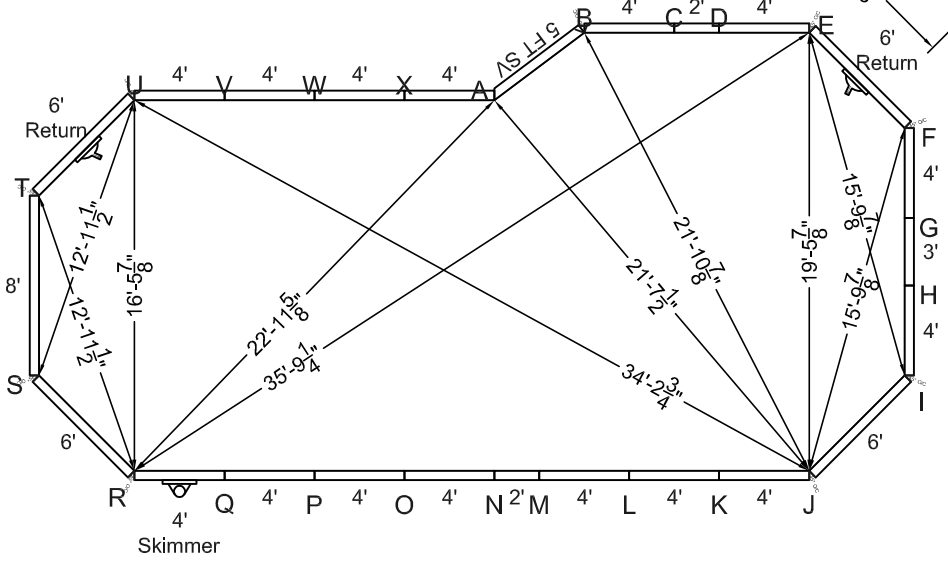

STEEL CHECK

KIT REF# MNB2038RMO-42

MEGNA POOLS
Megna Plastic Packaging Corp.

SIZE: 21'-6" x 40'-6"	SHAPE: MONARCH		HAND: LEFT	DWG# 22X40X19	A
PER.: 112'	S.A.: 767.11 ft²	VOL.: 0.00 gal.us	DATE: 16/12/2010	APPROVED:	
PER.: 34.14 m	S.A.: 71.27 m²	VOL.: 0.00 liters	DRAWN BY: BCC		

ALL DIMENSIONS ARE FINISHED

MANUFACTURING NOTICE

1- DUE TO UNCERTAIN GROUND VARIANCES POOL WALLS MUST BE INSTALLED A MINIMUM OF 6 INCHES BELOW GRADE
2- BUTTRESS SUPPORTS MUST BE FULLY SUPPORTED INCLUDING SONO TUBES BELOW FROST LEVEL. (4 FEET)
3- 12 INCH CONCRETE COLLAR MINIMUM 24 INCHES PAST STRAIGHT SIDES.
4- FILL REMOVED, TO BE SLOPED AROUND OUTSIDE PERIMETER.

NONCOMPLIANCE VOIDS WARRANTY

5- ALL BARTOP PANELS AVAILABLE IN 42" TO 48" PANEL HEIGHTS.

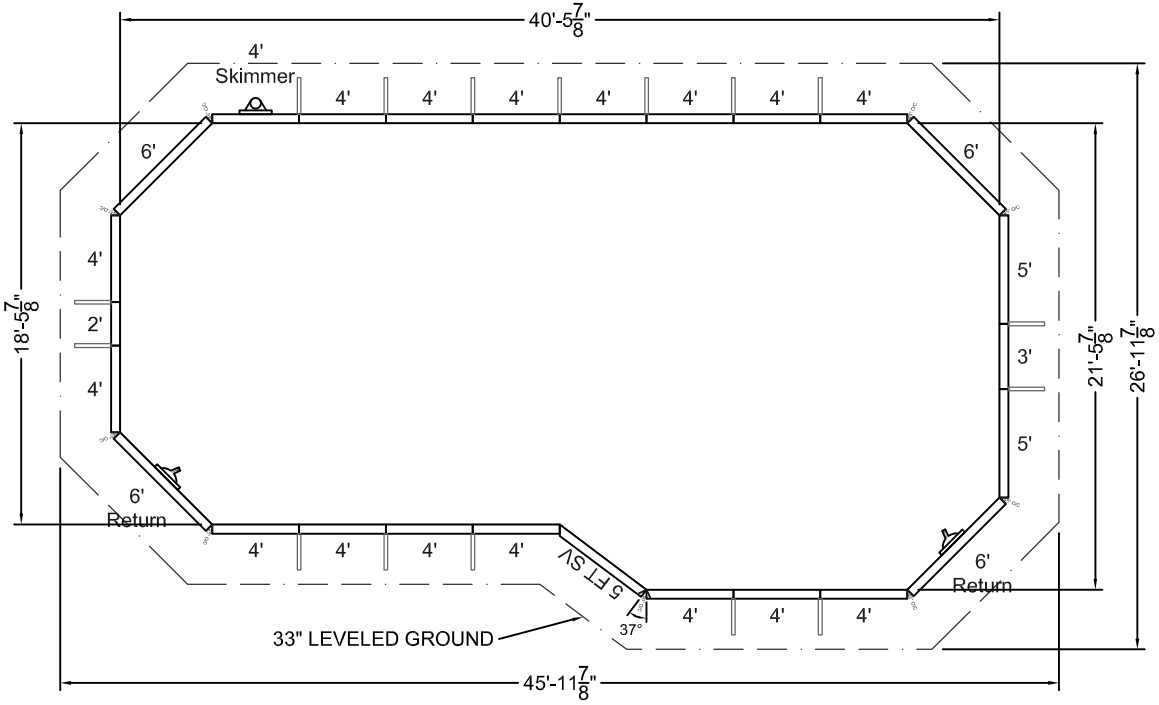

DESCRIPTION	QTY
2' STR	1
3' STR	1
4' STR	16
4' STR SKM	1
5' STR	2
6' STR	2
6' STR RTN	2
5 FT SV	1
45° O/C	8
37° O/C	1
BUTTRESS SUPPORTS	16
STD HARDWARE PACK	1

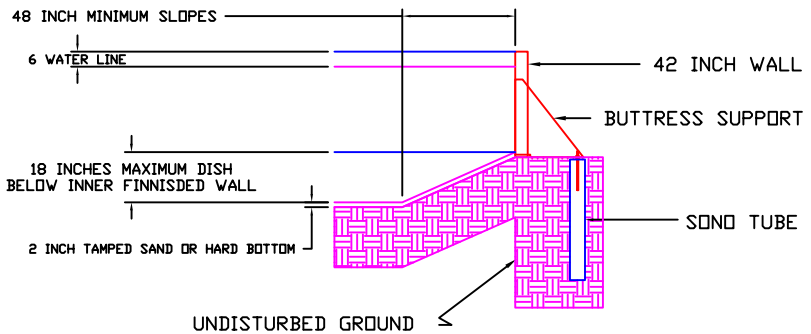

ONGROUND BARTOP POOLS

KIT REF# MNB2240LMO-42

MEGNA POOLS

Megna Plastic Packaging Corp.

SIZE:	SHAPE:	HAND:	DWG#	
21'-6" x 40'-6"	MONARCH	LEFT	22X40X19	B

PER.:	112'	S.A.:	767.11 ft²	VOL.:	0.00 gal.us	DATE: 16/12/2010	APPROVED:
PER.:	34.14 m	S.A.:	71.27 m²	VOL.:	0.00 liters	DRAWN BY: BCC	

STAKE OUT

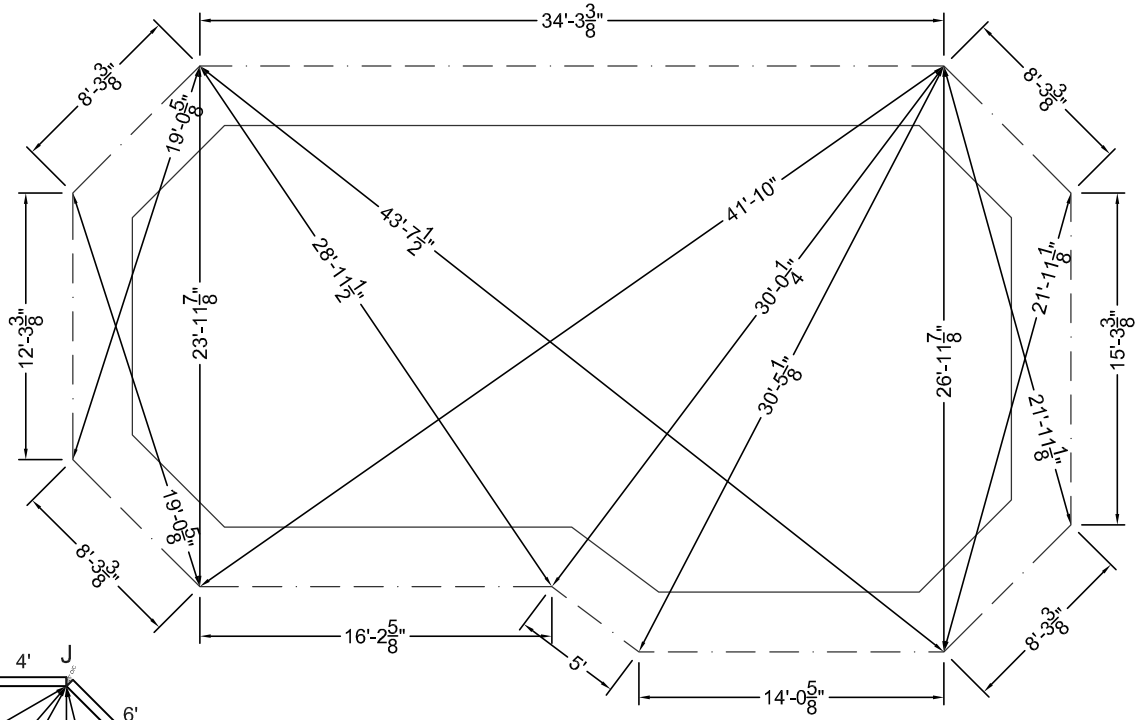

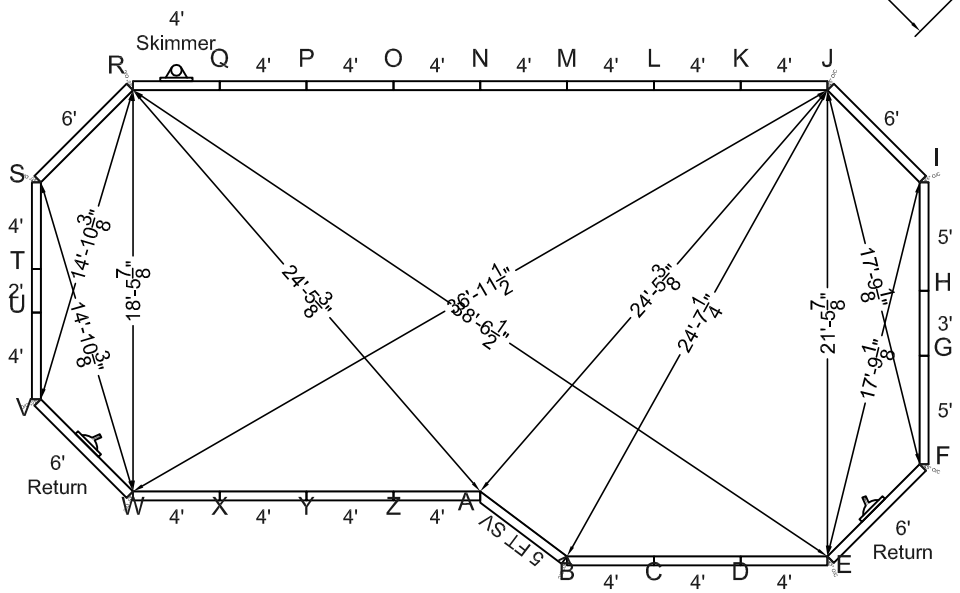

STEEL CHECK

KIT REF# MNB2240LMO-42

MEGNA POOLS

Megna Plastic Packaging Corp.

SIZE:	SHAPE:	HAND:	DWG#	
21'-6" x 40'-6"	MONARCH	RIGHT	22X40X19	A

PER.:	112'	S.A.:	767.11 ft²	VOL.:	0.00 gal.us	DATE: 16/12/2010
PER.:	34.14 m	S.A.:	71.27 m²	VOL.:	0.00 liters	DRAWN BY: BCC

APPROVED:

ALL DIMENSIONS ARE FINISHED

MANUFACTURING NOTICE

1- DUE TO UNCERTAIN GROUND VARIANCES POOL WALLS MUST BE INSTALLED A MINIMUM OF 6 INCHES BELOW GRADE
2- BUTTRESS SUPPORTS MUST BE FULLY SUPPORTED INCLUDING SONO TUBES BELOW FROST LEVEL. (4 FEET)
3- 12 INCH CONCRETE COLLAR MINIMUM 24 INCHES PAST STRAIGHT SIDES.
4- FILL REMOVED, TO BE SLOPED AROUND OUTSIDE PERIMETER.

NONCOMPLIANCE VOIDS WARRANTY

5- ALL BARTOP PANELS AVAILABLE IN 42" TO 48" PANEL HEIGHTS.

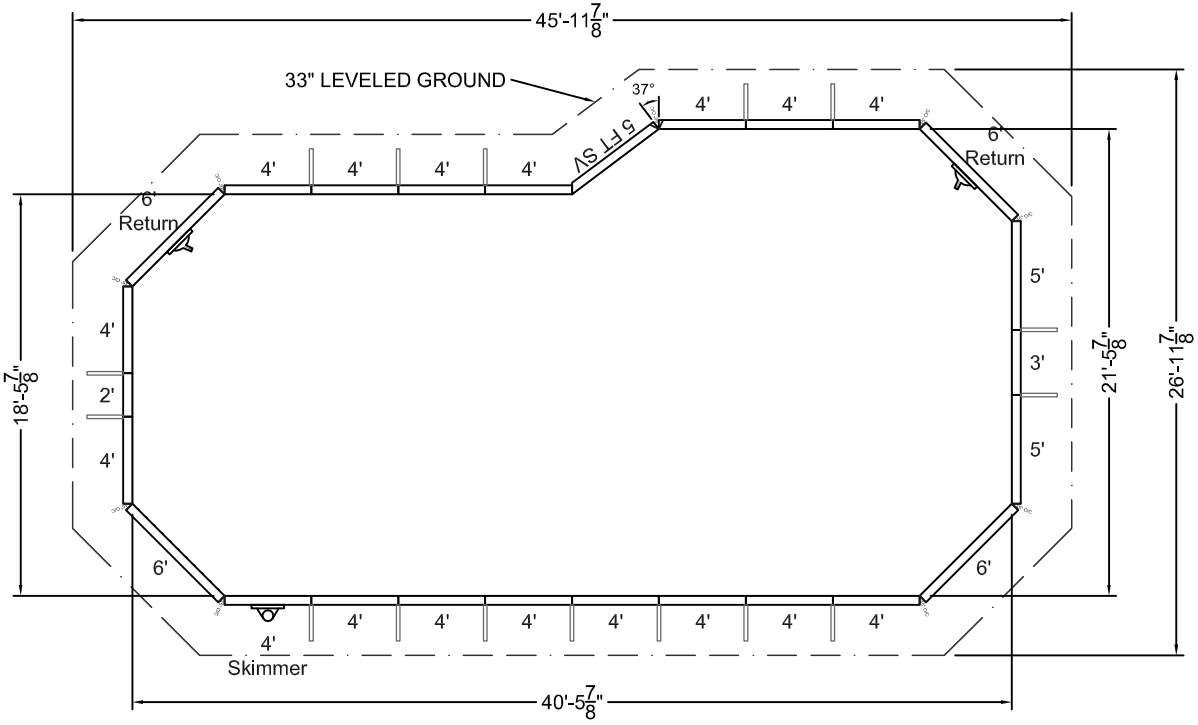

DESCRIPTION	QTY
2' STR	1
3' STR	1
4' STR	16
4' STR SKM	1
5' STR	2
6' STR	2
6' STR RTN	2
5 FT SV	1
45° O/C	8
37° O/C	1
BUTTRESS SUPPORTS	16
STD HARDWARE PACK	1

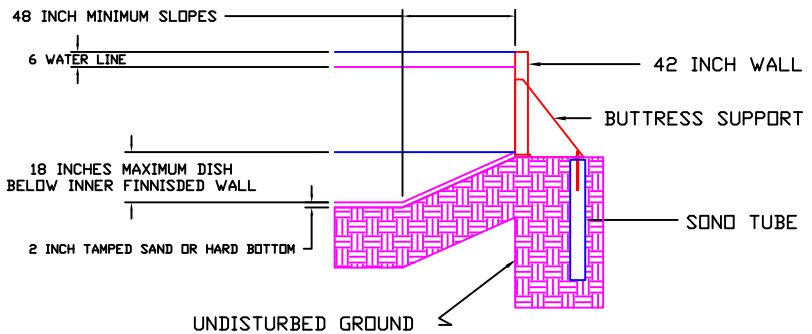

ONGROUND BARTOP POOLS

KIT REF# MNB2240RMO-42

MEGNA POOLS

Megna Plastic Packaging Corp.

SIZE:		SHAPE:			HAND:	DWG#	
21'-6" x 40'-6"		MONARCH			RIGHT	22X40X19	B
PER.:	112'	S.A.:	767.11 ft²	VOL.: 0.00 gal.us	DATE: 16/12/2010	APPROVED:	
PER.:	34.14 m	S.A.:	71.27 m²	VOL.: 0.00 liters	DRAWN BY: BCC		

STAKE OUT

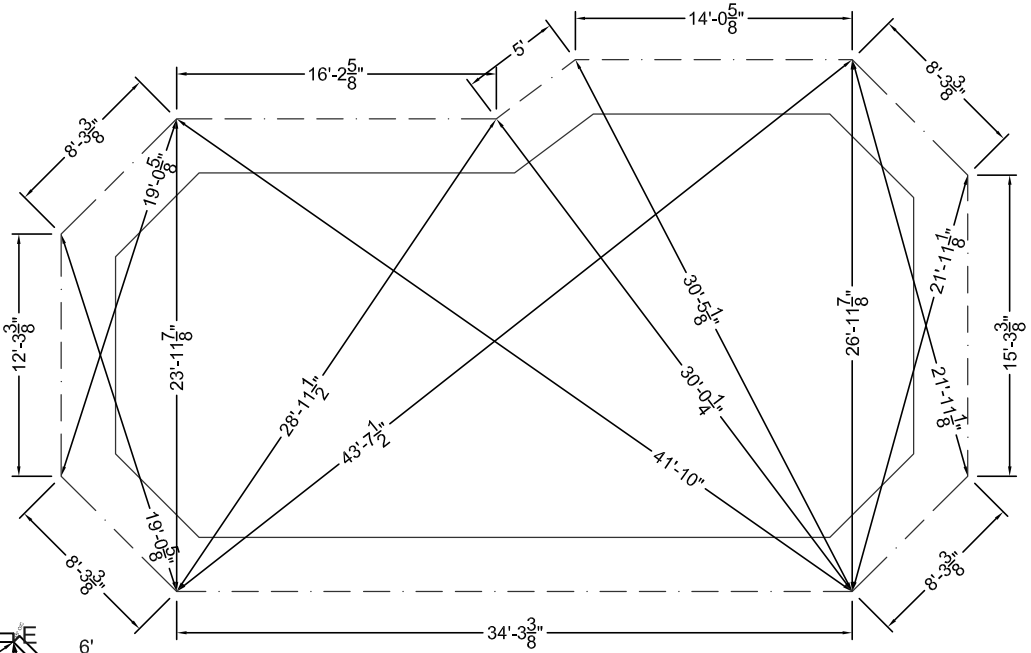

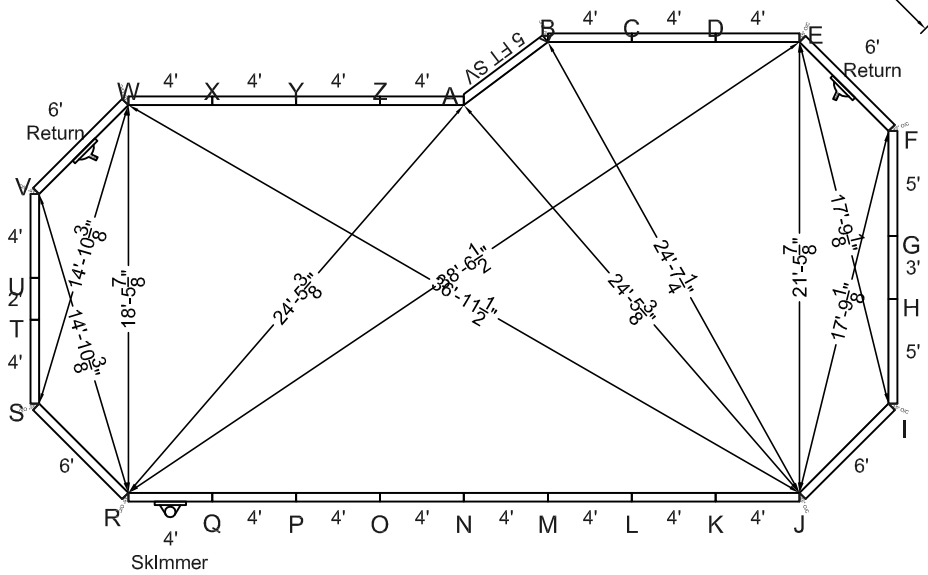

STEEL CHECK

KIT REF# MNB2240RMO-42

MEGNA POOLS
Megna Plastic Packaging Corp.

SIZE:	SHAPE:	HAND:	DWG#
14'-6" x 14'-6"	OCTAGON	N/A	16FT A

PER.:	48'	S.A.:	173.82 ft²	VOL.:	0.00 gal.us
PER.:	14.63 m	S.A.:	16.15 m²	VOL.:	0.00 liters

DATE: 14/01/2011
DRAWN BY: BCC
APPROVED:

ALL DIMENSIONS ARE FINISHED

MANUFACTURING NOTICE

1- DUE TO UNCERTAIN GROUND VARIANCES POOL WALLS MUST BE INSTALLED A MINIMUM OF 6 INCHES BELOW GRADE
2- BUTTRESS SUPPORTS MUST BE FULLY SUPPORTED INCLUDING SONO TUBES BELOW FROST LEVEL. (4 FEET)
3- 12 INCH CONCRETE COLLAR MINIMUM 24 INCHES PAST STRAIGHT SIDES.
4- FILL REMOVED, TO BE SLOPED AROUND OUTSIDE PERIMETER.

NONCOMPLIANCE VOIDS WARRANTY

5- ALL BARTOP PANELS AVAILABLE IN 42" TO 48" PANEL HEIGHTS.

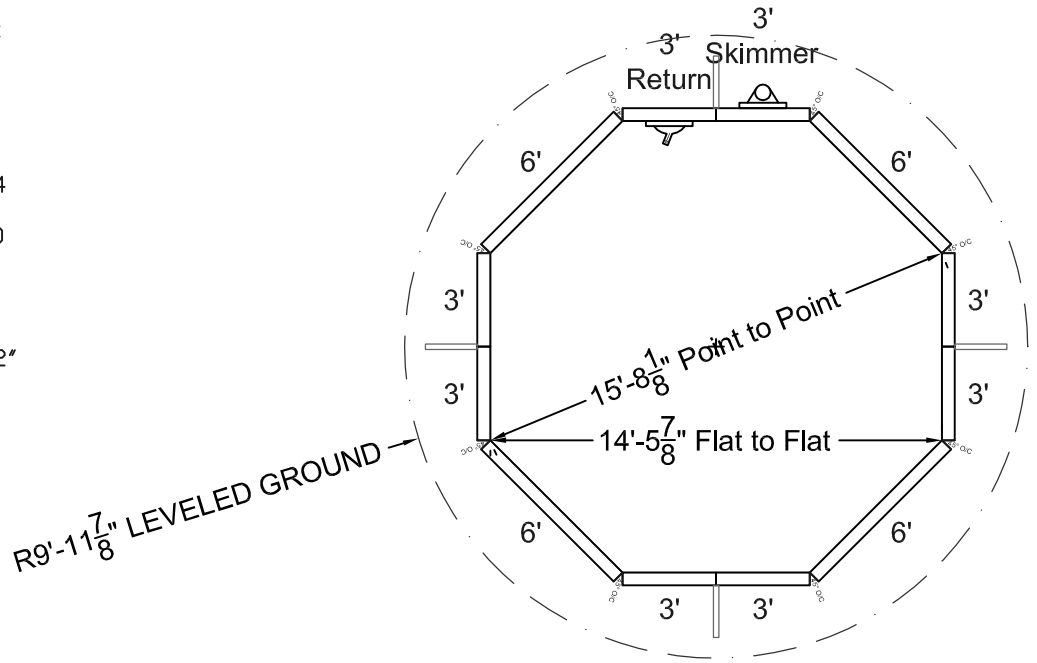

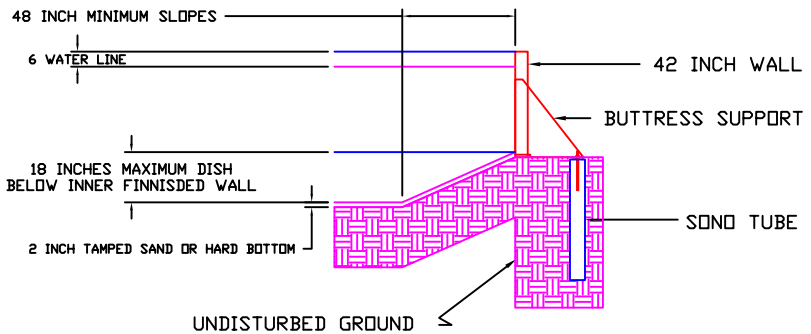

DESCRIPTION	QTY
3' STR	6
3' STR RTN	1
3' STR SKM	1
6' STR	4
45° O/C	8
BUTTRESS SUPPORTS	4
STD HARDWARE PACK	1

ONGROUND BARTOP POOLS

KIT REF# MNB1515-OC-42

MEGNA POOLS

Megna Plastic Packaging Corp.

SIZE:	SHAPE:	HAND:	DWG#
14'-6" x 14'-6"	OCTAGON	N/A	16FT B

PER.:	48'	S.A.:	173.82 ft²	VOL.:	0.00 gal.us	DATE: 14/01/2011	APPROVED:
PER.:	14.63 m	S.A.:	16.15 m²	VOL.:	0.00 liters	DRAWN BY: BCC	

STAKE OUT

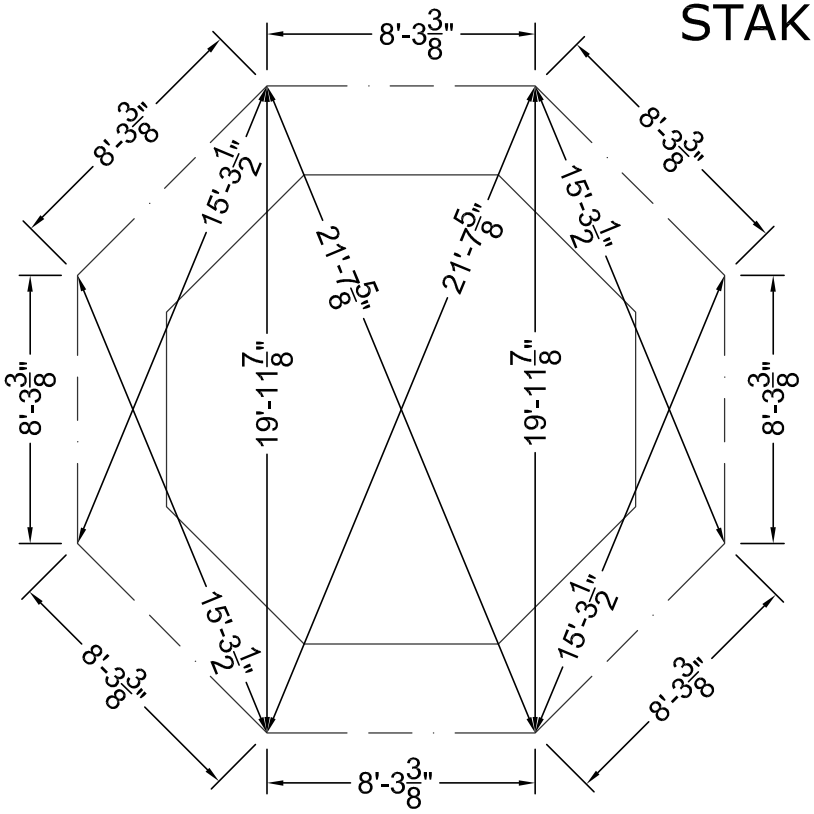

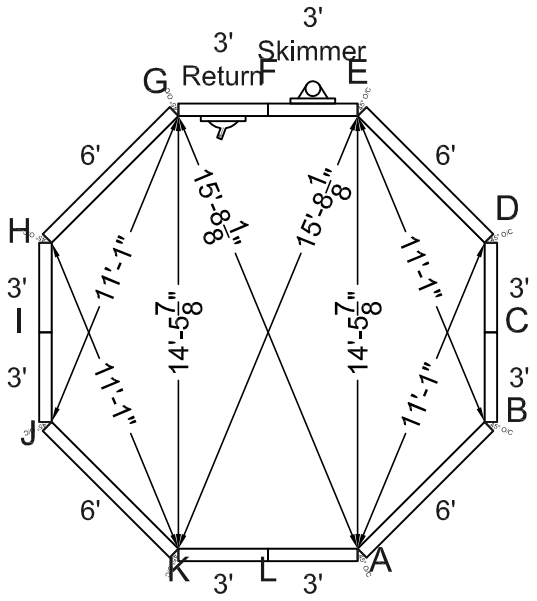

STEEL CHECK

KIT REF# MNB1515-OC-42

MEGNA POOLS
Megna Plastic Packaging Corp.

SIZE:	SHAPE:	HAND:	DWG#
16'-11" x 16'-11"	OCTAGON	N/A	18FT A

PER.:	56'	S.A.:	236.59 ft²	VOL.:	0.00 gal.us
PER.:	17.07 m	S.A.:	21.98 m²	VOL.:	0.00 liters

DATE: 22/01/2010 | APPROVED:
DRAWN BY: BCC

ALL DIMENSIONS ARE FINISHED

MANUFACTURING NOTICE

1- DUE TO UNCERTAIN GROUND VARIANCES POOL WALLS MUST BE INSTALLED A MINIMUM OF 6 INCHES BELOW GRADE
2- BUTTRESS SUPPORTS MUST BE FULLY SUPPORTED INCLUDING SONO TUBES BELOW FROST LEVEL. (4 FEET)
3- 12 INCH CONCRETE COLLAR MINIMUM 24 INCHES PAST STRAIGHT SIDES.
4- FILL REMOVED, TO BE SLOPED AROUND OUTSIDE PERIMETER.

NONCOMPLIANCE VOIDS WARRANTY

5- ALL BARTOP PANELS AVAILABLE IN 42" TO 48" PANEL HEIGHTS.

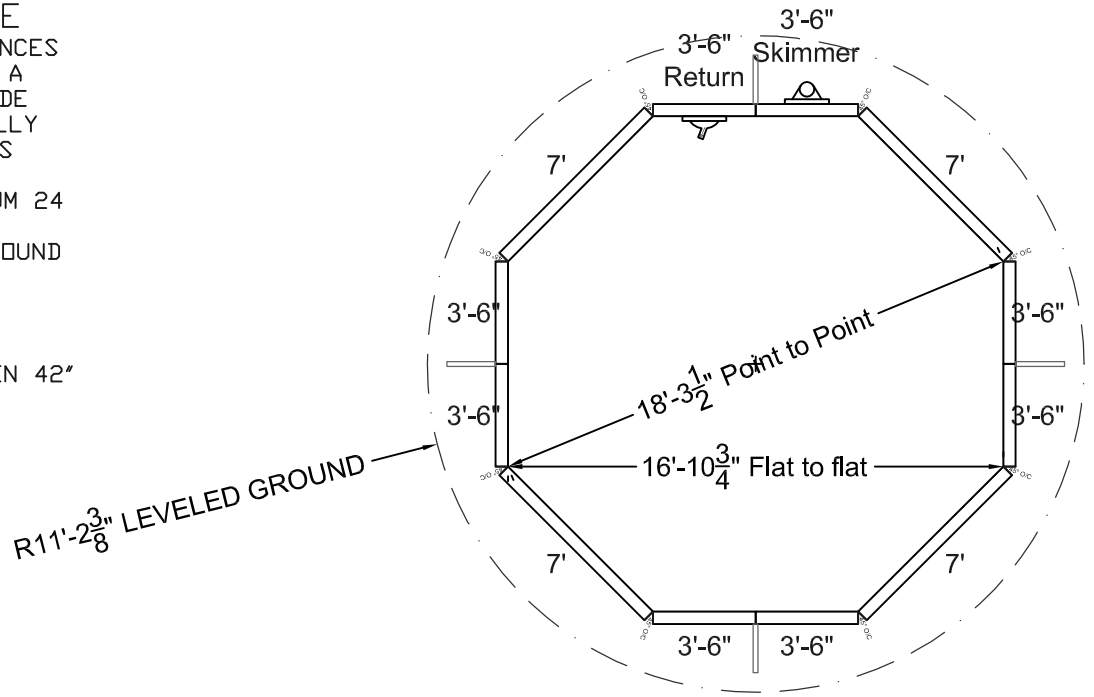

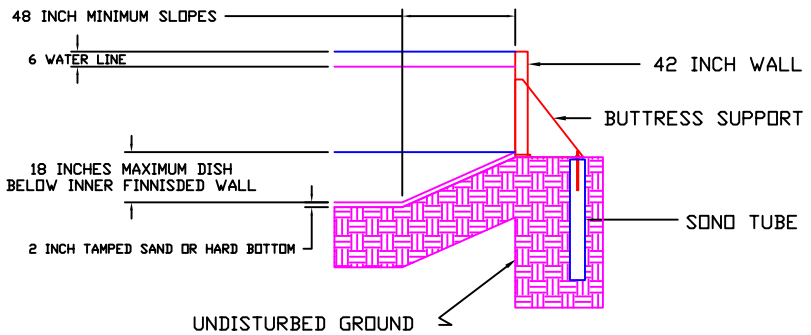

DESCRIPTION	QTY
3'-6" STR	6
3'-6" STR RTN	1
3'-6" STR SKM	1
7' STR	4
45° O/C	8
BUTTRESS SUPPORTS	4
STD HARDWARE PACK	1

ONGROUND BARTOP POOLS

KIT REF# MNB1818-OC-42

MEGNA POOLS

Megna Plastic Packaging Corp.

SIZE: 16'-11" x 16'-11"		SHAPE: OCTAGON			HAND: N/A	DWG# 18FT B	
PER.:	56'	S.A.:	236.59 ft²	VOL.: 0.00 gal.us	DATE: 22/01/2010	APPROVED:	
PER.:	17.07 m	S.A.:	21.98 m²	VOL.: 0.00 liters	DRAWN BY: BCC		

STAKE OUT

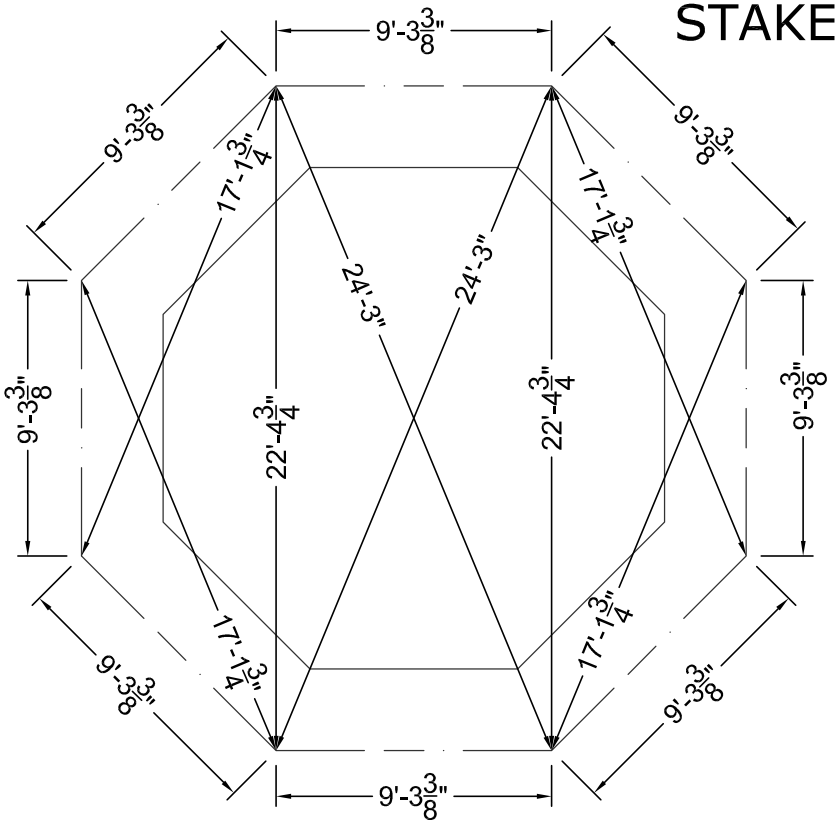

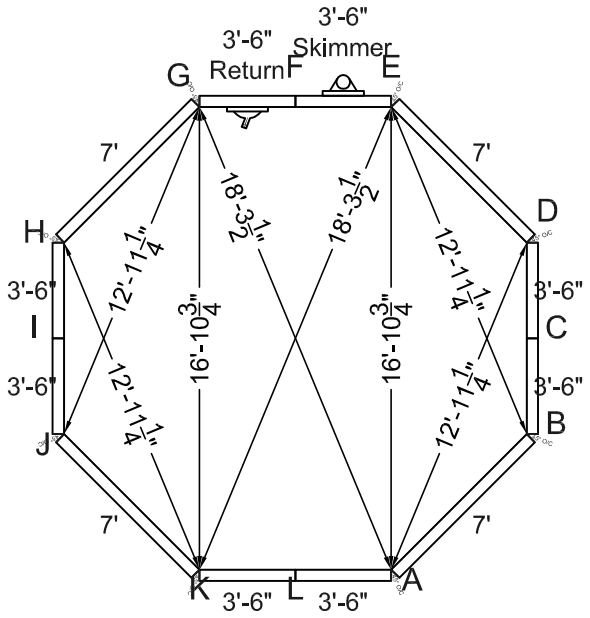

STEEL CHECK

KIT REF# MNB1818-OC-42

MEGNA POOLS
Megna Plastic Packaging Corp.

SIZE: 19'-4" x 19'-4"	SHAPE: OCTAGON		HAND: N/A	DWG# 21 FT A
PER.: 64'	S.A.: 309.02 ft²	VOL.: 0.00 gal.us	DATE: 22/01/2010	APPROVED:
PER.: 19.51 m	S.A.: 28.71 m²	VOL.: 0.00 liters	DRAWN BY: BCC	

ALL DIMENSIONS ARE FINISHED

MANUFACTURING NOTICE

1- DUE TO UNCERTAIN GROUND VARIANCES POOL WALLS MUST BE INSTALLED A MINIMUM OF 6 INCHES BELOW GRADE
2- BUTTRESS SUPPORTS MUST BE FULLY SUPPORTED INCLUDING SONO TUBES BELOW FROST LEVEL. (4 FEET)
3- 12 INCH CONCRETE COLLAR MINIMUM 24 INCHES PAST STRAIGHT SIDES.
4- FILL REMOVED, TO BE SLOPED AROUND OUTSIDE PERIMETER.

NONCOMPLIANCE VOIDS WARRANTY

5- ALL BARTOP PANELS AVAILABLE IN 42" TO 48" PANEL HEIGHTS.

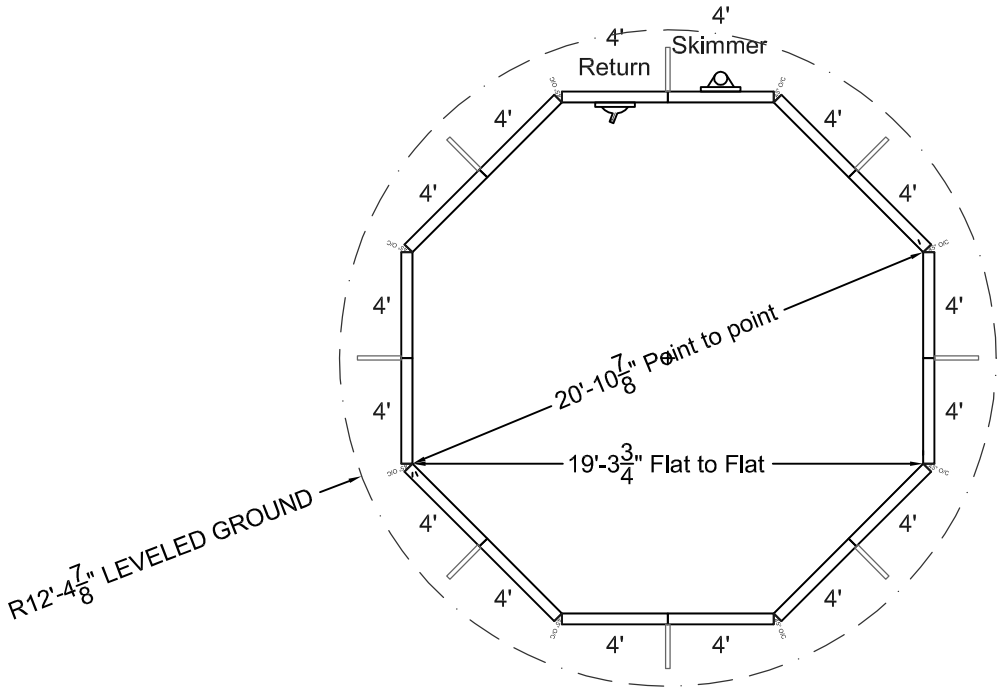

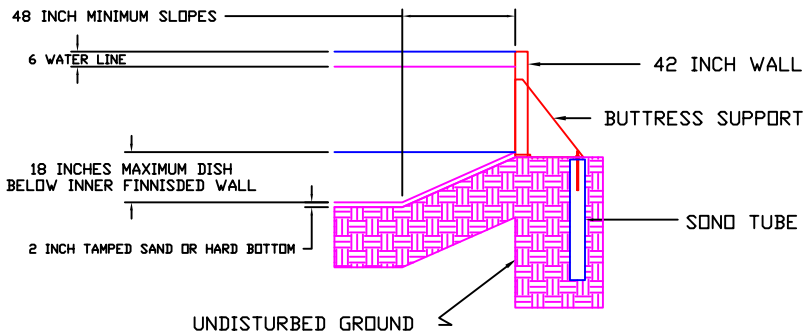

DESCRIPTION	QTY
4' STR	14
4' STR RTN	1
4' STR SKM	1
45° O/C	8
BUTTRESS SUPPORTS	8
STD HARDWARE PACK	1

ONGROUND BARTOP POOLS

KIT REF# MNB2121-OC-42

MEGNA POOLS

Megna Plastic Packaging Corp.

SIZE: 19'-4" x 19'-4"	SHAPE: OCTAGON			HAND: N/A	DWG# 21 FT B	
PER.: 64'	S.A.: 309.02 ft²	VOL.: 0.00 gal.us	DATE: 22/01/2010	APPROVED:
PER.: 19.51 m	S.A.: 28.71 m²	VOL.: 0.00 liters	DRAWN BY: BCC	

STAKE OUT

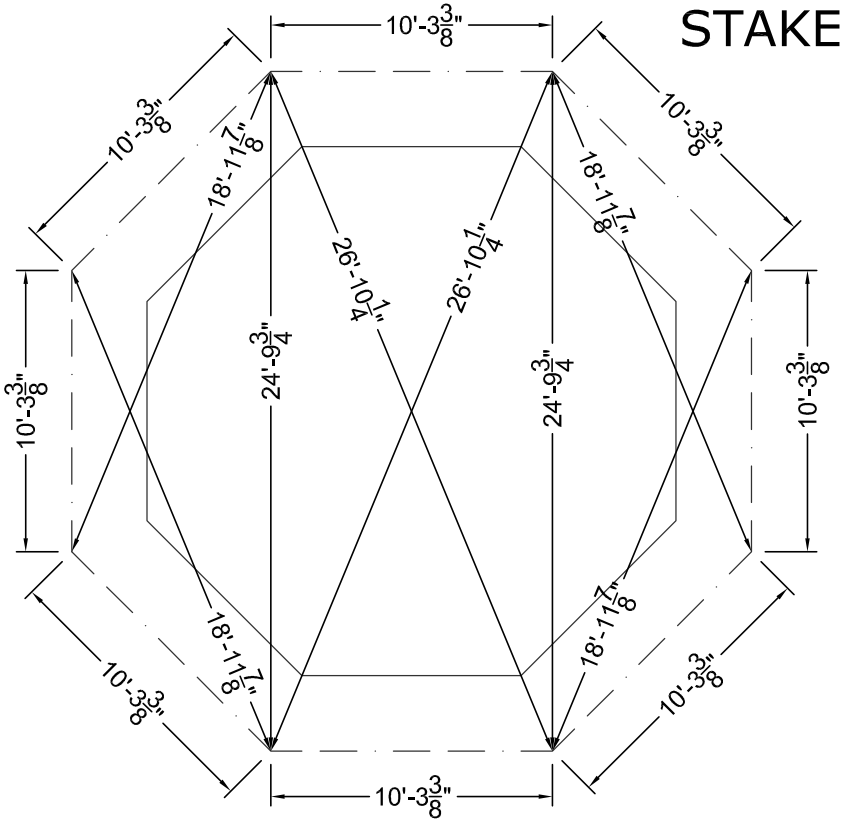

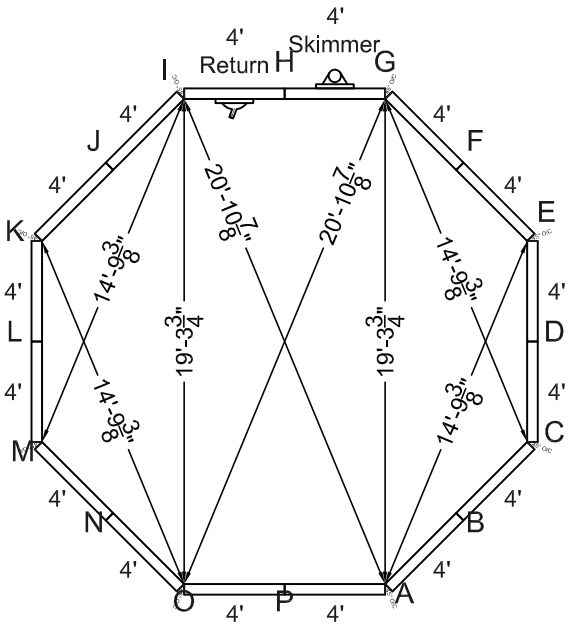

STEEL CHECK

KIT REF# MNB2121-OC-42

MEGNA POOLS

Megna Plastic Packaging Corp.

SIZE:	SHAPE:	HAND:	DWG#
24'-2" x 24'-2"	OCTAGON	N/A	26 FT A

PER.:	80'	S.A.:	482.84 ft²	VOL.:	0.00 gal.us
PER.:	24.38 m	S.A.:	44.86 m²	VOL.:	0.00 liters

DATE: 03/03/2010

DRAWN BY: BCC

APPROVED:

ALL DIMENSIONS ARE FINISHED

MANUFACTURING NOTICE

1- DUE TO UNCERTAIN GROUND VARIANCES POOL WALLS MUST BE INSTALLED A MINIMUM OF 6 INCHES BELOW GRADE

2- BUTTRESS SUPPORTS MUST BE FULLY SUPPORTED INCLUDING SONO TUBES BELOW FROST LEVEL. (4 FEET)

3- 12 INCH CONCRETE COLLAR MINIMUM 24 INCHES PAST STRAIGHT SIDES.

4- FILL REMOVED, TO BE SLOPED AROUND OUTSIDE PERIMETER.

NONCOMPLIANCE VOIDS WARRANTY

5- ALL BARTOP PANELS AVAILABLE IN 42" TO 48" PANEL HEIGHTS.

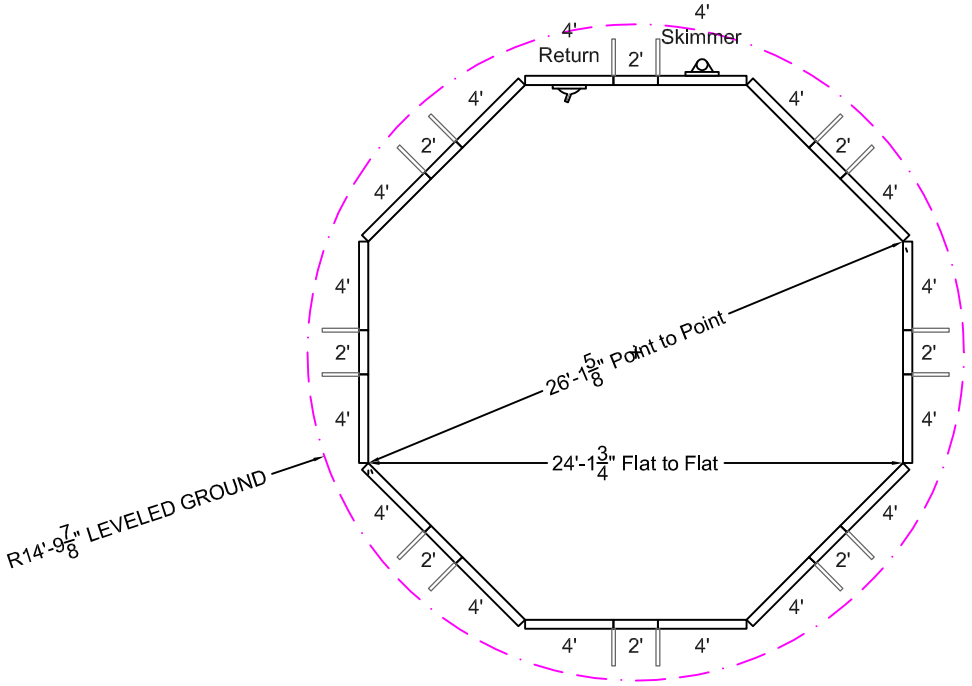

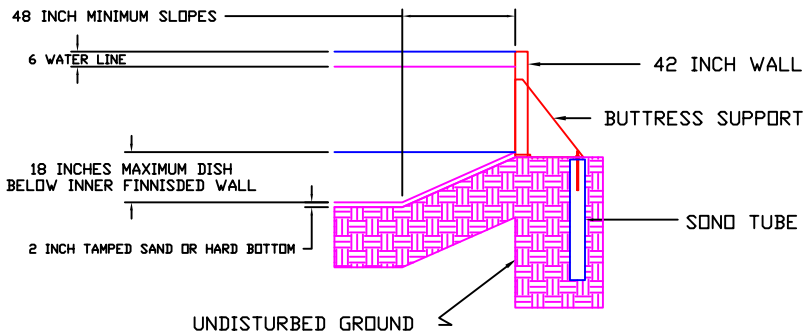

DESCRIPTION	QTY
2' STR	8
4' STR	14
4' STR RTN	1
4' STR SKM	1
BUTTRESS SUPPORTS	16
STD HARDWARE PACK	1

ONGROUND BARTOP POOLS

KIT REF# MNB2424-OC-42

MEGNA POOLS

Megna Plastic Packaging Corp.

SIZE:	SHAPE:	HAND:	DWG#
24'-2" x 24'-2"	OCTAGON	N/A	26 FT B

PER.:	80'	S.A.:	482.84 ft²	VOL.:	0.00 gal.us	DATE: 03/03/2010
PER.:	24.38 m	S.A.:	44.86 m²	VOL.:	0.00 liters	DRAWN BY: BCC

APPROVED:

STAKE OUT

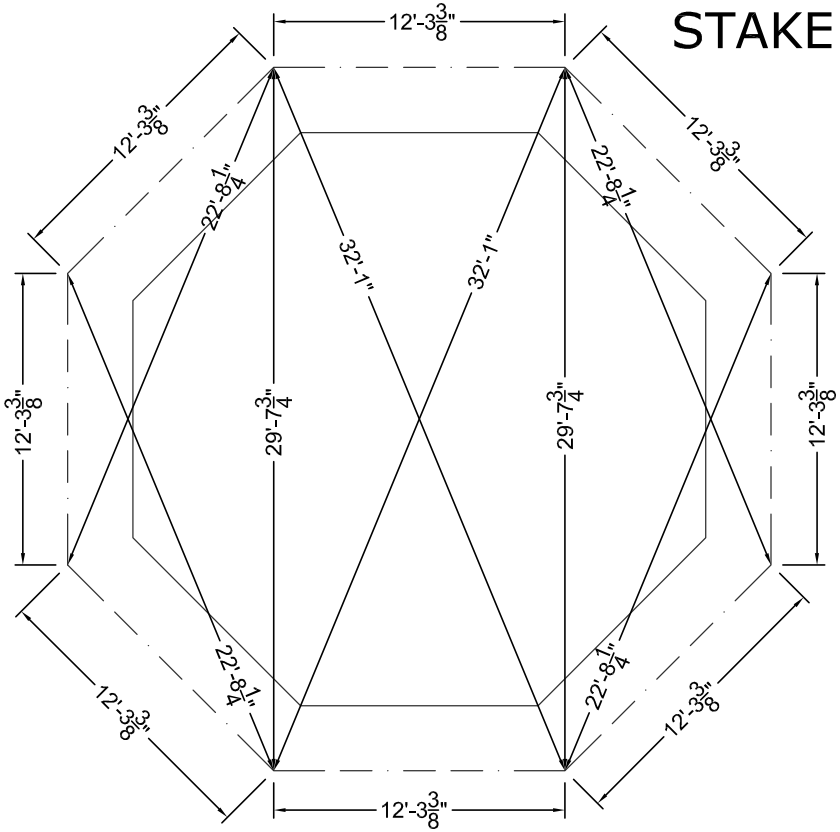

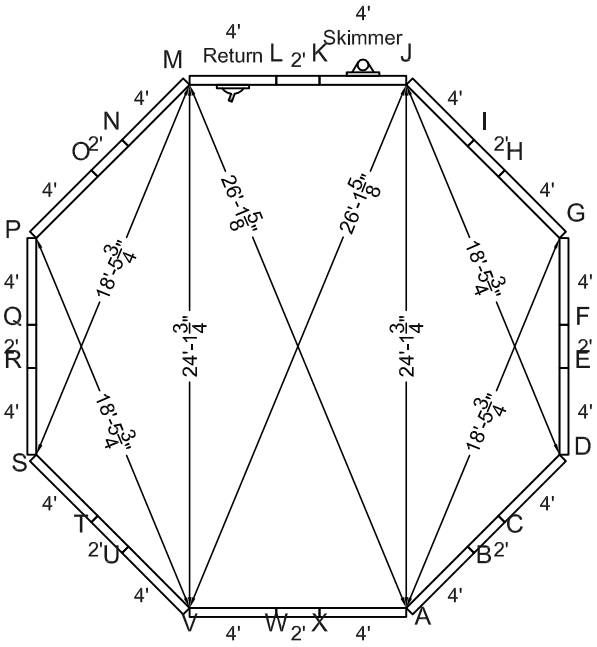

STEEL CHECK

KIT REF# MNB2424-OC-42

MEGNA POOLS
Megna Plastic Packaging Corp.

SIZE:	SHAPE:	HAND:	DWG#
10' x 17'-10"	OVAL	N/A	10X18 A

PER.:	47'	S.A.:	156.44 ft²	VOL.:	0.00 gal.us
PER.:	14.33 m	S.A.:	14.53 m²	VOL.:	0.00 liters

DATE: 20/01/2010 | APPROVED:
DRAWN BY: BCC

ALL DIMENSIONS ARE FINISHED

MANUFACTURING NOTICE

1- DUE TO UNCERTAIN GROUND VARIANCES POOL WALLS MUST BE INSTALLED A MINIMUM OF 6 INCHES BELOW GRADE
2- BUTTRESS SUPPORTS MUST BE FULLY SUPPORTED INCLUDING SONO TUBES BELOW FROST LEVEL. (4 FEET)
3- 12 INCH CONCRETE COLLAR MINIMUM 24 INCHES PAST STRAIGHT SIDES.
4- FILL REMOVED, TO BE SLOPED AROUND OUTSIDE PERIMETER.

NONCOMPLIANCE VOIDS WARRANTY

5- ALL BARTOP PANELS AVAILABLE IN 42" TO 48" PANEL HEIGHTS.

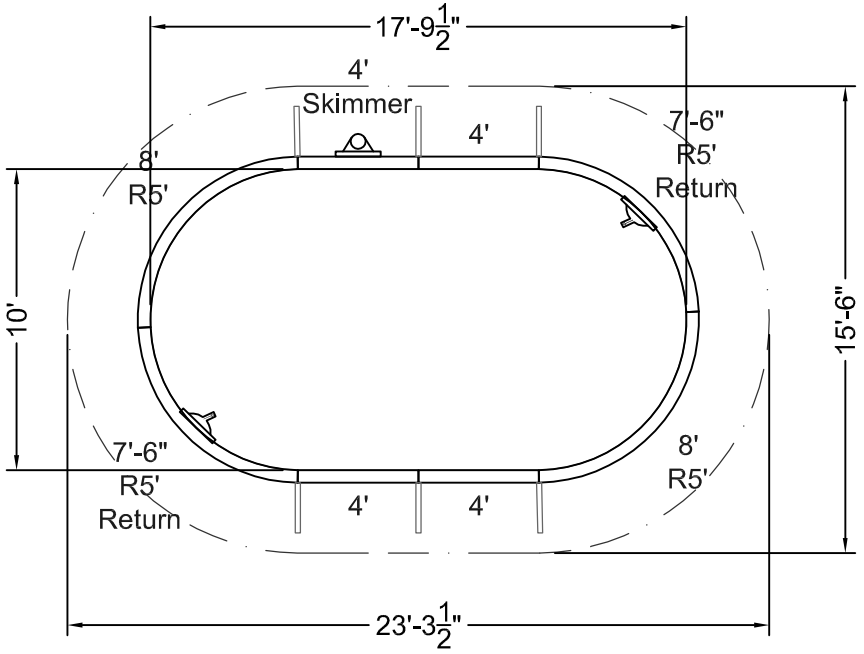

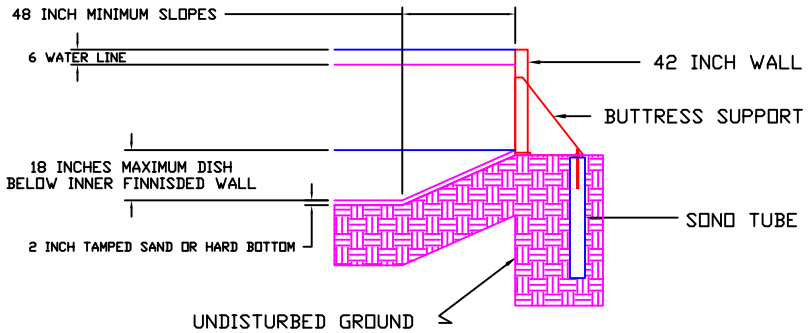

DESCRIPTION	QTY
4' STR	3
4' STR SKM	1
7'-6"x5' RAD RTN	2
8'x5' RAD	2
BUTTRESS SUPPORTS	6
STD HARDWARE PACK	1

ONGROUND BARTOP POOLS

KIT REF# MNB1018-OV-42

MEGNA POOLS
Megna Plastic Packaging Corp.

SIZE: 10' x 17'-10"		SHAPE: OVAL				HAND: N/A	DWG# 10X18 B
PER.:	47'	S.A.:	156.44 ft²	VOL.:	0.00 gal.us	DATE: 20/01/2010	APPROVED:
PER.:	14.33 m	S.A.:	14.53 m²	VOL.:	0.00 liters	DRAWN BY: BCC	

STAKE OUT

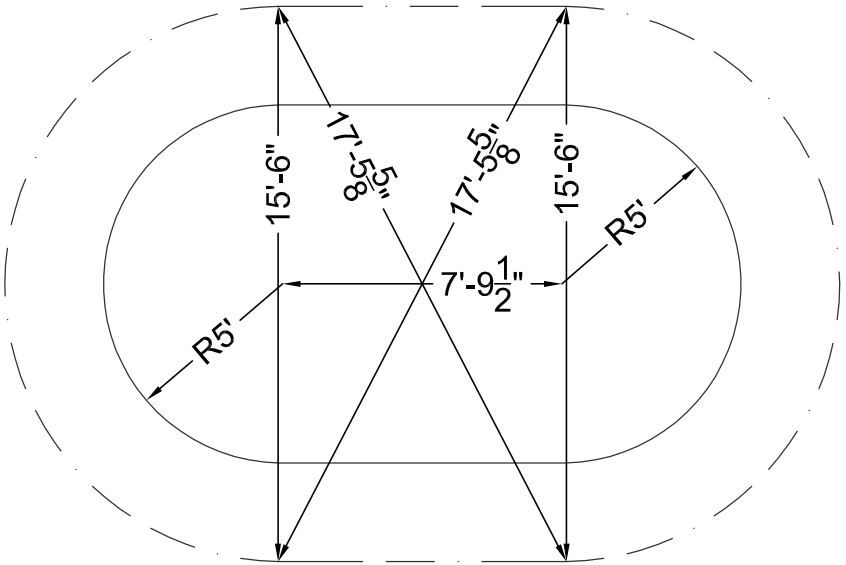

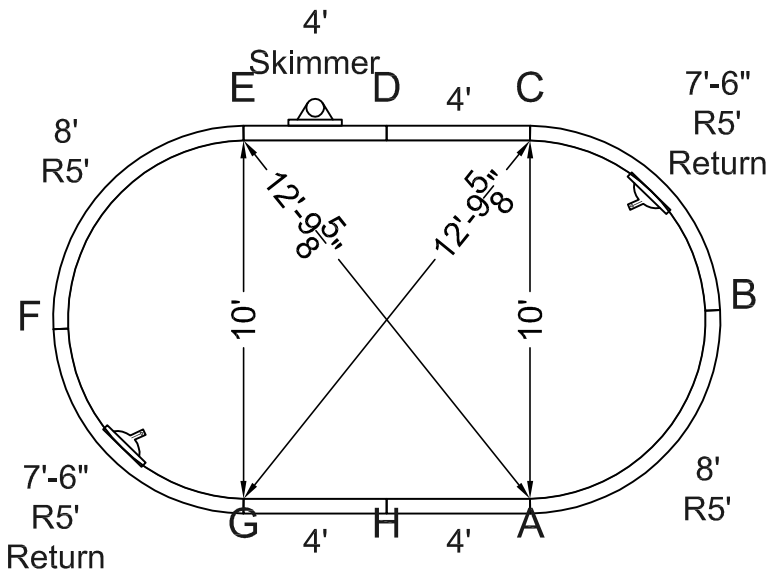

STEEL CHECK

KIT REF# MNB1018-OV-42

MEGNA POOLS

Megna Plastic Packaging Corp.

SIZE:	SHAPE:	HAND:	DWG#	
12' x 18'-2"	OVAL	N/A	12X18	A

PER.:	50'	S.A.:	186.90 ft²	VOL.:	0.00 gal.us	DATE: 21/01/2010
PER.:	15.24 m	S.A.:	17.36 m²	VOL.:	0.00 liters	DRAWN BY: BCC

APPROVED:

ALL DIMENSIONS ARE FINISHED

MANUFACTURING NOTICE

1- DUE TO UNCERTAIN GROUND VARIANCES POOL WALLS MUST BE INSTALLED A MINIMUM OF 6 INCHES BELOW GRADE
2- BUTTRESS SUPPORTS MUST BE FULLY SUPPORTED INCLUDING SONO TUBES BELOW FROST LEVEL. (4 FEET)
3- 12 INCH CONCRETE COLLAR MINIMUM 24 INCHES PAST STRAIGHT SIDES.
4- FILL REMOVED, TO BE SLOPED AROUND OUTSIDE PERIMETER.

NONCOMPLIANCE VOIDS WARRANTY

5- ALL BARTOP PANELS AVAILABLE IN 42" TO 48" PANEL HEIGHTS.

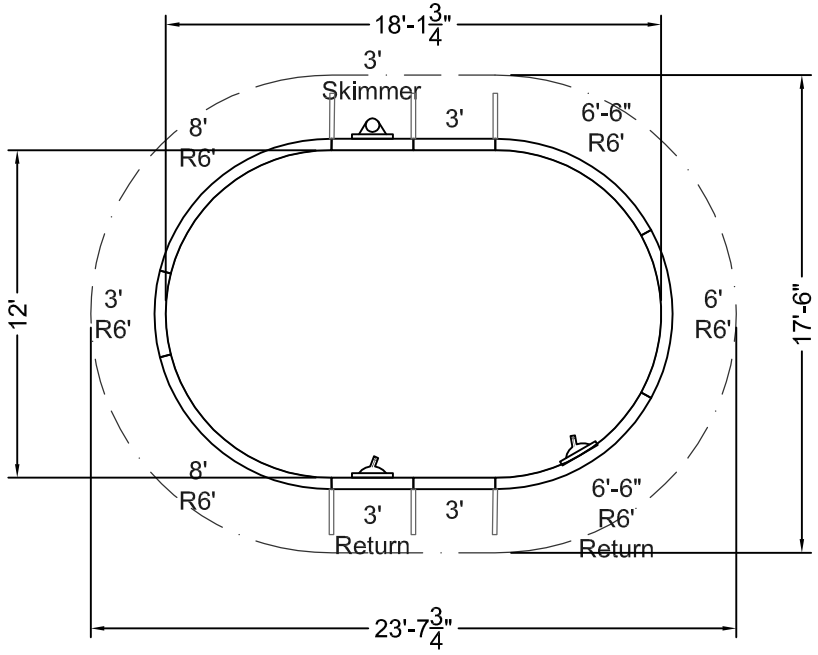

DESCRIPTION	QTY
3' STR	2
3' STR RTN	1
3' STR SKM	1
3'x6' RAD	1
6'x6' RAD	1
6'-6"x6' RAD	1
6'-6"x6' RAD RTN	1
8'x6' RAD	2
BUTTRESS SUPPORTS	6
STD HARDWARE PACK	1

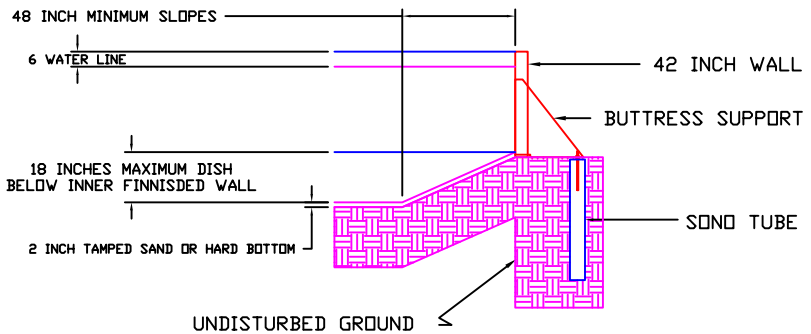

ONGROUND BARTOP POOLS

KIT REF# MNB1218-OV-42

MEGNA POOLS
Megna Plastic Packaging Corp.

SIZE: 12' x 18'-2"	SHAPE: OVAL		HAND: N/A	DWG# 12X18 B
PER.: 50'	S.A.: 186.90 ft²	VOL.: 0.00 gal.us	DATE: 21/01/2010	APPROVED:
PER.: 15.24 m	S.A.: 17.36 m²	VOL.: 0.00 liters	DRAWN BY: BCC	

STAKE OUT

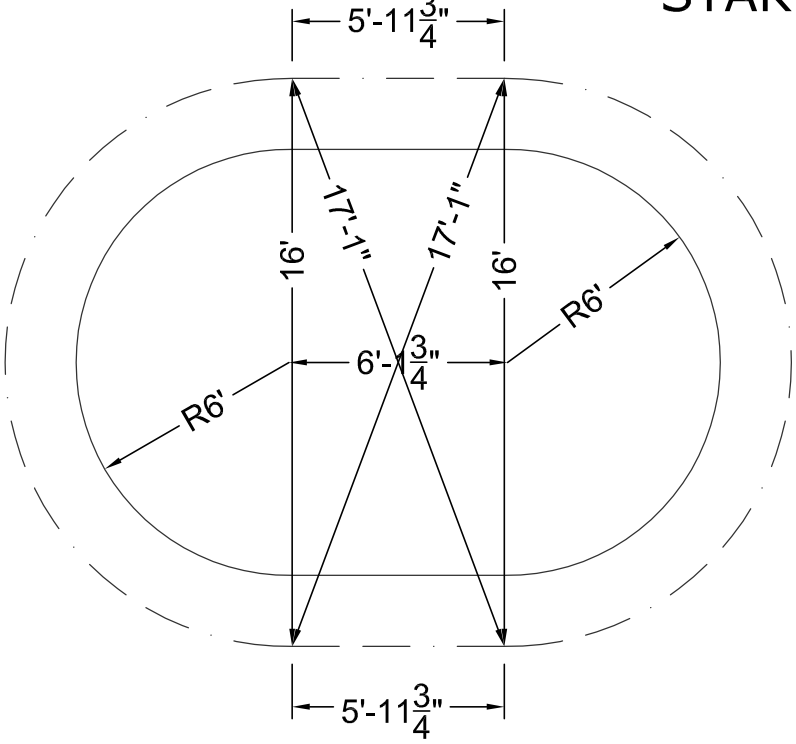

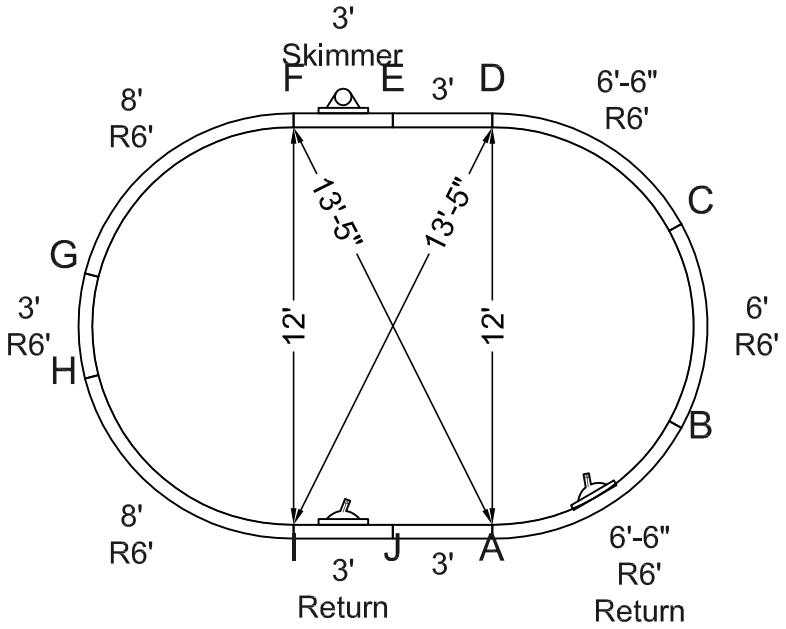

STEEL CHECK

KIT REF# MNB1218-OV-42

MEGNA POOLS
Megna Plastic Packaging Corp.

SIZE:	SHAPE:	HAND:	DWG#	
12' x 24'-2"	OVAL	N/A	12X24	A

PER.:	62'	S.A.:	258.89 ft²	VOL.:	0.00 gal.us	DATE: 21/01/2010	APPROVED:
PER.:	18.90 m	S.A.:	24.05 m²	VOL.:	0.00 liters	DRAWN BY: BCC	

ALL DIMENSIONS ARE FINISHED

MANUFACTURING NOTICE

1- DUE TO UNCERTAIN GROUND VARIANCES POOL WALLS MUST BE INSTALLED A MINIMUM OF 6 INCHES BELOW GRADE
2- BUTTRESS SUPPORTS MUST BE FULLY SUPPORTED INCLUDING SONO TUBES BELOW FROST LEVEL. (4 FEET)
3- 12 INCH CONCRETE COLLAR MINIMUM 24 INCHES PAST STRAIGHT SIDES.
4- FILL REMOVED, TO BE SLOPED AROUND OUTSIDE PERIMETER.

NONCOMPLIANCE VOIDS WARRANTY

5- ALL BARTOP PANELS AVAILABLE IN 42" TO 48" PANEL HEIGHTS.

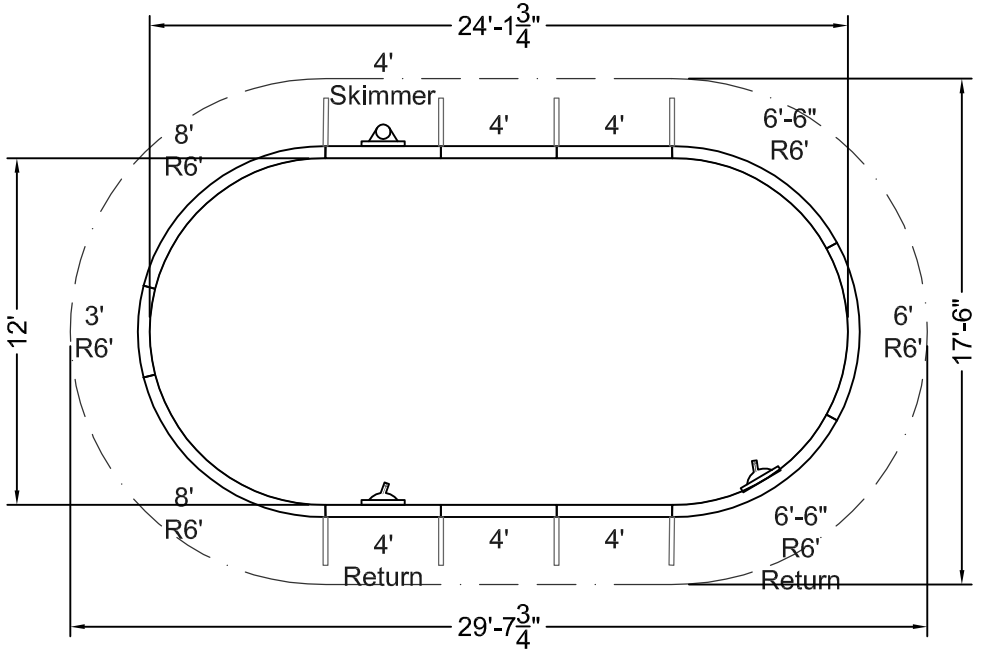

DESCRIPTION	QTY
4' STR	4
4' STR RTN	1
4' STR SKM	1
3'x6' RAD	1
6'x6' RAD	1
6'-6"x6' RAD	1
6'-6"x6' RAD RTN	1
8'x6' RAD	2
BUTTRESS SUPPORTS	8
STD HARDWARE PACK	1

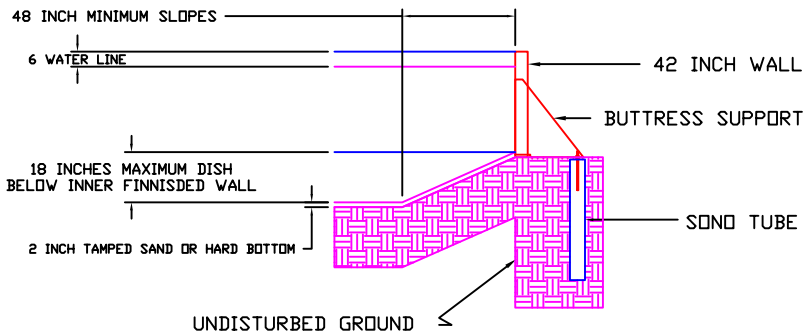

ONGROUND BARTOP POOLS

KIT REF# MNB1224-OV-42

MEGNA POOLS
Megna Plastic Packaging Corp.

SIZE: 12' x 24'-2"		SHAPE: OVAL				HAND: N/A	DWG# 12X24 B
PER.:	62'	S.A.:	258.89 ft²	VOL.:	0.00 gal.us	DATE: 21/01/2010	APPROVED:
PER.:	18.90 m	S.A.:	24.05 m²	VOL.:	0.00 liters	DRAWN BY: BCC	

STAKE OUT

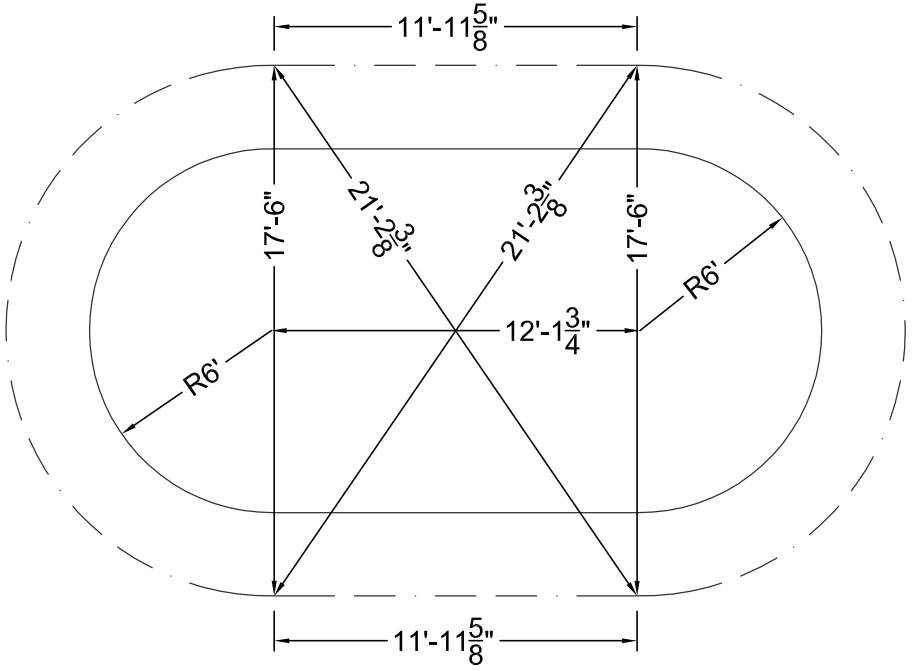

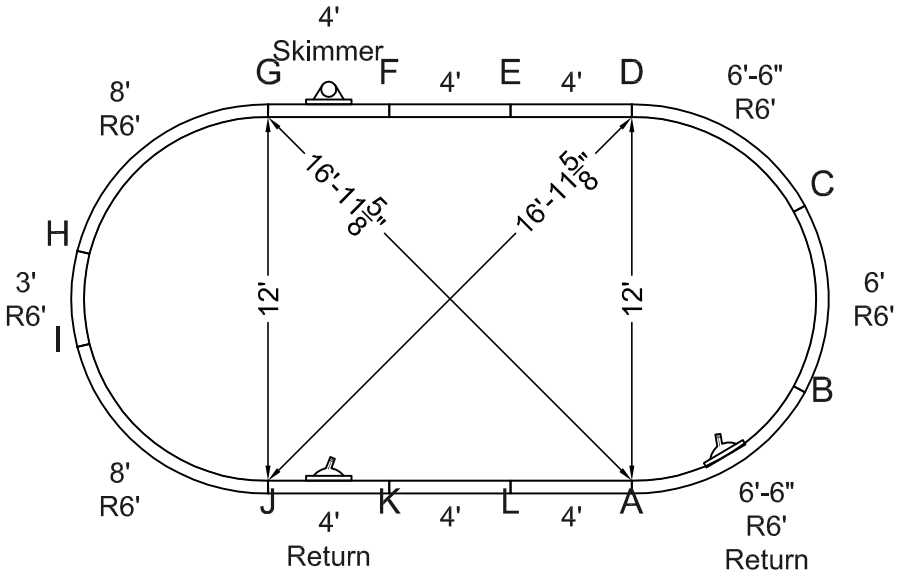

STEEL CHECK

KIT REF# MNB1224-OV-42

MEGNA POOLS
Megna Plastic Packaging Corp.

SIZE: 12' x 28'-2"	SHAPE: OVAL		HAND: N/A	DWG# 12X28 A
PER.: 70'	S.A.: 306.89 ft²	VOL.: 0.00 gal.us	DATE: 21/01/2010	APPROVED:
PER.: 21.34 m	S.A.: 28.51 m²	VOL.: 0.00 liters	DRAWN BY: BCC	

ALL DIMENSIONS ARE FINISHED

MANUFACTURING NOTICE

1- DUE TO UNCERTAIN GROUND VARIANCES POOL WALLS MUST BE INSTALLED A MINIMUM OF 6 INCHES BELOW GRADE
2- BUTTRESS SUPPORTS MUST BE FULLY SUPPORTED INCLUDING SONO TUBES BELOW FROST LEVEL. (4 FEET)
3- 12 INCH CONCRETE COLLAR MINIMUM 24 INCHES PAST STRAIGHT SIDES.
4- FILL REMOVED, TO BE SLOPED AROUND OUTSIDE PERIMETER.

NONCOMPLIANCE VOIDS WARRANTY

5- ALL BARTOP PANELS AVAILABLE IN 42" TO 48" PANEL HEIGHTS.

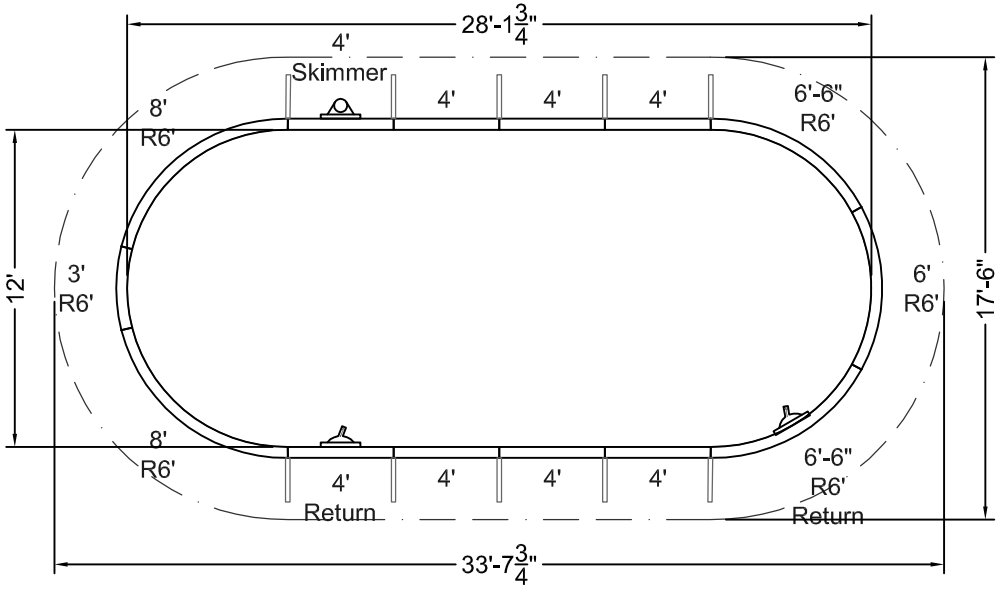

DESCRIPTION	QTY
4' STR	6
4' STR RTN	1
4' STR SKM	1
3'x6' RAD	1
6'x6' RAD	1
6'-6"x6' RAD	1
6'-6"x6' RAD RTN	1
8'x6' RAD	2
BUTTRESS SUPPORTS	10
STD HARDWARE PACK	1

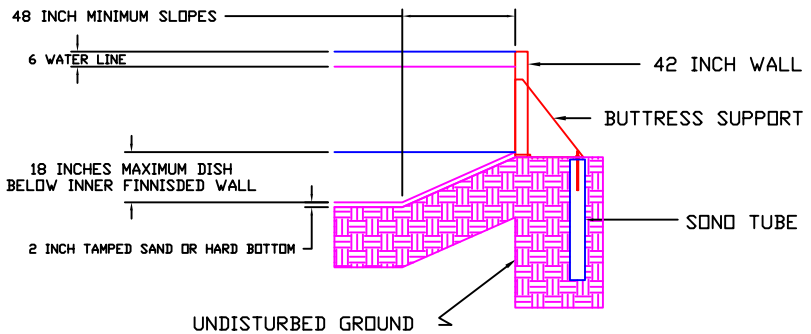

ONGROUND BARTOP POOLS

KIT REF# MNB1228-OV-42

MEGNA POOLS

Megna Plastic Packaging Corp.

SIZE:	SHAPE:	HAND:	DWG#	
12' x 28'-2"	OVAL	N/A	12X28	B

PER.:	70'	S.A.:	306.89 ft²	VOL.:	0.00 gal.us	DATE: 21/01/2010	APPROVED:
PER.:	21.34 m	S.A.:	28.51 m²	VOL.:	0.00 liters	DRAWN BY: BCC	

STAKE OUT

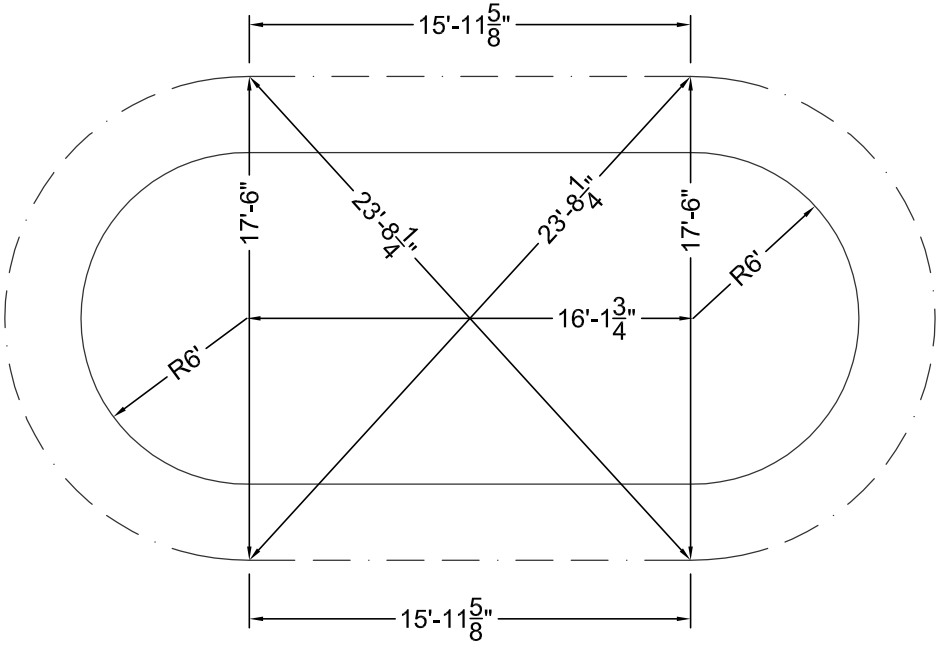

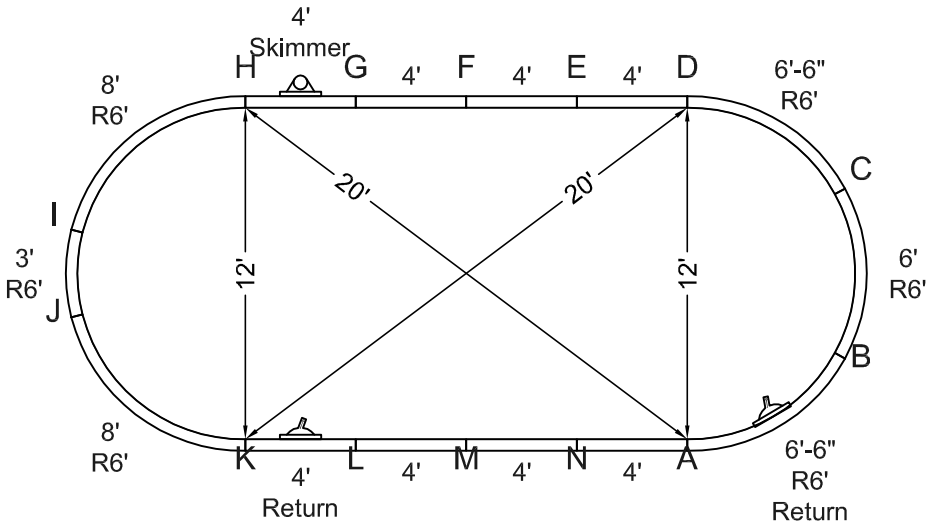

STEEL CHECK

KIT REF# MNB1228-OV-42

MEGNA POOLS
Megna Plastic Packaging Corp.

SIZE:	SHAPE:	HAND:	DWG#	
14' x 28'	OVAL	N/A	14X28	A

PER.:	72'	S.A.:	350.06 ft²	VOL.:	0.00 gal.us	DATE: 21/01/2010	APPROVED:
PER.:	21.95 m	S.A.:	32.52 m²	VOL.:	0.00 liters	DRAWN BY: BCC	

ALL DIMENSIONS ARE FINISHED

MANUFACTURING NOTICE

1- DUE TO UNCERTAIN GROUND VARIANCES POOL WALLS MUST BE INSTALLED A MINIMUM OF 6 INCHES BELOW GRADE
2- BUTTRESS SUPPORTS MUST BE FULLY SUPPORTED INCLUDING SONO TUBES BELOW FROST LEVEL. (4 FEET)
3- 12 INCH CONCRETE COLLAR MINIMUM 24 INCHES PAST STRAIGHT SIDES.
4- FILL REMOVED, TO BE SLOPED AROUND OUTSIDE PERIMETER.

NONCOMPLIANCE VOIDS WARRANTY

5- ALL BARTOP PANELS AVAILABLE IN 42" TO 48" PANEL HEIGHTS.

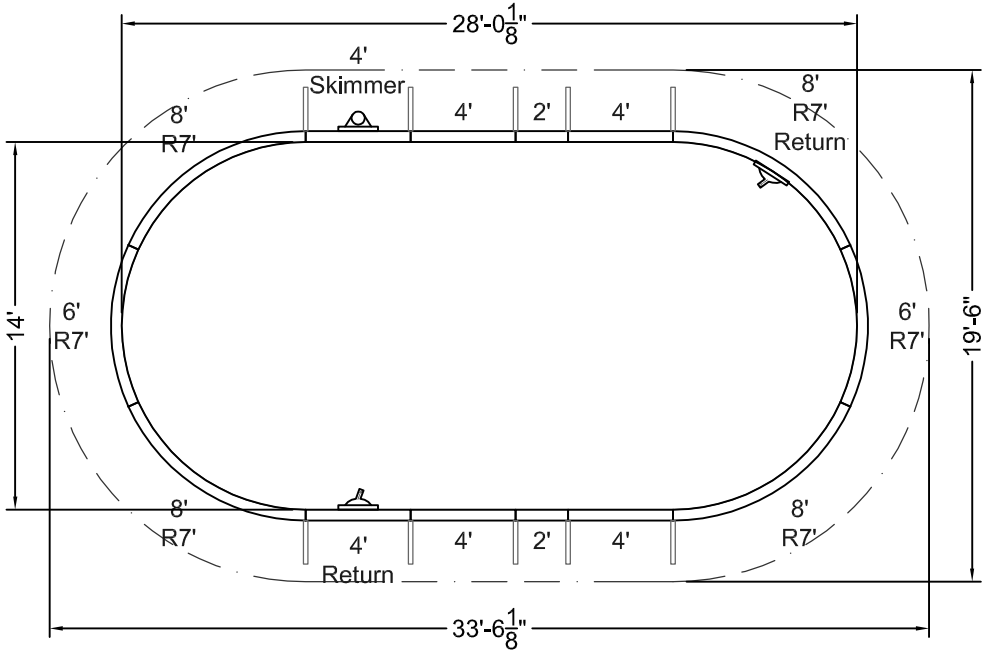

DESCRIPTION	QTY
2' STR	2
4' STR	4
4' STR RTN	1
4' STR SKM	1
6'x7' RAD	2
8'x7' RAD	3
8'x7' RAD RTN	1
BUTTRESS SUPPORTS	10
STD HARDWARE PACK	1

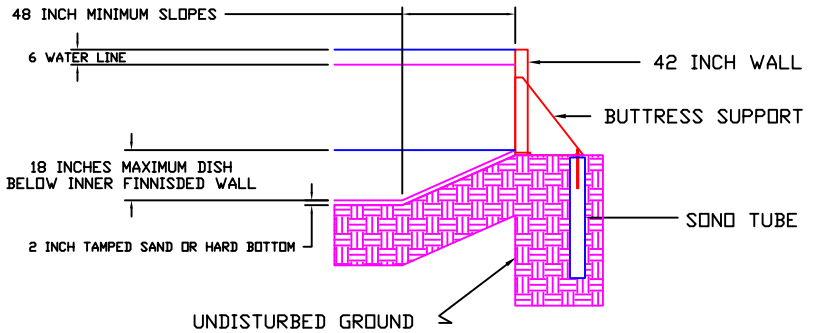

ONGROUND BARTOP POOLS

KIT REF# MNB1428-OV-42

MEGNA POOLS

Megna Plastic Packaging Corp.

SIZE:	SHAPE:	HAND:	DWG#
14' x 28'	OVAL	N/A	14X28 B

PER.:	72'	S.A.:	350.06 ft²	VOL.:	0.00 gal.us
PER.:	21.95 m	S.A.:	32.52 m²	VOL.:	0.00 liters

DATE: 21/01/2010

DRAWN BY: BCC

APPROVED:

STAKE OUT

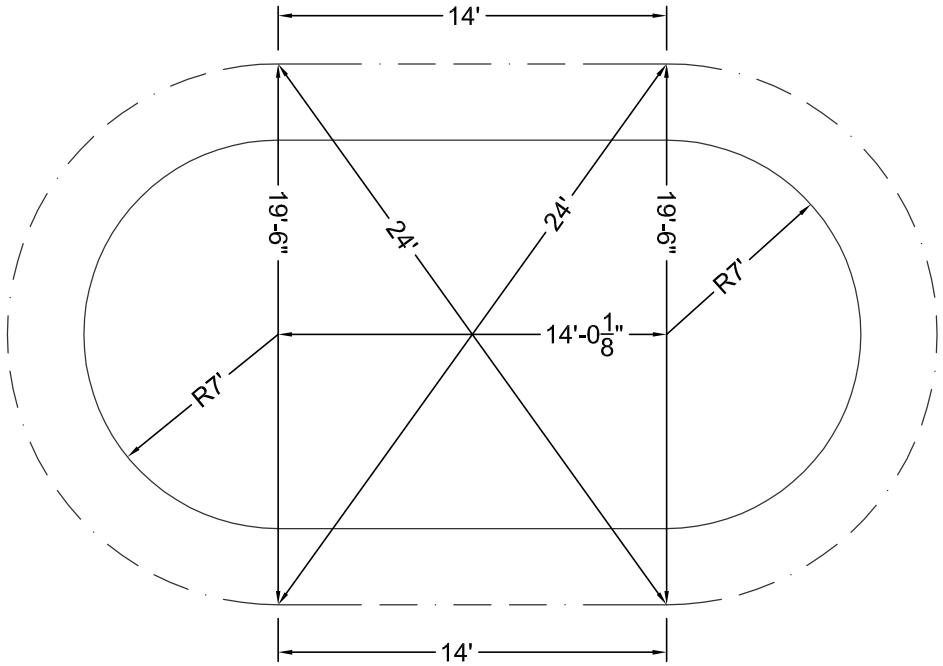

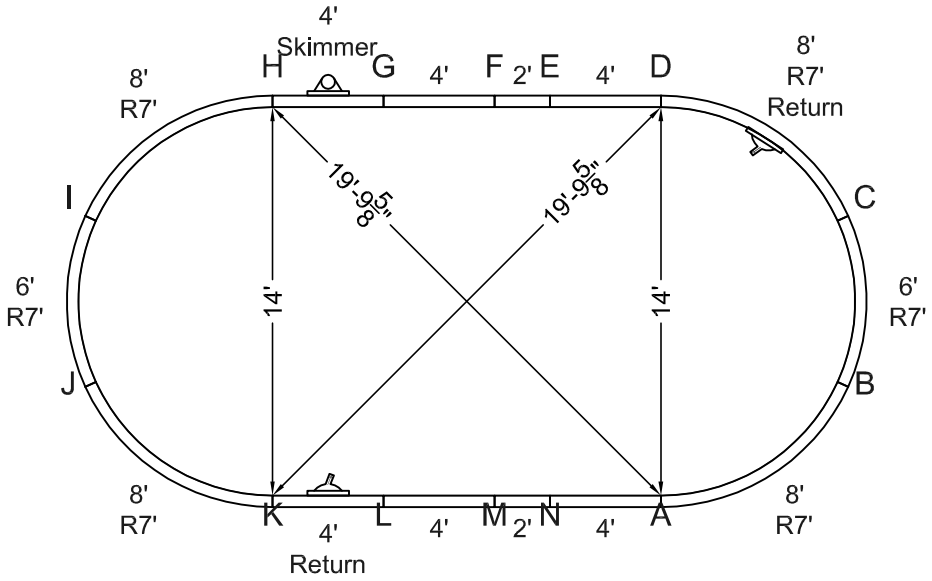

STEEL CHECK

KIT REF# MNB1428-OV-42

MEGNA POOLS
Megna Plastic Packaging Corp.

SIZE:	SHAPE:	HAND:	DWG#
15' x 26'-5"	OVAL	N/A	15X26 A

PER.:	70'	S.A.:	348.21 ft²	VOL.:	0.00 gal.us
PER.:	21.34 m	S.A.:	32.35 m²	VOL.:	0.00 liters

DATE: 21/01/2010 | APPROVED:

DRAWN BY: BCC

ALL DIMENSIONS ARE FINISHED

MANUFACTURING NOTICE

1- DUE TO UNCERTAIN GROUND VARIANCES POOL WALLS MUST BE INSTALLED A MINIMUM OF 6 INCHES BELOW GRADE
2- BUTTRESS SUPPORTS MUST BE FULLY SUPPORTED INCLUDING SONO TUBES BELOW FROST LEVEL. (4 FEET)
3- 12 INCH CONCRETE COLLAR MINIMUM 24 INCHES PAST STRAIGHT SIDES.
4- FILL REMOVED, TO BE SLOPED AROUND OUTSIDE PERIMETER.

NONCOMPLIANCE VOIDS WARRANTY

5- ALL BARTOP PANELS AVAILABLE IN 42" TO 48" PANEL HEIGHTS.

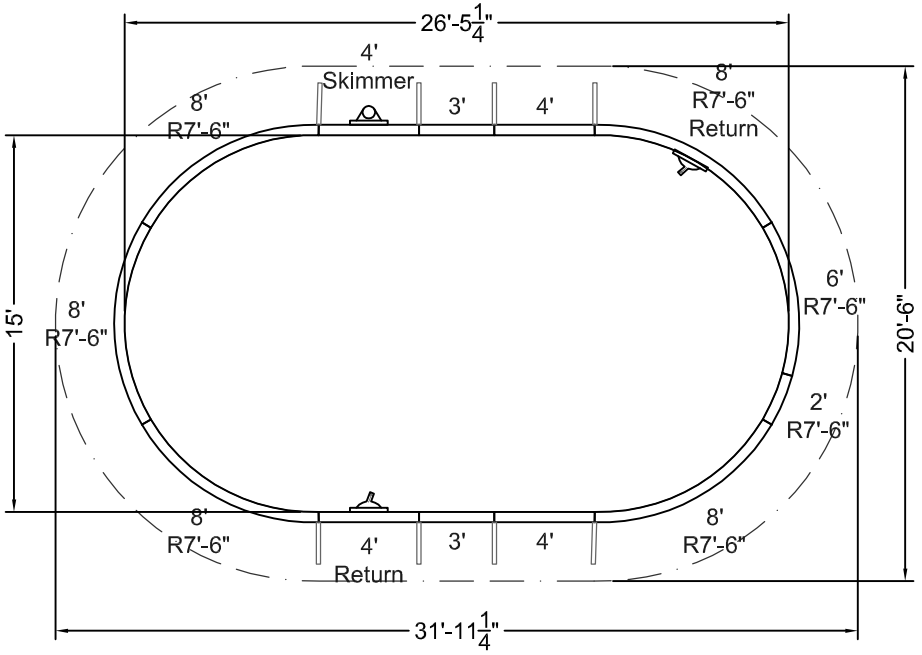

DESCRIPTION	QTY
3' STR	2
4' STR	2
4' STR RTN	1
4' STR SKM	1
2'x7'-6" RAD	1
6'x7'-6" RAD	1
8'x7'-6" RAD	4
8'x7'-6" RAD RTN	1
BUTTRESS SUPPORTS	8
STD HARDWARE PACK	1

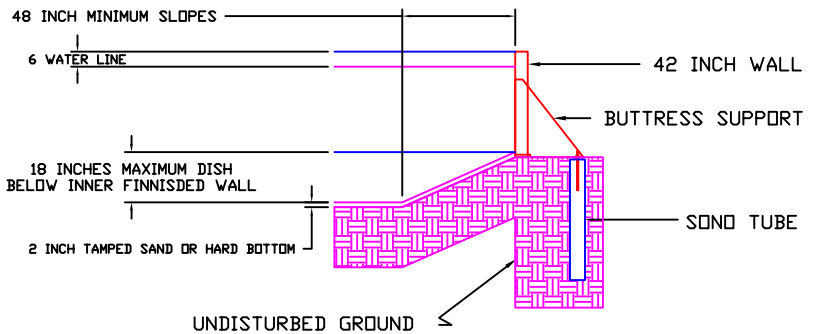

ONGROUND BARTOP POOLS

KIT REF# MNB1526-OV-42

MEGNA POOLS
Megna Plastic Packaging Corp.

SIZE: 15' x 26'-5"	SHAPE: OVAL			HAND: N/A	DWG# 15X26 B
PER.: 70'	S.A.: 348.21 ft²	VOL.: 0.00 gal.us		DATE: 21/01/2010	APPROVED:
PER.: 21.34 m	S.A.: 32.35 m²	VOL.: 0.00 liters		DRAWN BY: BCC	

STAKE OUT

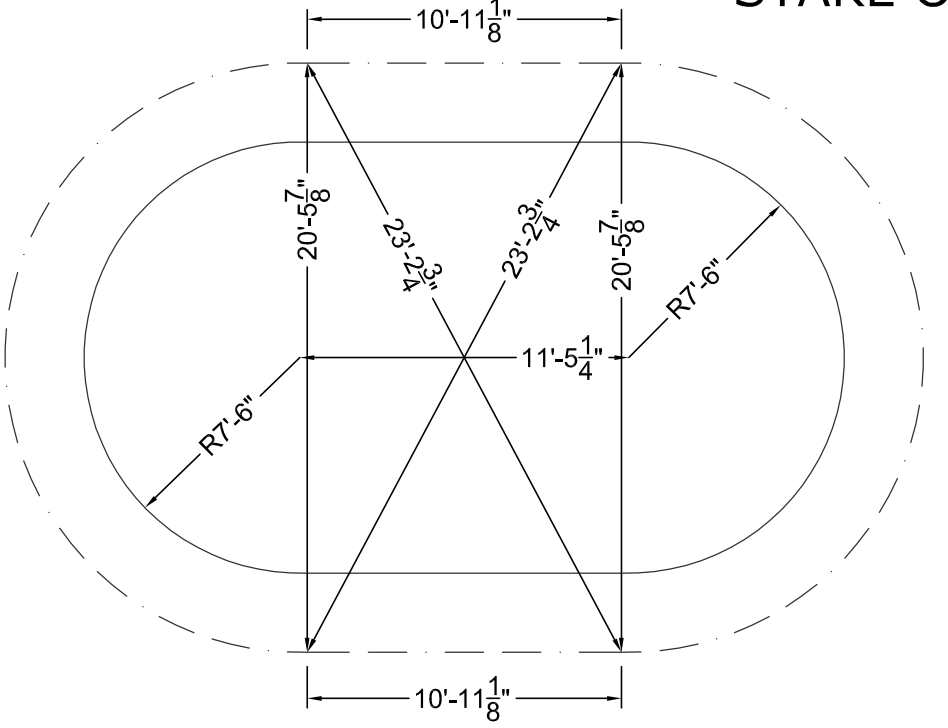

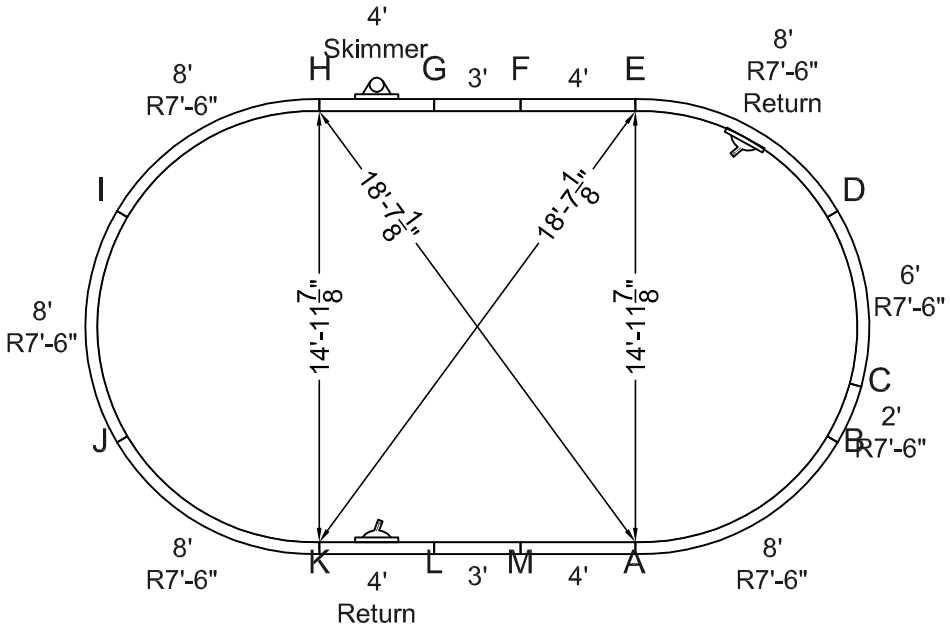

STEEL CHECK

KIT REF# MNB1526-OV-42

MEGNA POOLS

Megna Plastic Packaging Corp.

SIZE: 15' x 29'-5"	SHAPE: OVAL		HAND: N/A	DWG# 15X30 A
PER.: 76'	S.A.: 393.19 ft²	VOL.: 0.00 gal.us	DATE: 21/01/2010	APPROVED:
PER.: 23.16 m	S.A.: 36.53 m²	VOL.: 0.00 liters	DRAWN BY: BCC	

ALL DIMENSIONS ARE FINISHED

MANUFACTURING NOTICE

1- DUE TO UNCERTAIN GROUND VARIANCES POOL WALLS MUST BE INSTALLED A MINIMUM OF 6 INCHES BELOW GRADE
2- BUTTRESS SUPPORTS MUST BE FULLY SUPPORTED INCLUDING SONO TUBES BELOW FROST LEVEL. (4 FEET)
3- 12 INCH CONCRETE COLLAR MINIMUM 24 INCHES PAST STRAIGHT SIDES.
4- FILL REMOVED, TO BE SLOPED AROUND OUTSIDE PERIMETER.

NONCOMPLIANCE VOIDS WARRANTY

5- ALL BARTOP PANELS AVAILABLE IN 42" TO 48" PANEL HEIGHTS.

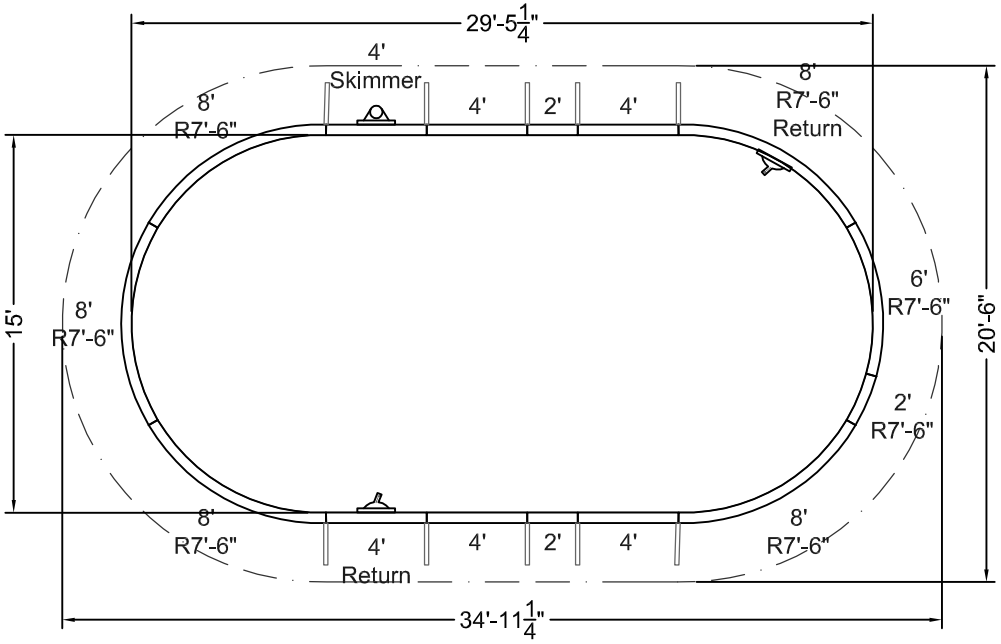

DESCRIPTION	QTY
2' STR	2
4' STR	4
4' STR RTN	1
4' STR SKM	1
2'x7'-6" RAD	1
6'x7'-6" RAD	1
8'x7'-6" RAD	4
8'x7'-6" RAD RTN	1
BUTTRESS SUPPORTS	10
STD HARDWARE PACK	1

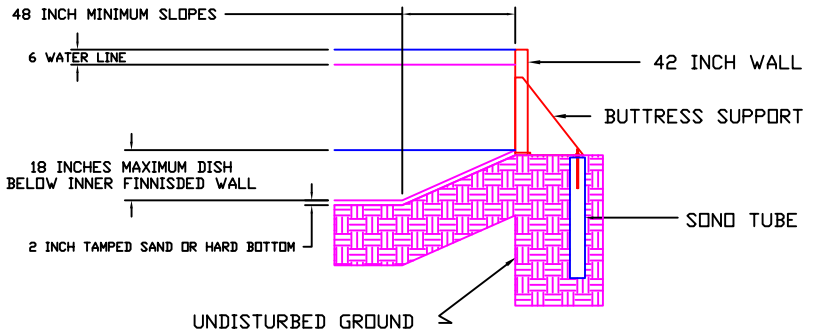

ONGROUND BARTOP POOLS

KIT REF# MNB1530-OV-42

MEGNA POOLS

Megna Plastic Packaging Corp.

SIZE: 15' x 29'-5"	SHAPE: OVAL		HAND: N/A	DWG# 15X30 B
PER.: 76'	S.A.: 393.19 ft²	VOL.: 0.00 gal.us	DATE: 21/01/2010	APPROVED:
PER.: 23.16 m	S.A.: 36.53 m²	VOL.: 0.00 liters	DRAWN BY: BCC	

STAKE OUT

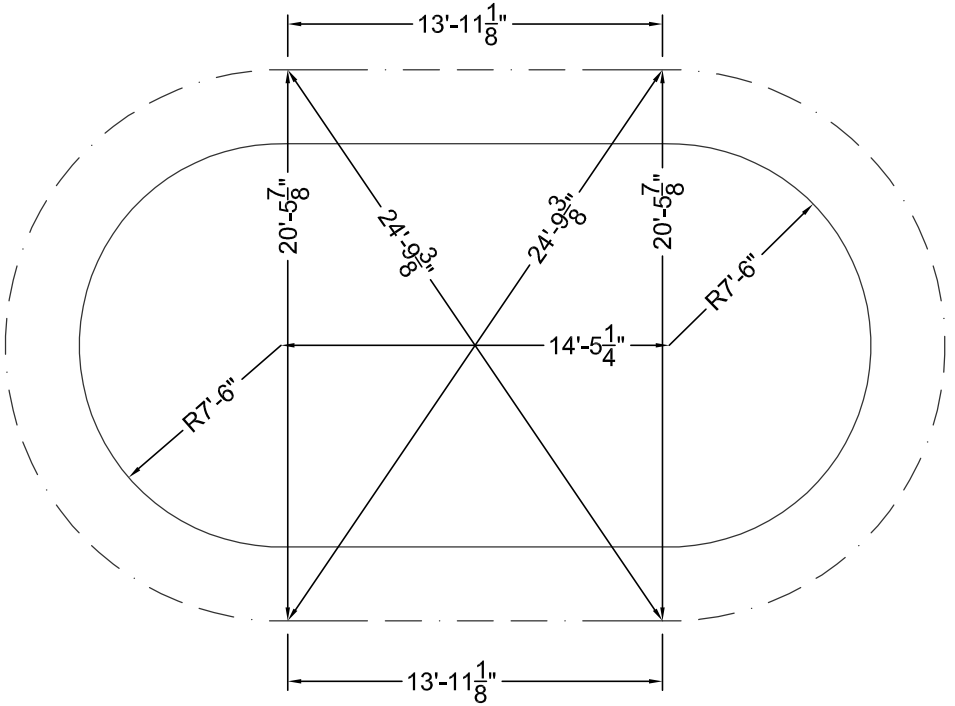

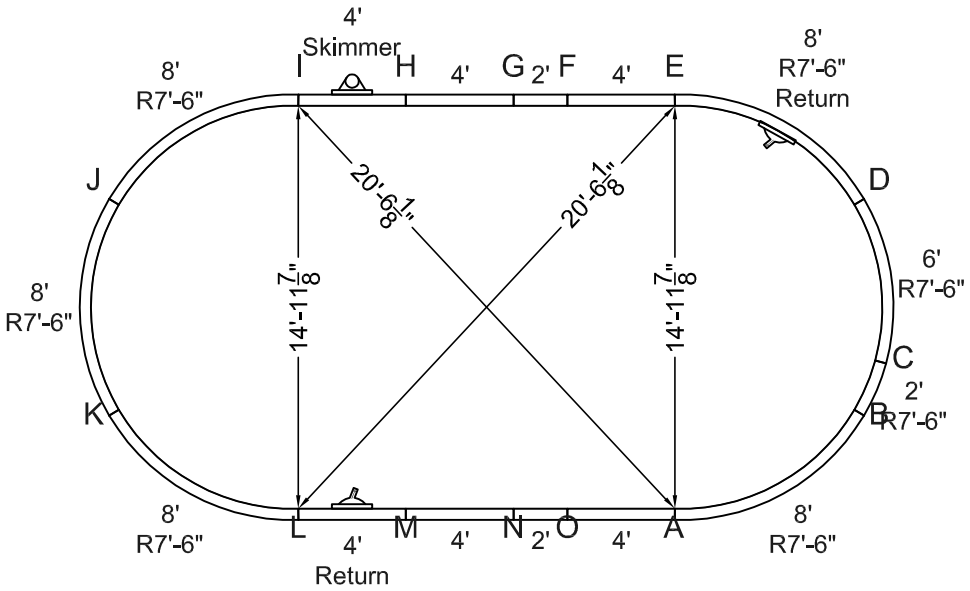

STEEL CHECK

KIT REF# MNB1530-OV-42

MEGNA POOLS
Megna Plastic Packaging Corp.

SIZE: 16' x 31'-10"	SHAPE: OVAL		HAND: N/A	DWG# 16X32 A
PER.: 82'	S.A.: 454.93 ft²	VOL.: 0.00 gal.us	DATE: 02/01/2010	APPROVED:
PER.: 24.99 m	S.A.: 42.26 m²	VOL.: 0.00 liters	DRAWN BY: BCC	

ALL DIMENSIONS ARE FINISHED

MANUFACTURING NOTICE

1- DUE TO UNCERTAIN GROUND VARIANCES POOL WALLS MUST BE INSTALLED A MINIMUM OF 6 INCHES BELOW GRADE
2- BUTTRESS SUPPORTS MUST BE FULLY SUPPORTED INCLUDING SONO TUBES BELOW FROST LEVEL. (4 FEET)
3- 12 INCH CONCRETE COLLAR MINIMUM 24 INCHES PAST STRAIGHT SIDES.
4- FILL REMOVED, TO BE SLOPED AROUND OUTSIDE PERIMETER.

NONCOMPLIANCE VOIDS WARRANTY

5- ALL BARTOP PANELS AVAILABLE IN 42" TO 48" PANEL HEIGHTS.

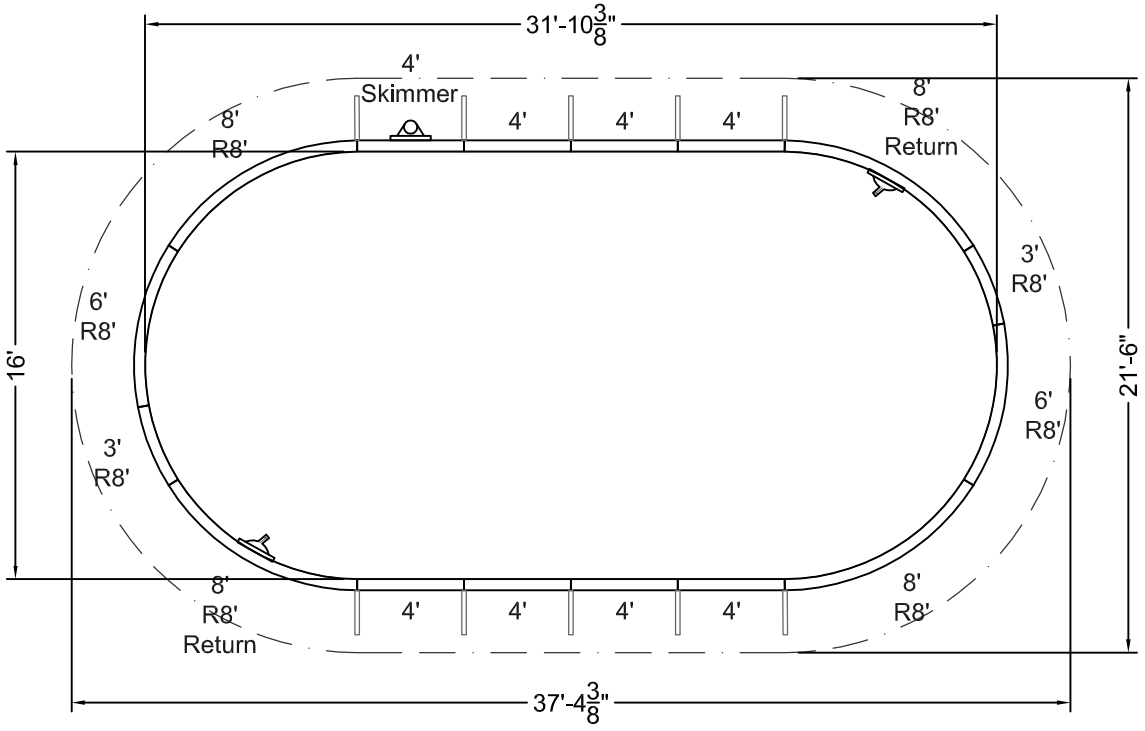

DESCRIPTION	QTY
4' STR	7
4' STR SKM	1
3'x8' RAD	2
6'x8' RAD	2
8'x8' RAD	2
8'x8' RAD RTN	2
BUTTRESS SUPPORTS	10
STD HARDWARE PACK	1

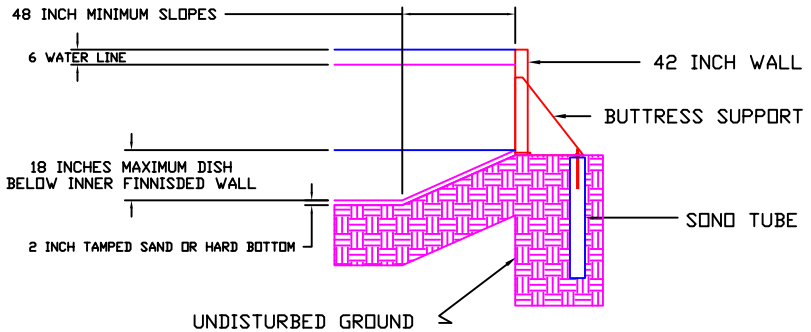

ONGROUND BARTOP POOLS

KIT REF# MNB1632-OV-42

MEGNA POOLS

Megna Plastic Packaging Corp.

SIZE: 16' x 31'-10"		SHAPE: OVAL				HAND: N/A	DWG# 16X32 B
PER.:	82'	S.A.:	454.93 ft²	VOL.:	0.00 gal.us	DATE: 02/01/2010	APPROVED:
PER.:	24.99 m	S.A.:	42.26 m²	VOL.:	0.00 liters	DRAWN BY: BCC	

STAKE OUT

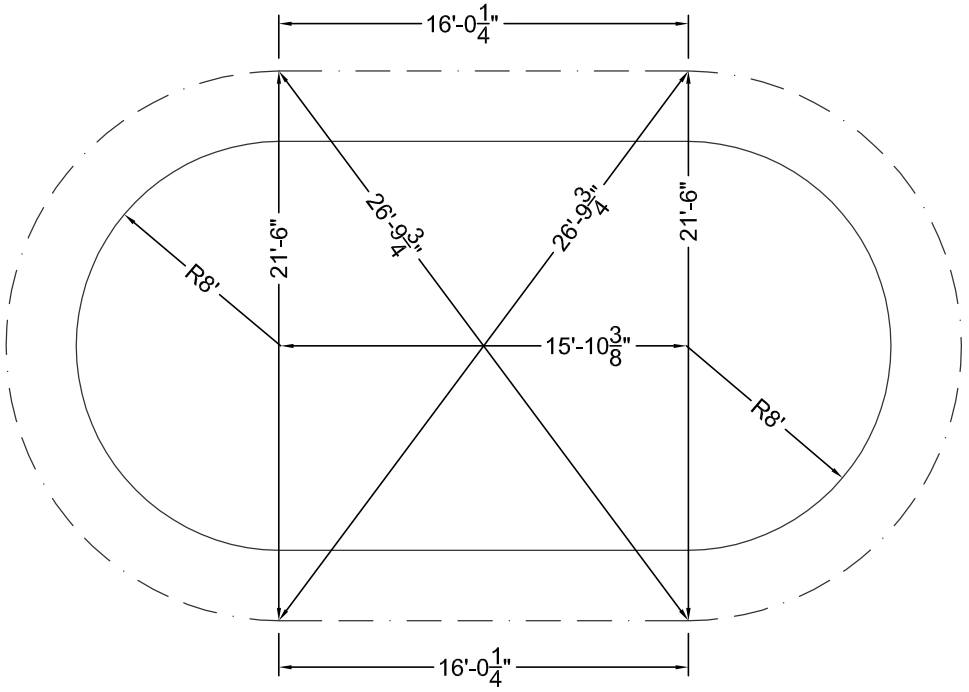

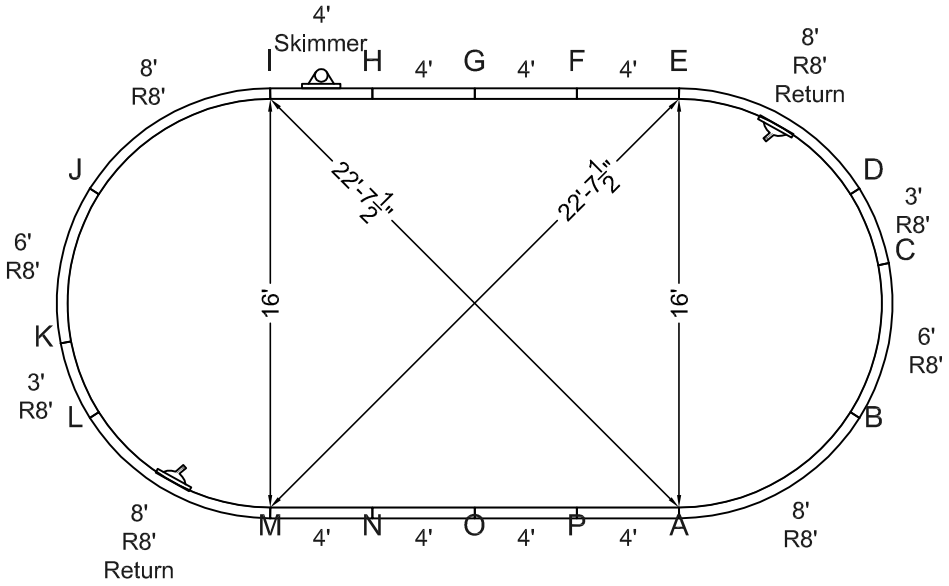

STEEL CHECK

KIT REF# MNB1632-OV-42

MEGNA POOLS
Megna Plastic Packaging Corp.

SIZE:	SHAPE:	HAND:	DWG#	
17' x 30'-4"	OVAL	N/A	17X31	A

PER.:	80'	S.A.:	452.99 ft²	VOL.:	0.00 gal.us	DATE: 22/01/2010	APPROVED:
PER.:	24.38 m	S.A.:	42.08 m²	VOL.:	0.00 liters	DRAWN BY: BCC	

ALL DIMENSIONS ARE FINISHED

MANUFACTURING NOTICE

1- DUE TO UNCERTAIN GROUND VARIANCES POOL WALLS MUST BE INSTALLED A MINIMUM OF 6 INCHES BELOW GRADE
2- BUTTRESS SUPPORTS MUST BE FULLY SUPPORTED INCLUDING SONO TUBES BELOW FROST LEVEL. (4 FEET)
3- 12 INCH CONCRETE COLLAR MINIMUM 24 INCHES PAST STRAIGHT SIDES.
4- FILL REMOVED, TO BE SLOPED AROUND OUTSIDE PERIMETER.

NONCOMPLIANCE VOIDS WARRANTY

5- ALL BARTOP PANELS AVAILABLE IN 42" TO 48" PANEL HEIGHTS.

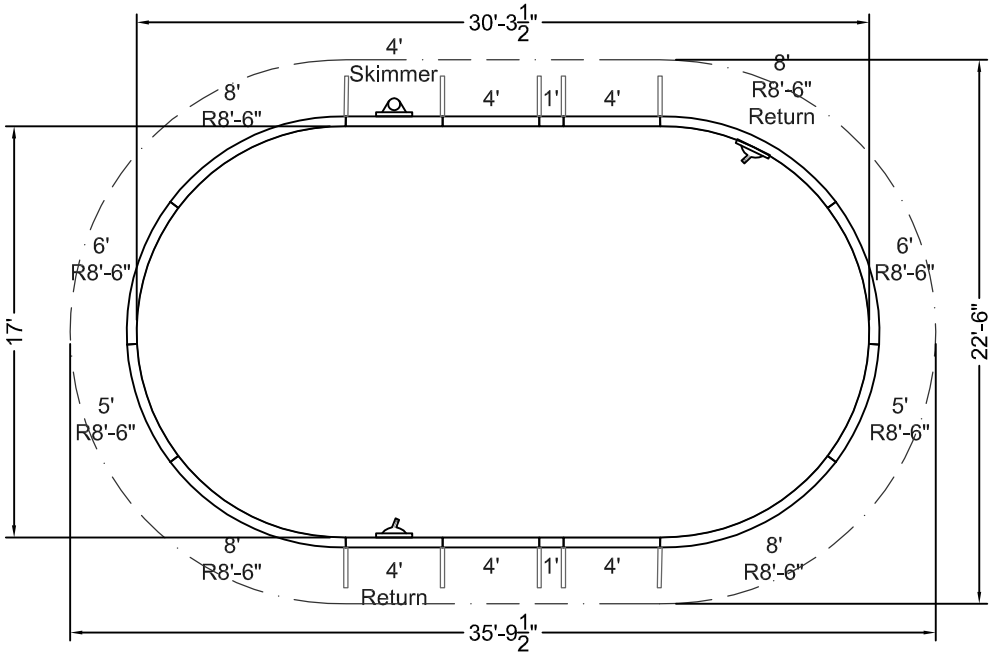

DESCRIPTION	QTY
1' STR	2
4' STR	4
4' STR RTN	1
4' STR SKM	1
5'x8'-6" RAD	2
6'x8'-6" RAD	2
8'x8'-6" RAD	3
8'x8'-6" RAD RTN	1
BUTTRESS SUPPORTS	10
STD HARDWARE PACK	1

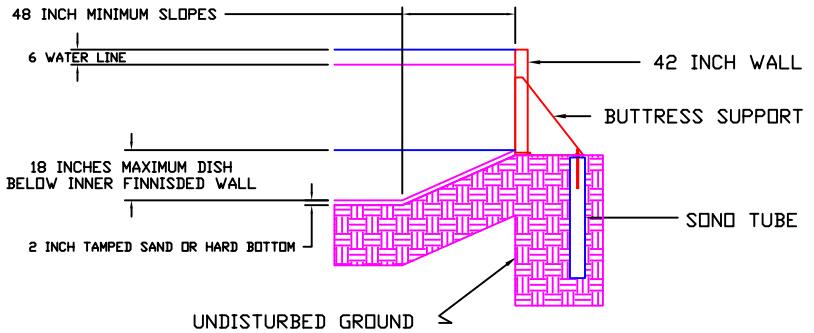

ONGROUND BARTOP POOLS

KIT REF# MNB1731-OV-42

MEGNA POOLS
Megna Plastic Packaging Corp.

SIZE: 17' x 30'-4"	SHAPE: OVAL		HAND: N/A	DWG# 17X31 B
PER.: 80'	S.A.: 452.99 ft²	VOL.: 0.00 gal.us	DATE: 22/01/2010	APPROVED:
PER.: 24.38 m	S.A.: 42.08 m²	VOL.: 0.00 liters	DRAWN BY: BCC	

STAKE OUT

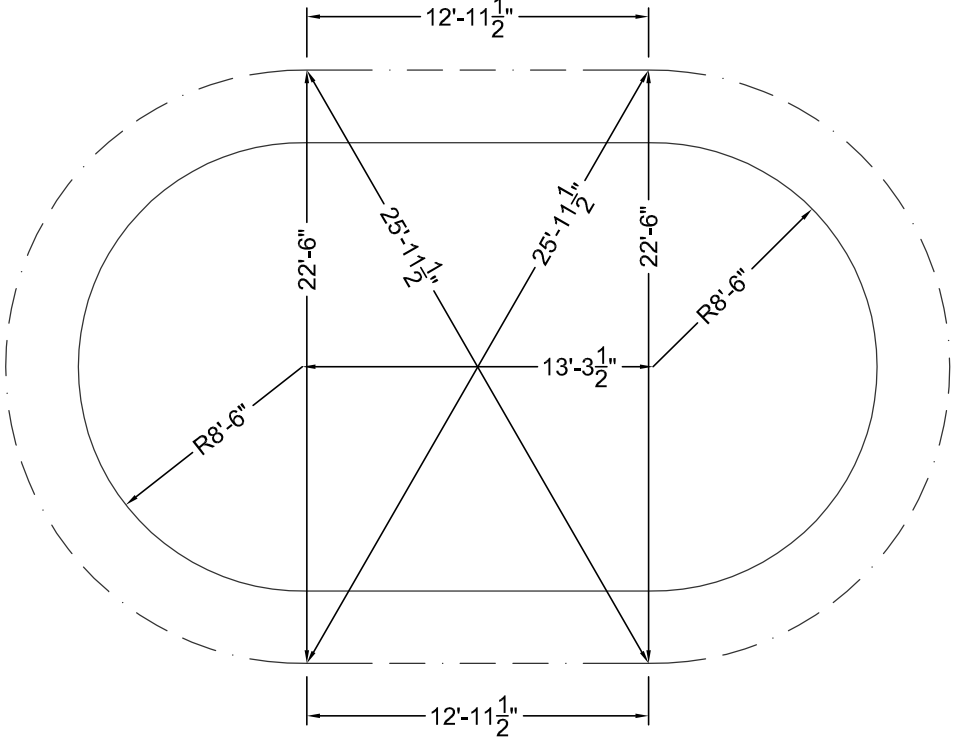

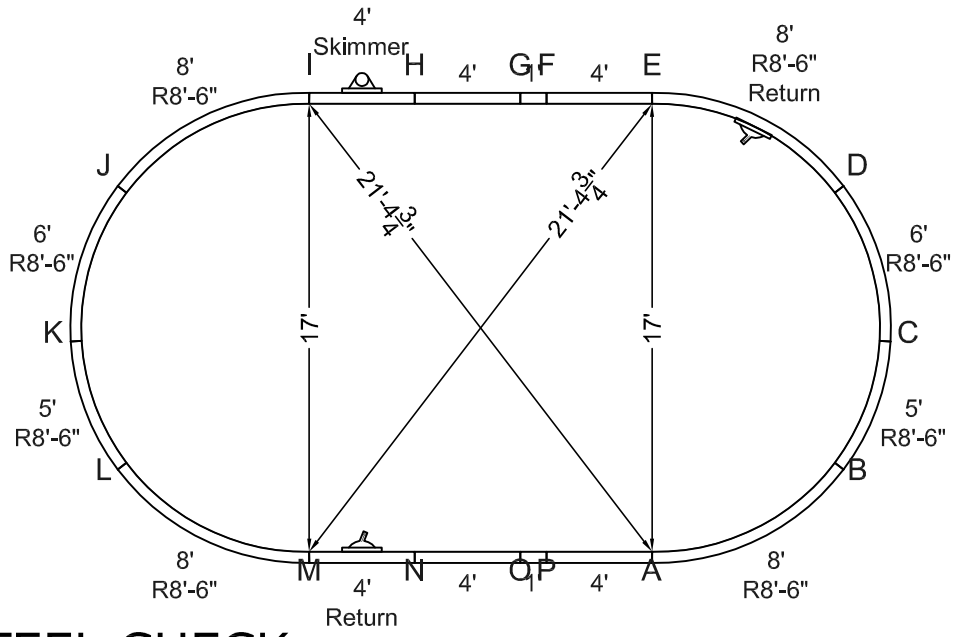

STEEL CHECK

KIT REF# MNB1731-OV-42

MEGNA POOLS
Megna Plastic Packaging Corp.

SIZE:	SHAPE:	HAND:	DWG#	
17' x 32'-4"	OVAL	N/A	17X33	A

PER.:	84'	S.A.:	486.98 ft²	VOL.:	0.00 gal.us	DATE: 22/01/2010
PER.:	25.60 m	S.A.:	45.24 m²	VOL.:	0.00 liters	DRAWN BY: BCC

APPROVED:

ALL DIMENSIONS ARE FINISHED

MANUFACTURING NOTICE

1- DUE TO UNCERTAIN GROUND VARIANCES POOL WALLS MUST BE INSTALLED A MINIMUM OF 6 INCHES BELOW GRADE
2- BUTTRESS SUPPORTS MUST BE FULLY SUPPORTED INCLUDING SONO TUBES BELOW FROST LEVEL. (4 FEET)
3- 12 INCH CONCRETE COLLAR MINIMUM 24 INCHES PAST STRAIGHT SIDES.
4- FILL REMOVED, TO BE SLOPED AROUND OUTSIDE PERIMETER.

NONCOMPLIANCE VOIDS WARRANTY

5- ALL BARTOP PANELS AVAILABLE IN 42" TO 48" PANEL HEIGHTS.

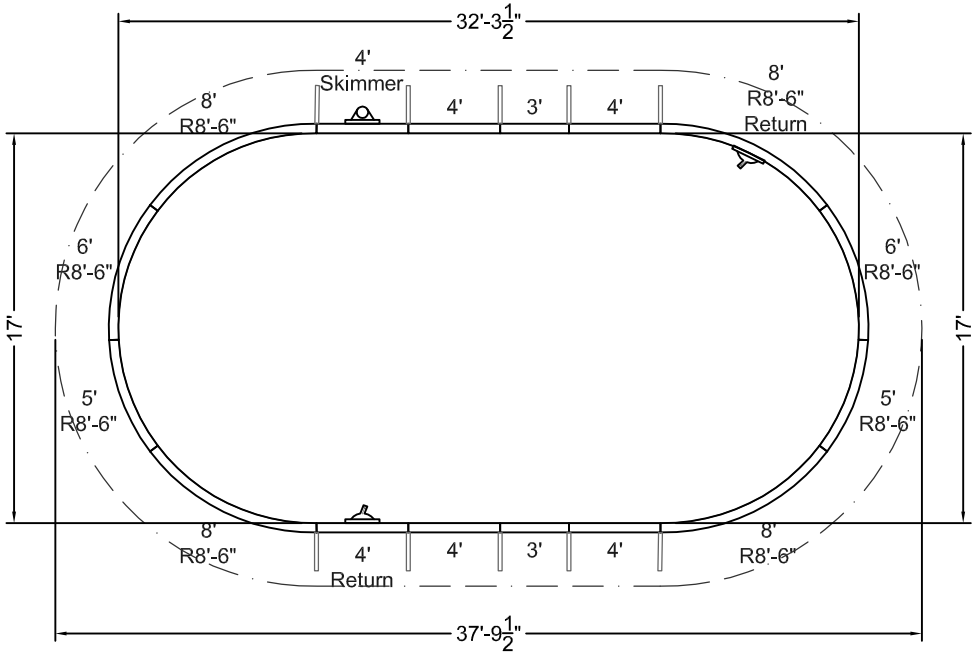

DESCRIPTION	QTY
3' STR	2
4' STR	4
4' STR RTN	1
4' STR SKM	1
5'x8'-6" RAD	2
6'x8'-6" RAD	2
8'x8'-6" RAD	3
8'x8'-6" RAD RTN	1
BUTTRESS SUPPORTS	10
STD HARDWARE PACK	1

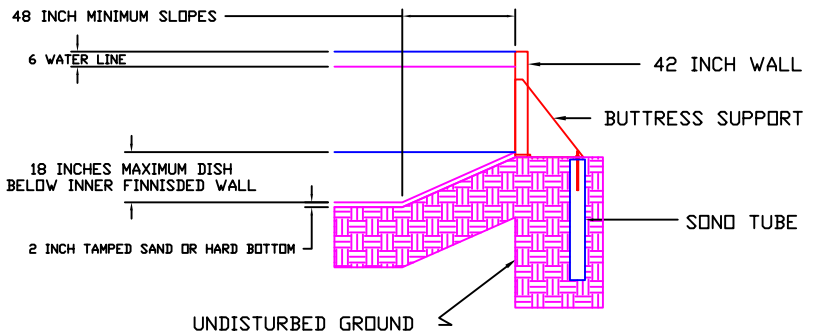

ONGROUND BARTOP POOLS

KIT REF# MNB1733-OV-42

MEGNA POOLS

Megna Plastic Packaging Corp.

SIZE: 17' x 32'-4"	SHAPE: OVAL		HAND: N/A	DWG# 17X33 B
PER.: 84'	S.A.: 486.98 ft²	VOL.: 0.00 gal.us	DATE: 22/01/2010	APPROVED:
PER.: 25.60 m	S.A.: 45.24 m²	VOL.: 0.00 liters	DRAWN BY: BCC	

STAKE OUT

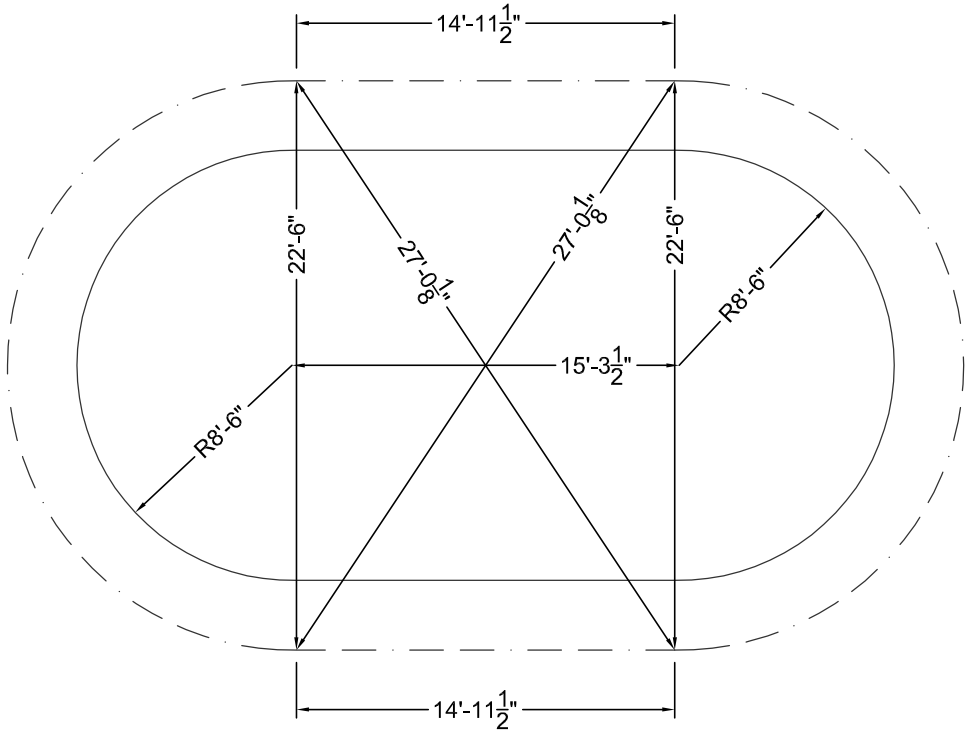

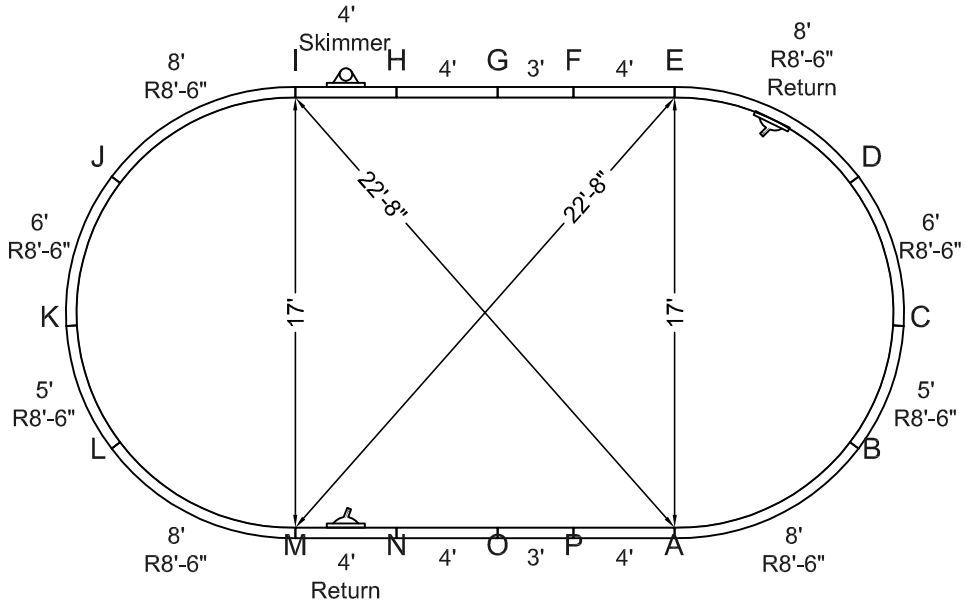

STEEL CHECK

KIT REF# MNB1733-OV-42

MEGNA POOLS
Megna Plastic Packaging Corp.

SIZE:	SHAPE:	HAND:	DWG#
11'-11" x 11'-11"	ROUND	N/A	12FT A

PER.:	37'-6"	S.A.:	111.91 ft²	VOL.:	0.00 gal.us
PER.:	11.43 m	S.A.:	10.40 m²	VOL.:	0.00 liters

DATE: 28/01/2010 | APPROVED:
DRAWN BY: BCC

ALL DIMENSIONS ARE FINISHED

MANUFACTURING NOTICE

1- DUE TO UNCERTAIN GROUND VARIANCES POOL WALLS MUST BE INSTALLED A MINIMUM OF 6 INCHES BELOW GRADE
2- BUTTRESS SUPPORTS MUST BE FULLY SUPPORTED INCLUDING SONO TUBES BELOW FROST LEVEL. (4 FEET)
3- 12 INCH CONCRETE COLLAR MINIMUM 24 INCHES PAST STRAIGHT SIDES.
4- FILL REMOVED, TO BE SLOPED AROUND OUTSIDE PERIMETER.

NONCOMPLIANCE VOIDS WARRANTY

5- ALL BARTOP PANELS AVAILABLE IN 42" TO 48" PANEL HEIGHTS.

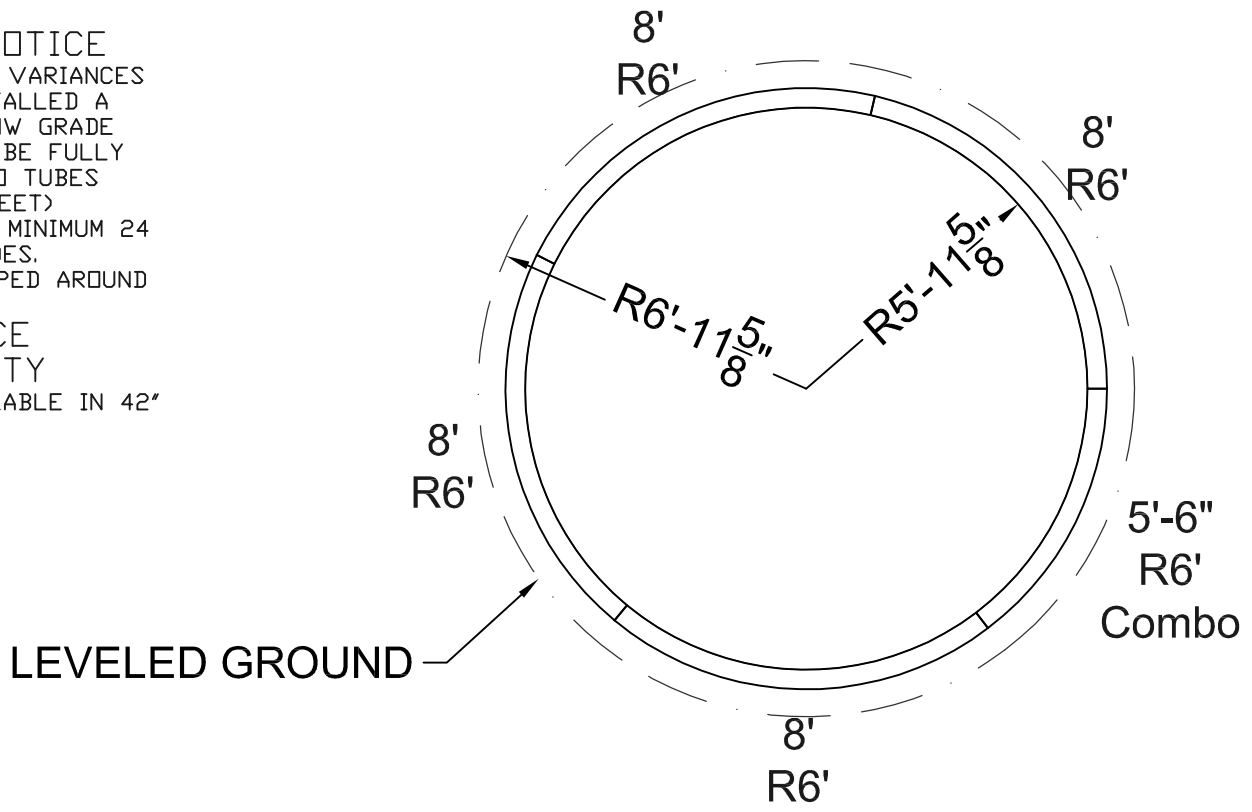

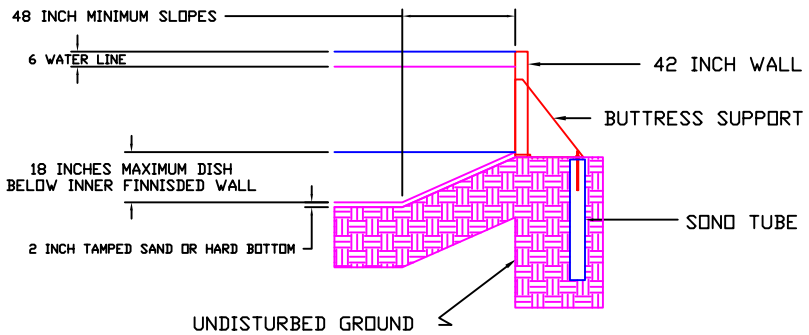

DESCRIPTION	QTY
5'-6"x6'-0" RAD CBO	1
8'x6'-0" RAD	4
STD HARDWARE PACK	1

ONGROUND BARTOP POOLS

KIT REF# MNB1111-RD-42

MEGNA POOLS
Megna Plastic Packaging Corp.

SIZE:	SHAPE:	HAND:	DWG#
11'-11" x 11'-11"	ROUND	N/A	12FT B

PER.:	37'-6"	S.A.:	111.91 ft²	VOL.:	0.00 gal.us
PER.:	11.43 m	S.A.:	10.40 m²	VOL.:	0.00 liters

DATE: 28/01/2010
DRAWN BY: BCC
APPROVED:

STAKE OUT

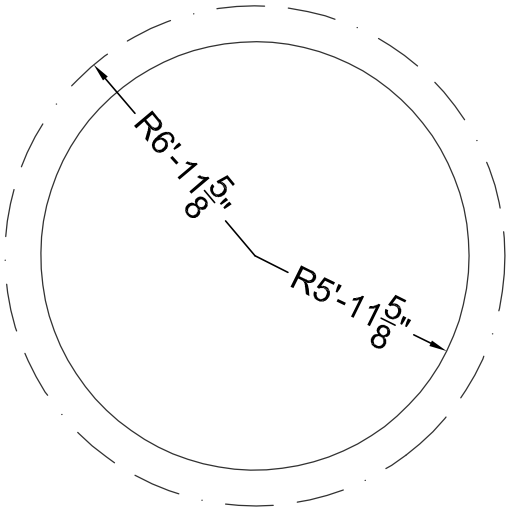

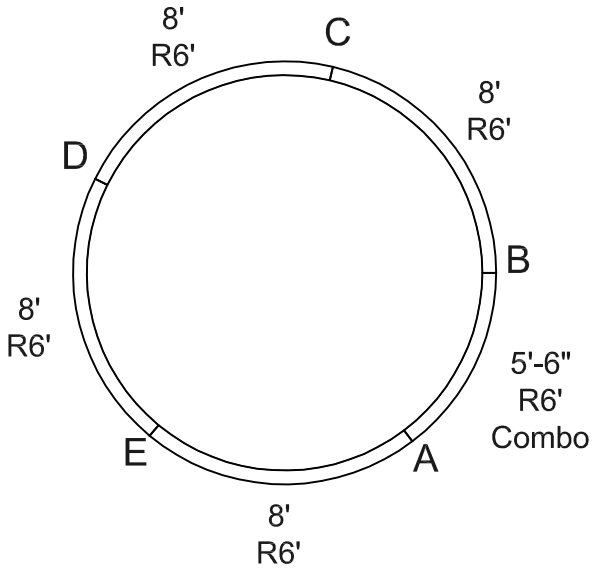

STEEL CHECK

KIT REF# MNB1111-RD-42

MEGNA POOLS
Megna Plastic Packaging Corp.

SIZE: 15'-3" x 15'-3"	SHAPE: ROUND		HAND: N/A	DWG# 15 FT A
PER.: 48'	S.A.: 183.35 ft²	VOL.: 0.00 gal.us	DATE: 28/01/2010	APPROVED:
PER.: 14.63 m	S.A.: 17.03 m²	VOL.: 0.00 liters	DRAWN BY: BCC	

ALL DIMENSIONS ARE FINISHED

MANUFACTURING NOTICE

1- DUE TO UNCERTAIN GROUND VARIANCES POOL WALLS MUST BE INSTALLED A MINIMUM OF 6 INCHES BELOW GRADE
2- BUTTRESS SUPPORTS MUST BE FULLY SUPPORTED INCLUDING SONO TUBES BELOW FROST LEVEL. (4 FEET)
3- 12 INCH CONCRETE COLLAR MINIMUM 24 INCHES PAST STRAIGHT SIDES.
4- FILL REMOVED, TO BE SLOPED AROUND OUTSIDE PERIMETER.

NONCOMPLIANCE VOIDS WARRANTY

5- ALL BARTOP PANELS AVAILABLE IN 42" TO 48" PANEL HEIGHTS.

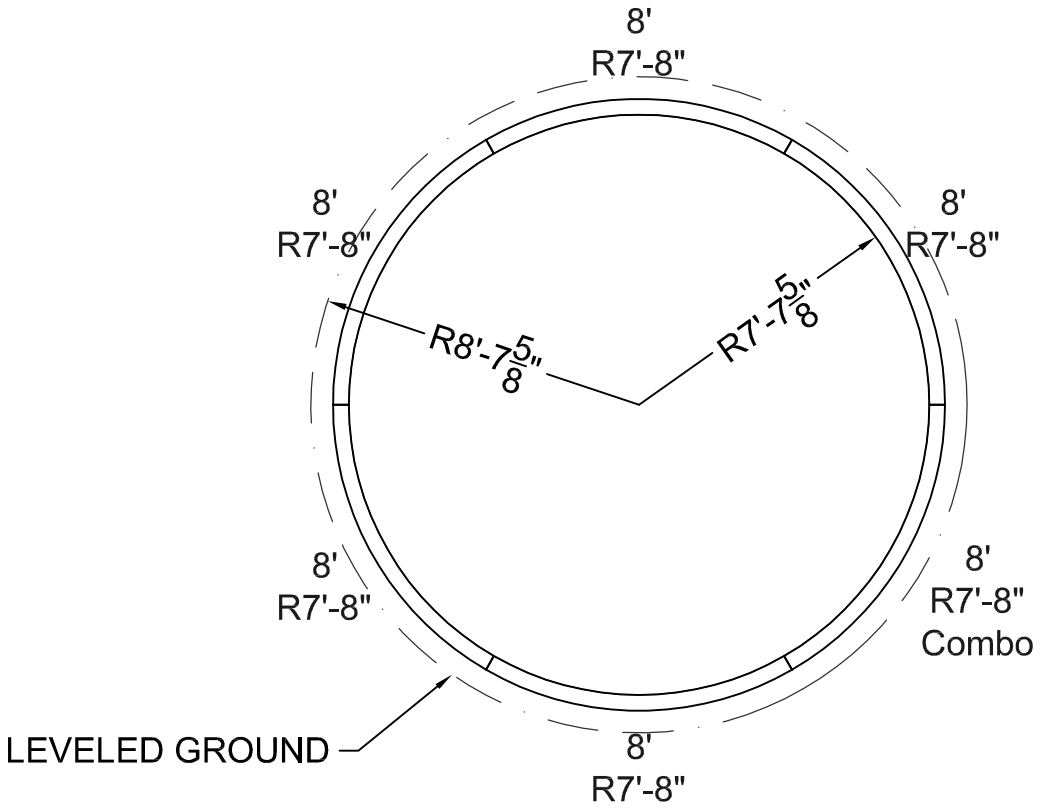

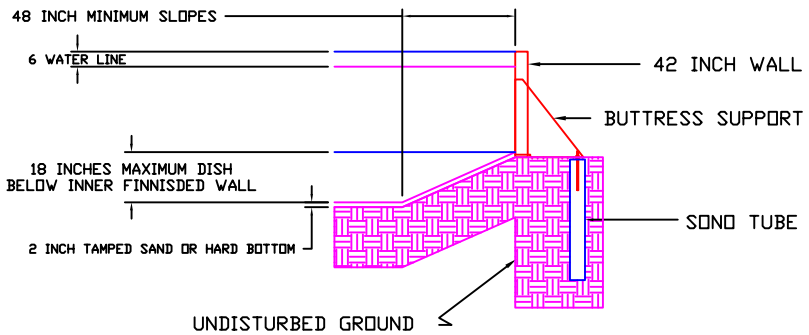

DESCRIPTION	QTY
8'x7'-8" RAD	5
8'x7'-8" RAD CBO	1
STD HARDWARE PACK	1

ONGROUND BARTOP POOLS

KIT REF# MNB1503-RD-42

MEGNA POOLS
Megna Plastic Packaging Corp.

SIZE: 15'-3" x 15'-3"		SHAPE: ROUND			HAND: N/A	DWG# 15 FT B	
PER.:	48'	S.A.:	183.35 ft²	VOL.: 0.00 gal.us	DATE: 28/01/2010	APPROVED:	
PER.:	14.63 m	S.A.:	17.03 m²	VOL.: 0.00 liters	DRAWN BY: BCC		

STAKE OUT

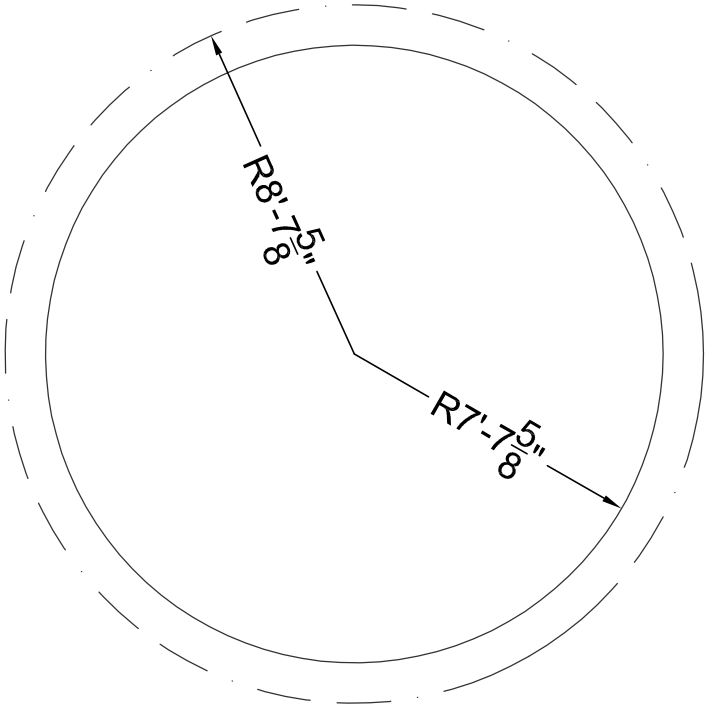

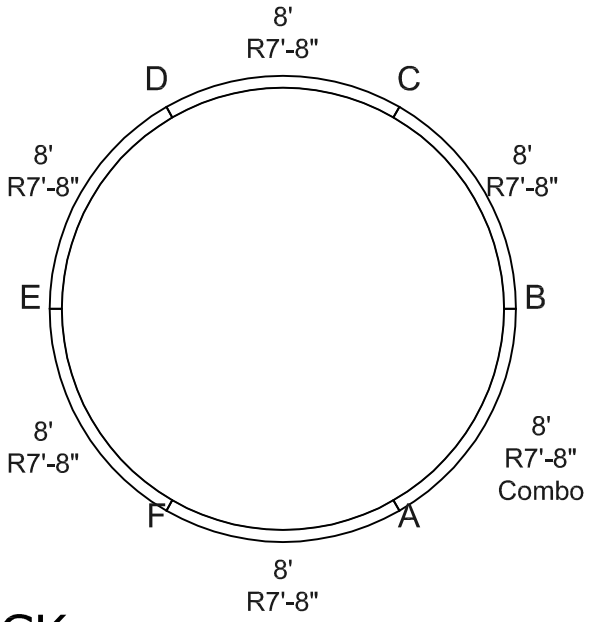

STEEL CHECK

KIT REF# MNB1503-RD-42

MEGNA POOLS
Megna Plastic Packaging Corp.

SIZE:	SHAPE:	HAND:	DWG#
17'-2" x 17'-2"	ROUND	N/A	17 FT A

PER.:	54'	S.A.:	232.05 ft²	VOL.:	0.00 gal.us
PER.:	16.46 m	S.A.:	21.56 m²	VOL.:	0.00 liters

DATE: 28/01/2010 | APPROVED:

DRAWN BY: BCC

ALL DIMENSIONS ARE FINISHED

MANUFACTURING NOTICE

1- DUE TO UNCERTAIN GROUND VARIANCES POOL WALLS MUST BE INSTALLED A MINIMUM OF 6 INCHES BELOW GRADE
2- BUTTRESS SUPPORTS MUST BE FULLY SUPPORTED INCLUDING SONO TUBES BELOW FROST LEVEL. (4 FEET)
3- 12 INCH CONCRETE COLLAR MINIMUM 24 INCHES PAST STRAIGHT SIDES.
4- FILL REMOVED, TO BE SLOPED AROUND OUTSIDE PERIMETER.

NONCOMPLIANCE VOIDS WARRANTY

5- ALL BARTOP PANELS AVAILABLE IN 42" TO 48" PANEL HEIGHTS.

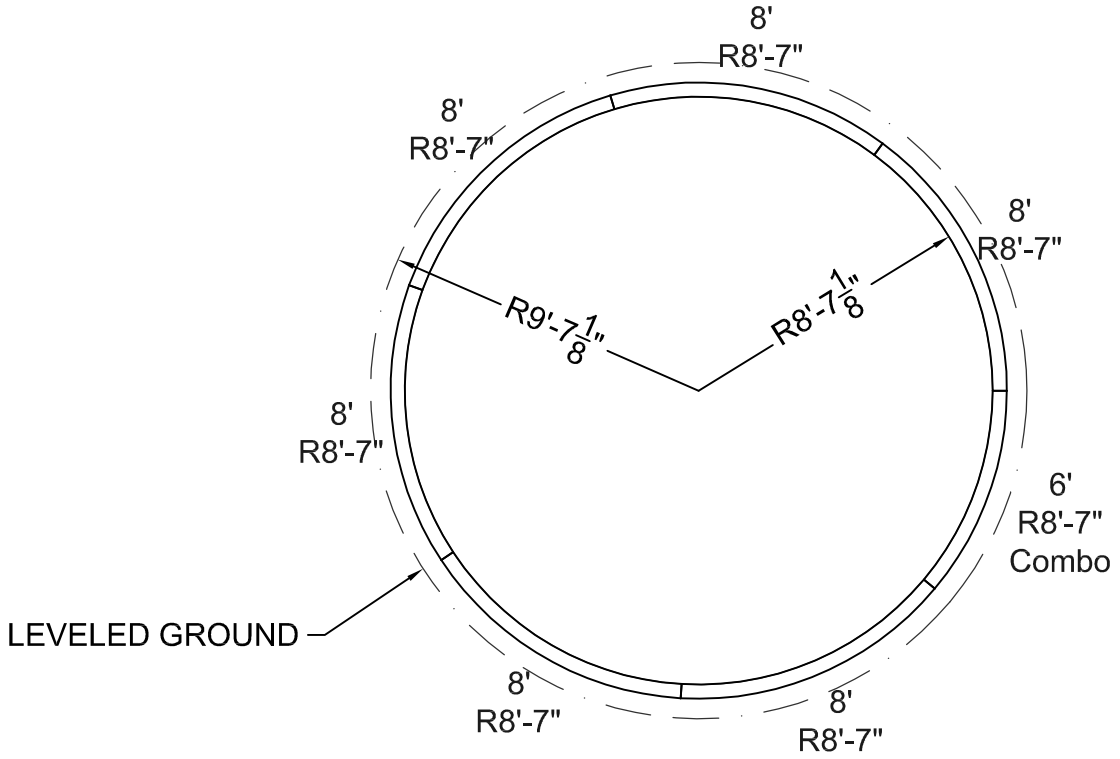

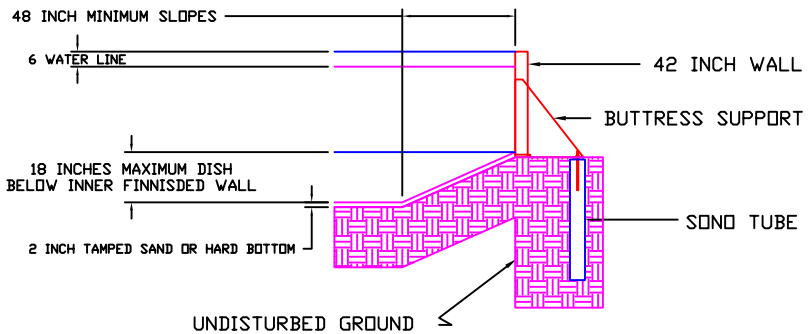

DESCRIPTION	QTY
6'x8'-7" RAD CBO	1
8'x8'-7" RAD	6
STD HARDWARE PACK	1

ONGROUND BARTOP POOLS

KIT REF# MNB1702-RD-42

MEGNA POOLS

Megna Plastic Packaging Corp.

SIZE:	SHAPE:	HAND:	DWG#
17'-2" x 17'-2"	ROUND	N/A	17 FT B

PER.:	54'	S.A.:	232.05 ft²	VOL.:	0.00 gal.us	DATE: 28/01/2010	APPROVED:
PER.:	16.46 m	S.A.:	21.56 m²	VOL.:	0.00 liters	DRAWN BY: BCC	

STAKE OUT

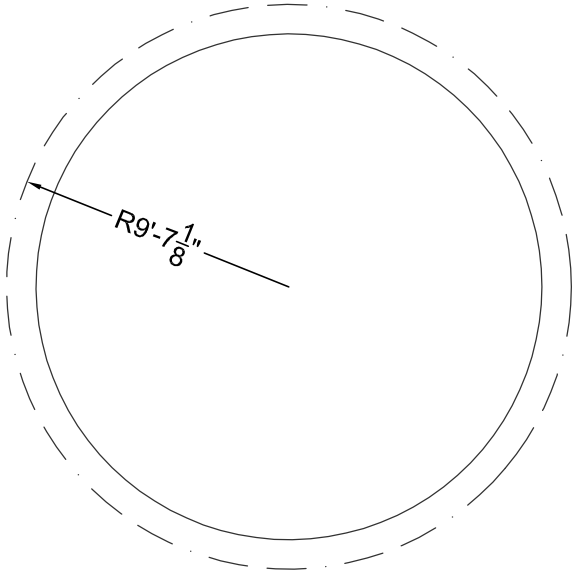

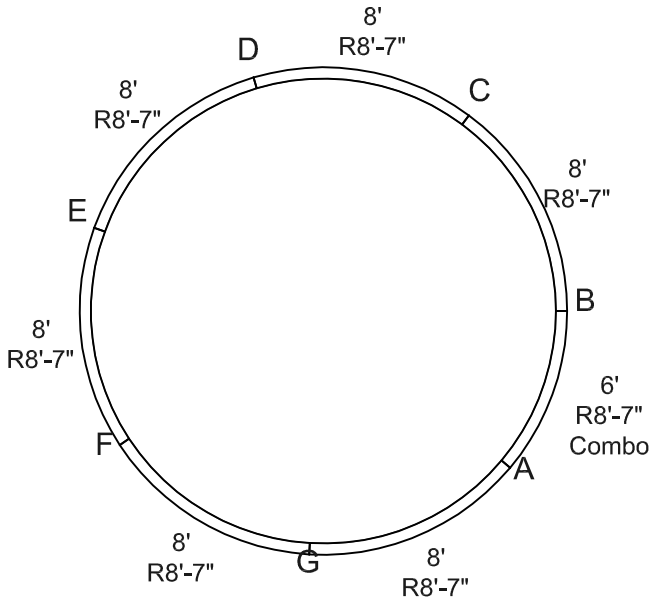

STEEL CHECK

KIT REF# MNB1702-RD-42

MEGNA POOLS
Megna Plastic Packaging Corp.

SIZE:	SHAPE:	HAND:	DWG#
17'-10" x 17'-10"	ROUND	N/A	18 FT A

PER.: 56'	S.A.: 249.55 ft²	VOL.: 0.00 gal.us	DATE: 28/01/2010	APPROVED:
PER.: 17.07 m	S.A.: 23.18 m²	VOL.: 0.00 liters	DRAWN BY: BCC	

ALL DIMENSIONS ARE FINISHED

MANUFACTURING NOTICE

1- DUE TO UNCERTAIN GROUND VARIANCES POOL WALLS MUST BE INSTALLED A MINIMUM OF 6 INCHES BELOW GRADE
2- BUTTRESS SUPPORTS MUST BE FULLY SUPPORTED INCLUDING SONO TUBES BELOW FROST LEVEL. (4 FEET)
3- 12 INCH CONCRETE COLLAR MINIMUM 24 INCHES PAST STRAIGHT SIDES.
4- FILL REMOVED, TO BE SLOPED AROUND OUTSIDE PERIMETER.

NONCOMPLIANCE VOIDS WARRANTY

5- ALL BARTOP PANELS AVAILABLE IN 42" TO 48" PANEL HEIGHTS.

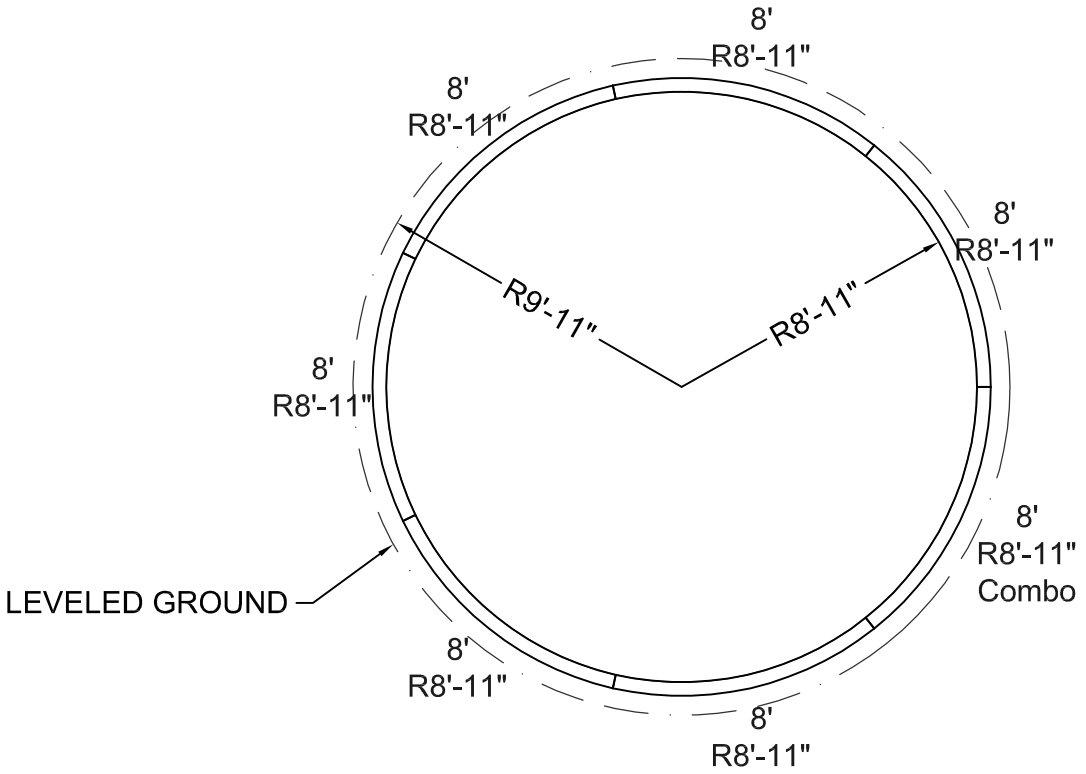

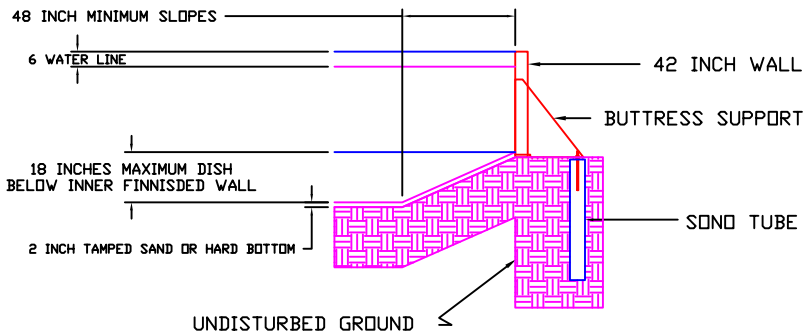

DESCRIPTION	QTY
8'x8'-11" RAD	6
8'x8'-11" RAD CBO	1
STD HARDWARE PACK	1

ONGROUND BARTOP POOLS

KIT REF# MNB1710-RD-42

MEGNA POOLS
Megna Plastic Packaging Corp.

SIZE: 17'-10" x 17'-10"		SHAPE: ROUND			HAND: N/A	DWG# 18 FT B	
PER.:	56'	S.A.:	249.55 ft²	VOL.: 0.00 gal.us	DATE: 28/01/2010		APPROVED:
PER.:	17.07 m	S.A.:	23.18 m²	VOL.: 0.00 liters	DRAWN BY: BCC		

STAKE OUT

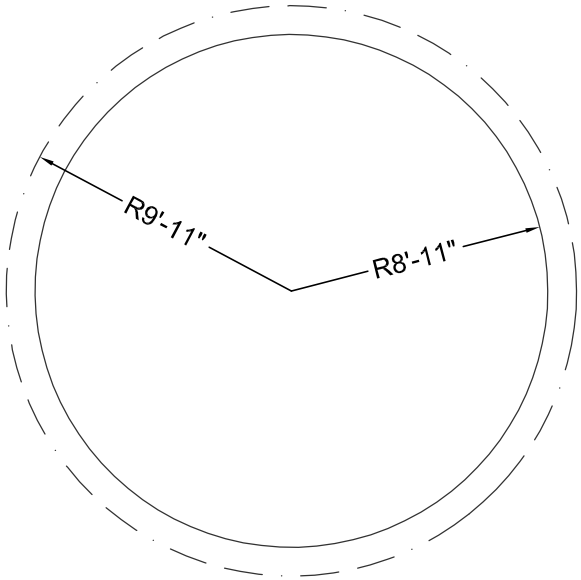

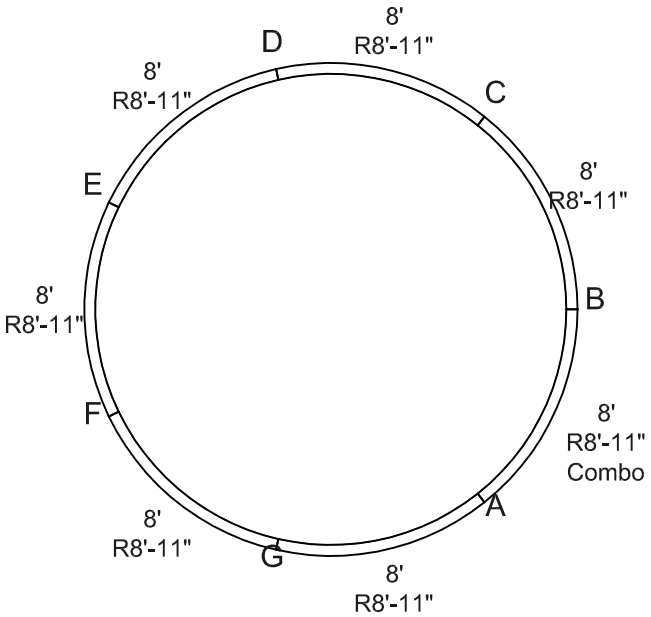

STEEL CHECK

KIT REF# MNB1710-RD-42

MEGNA POOLS
Megna Plastic Packaging Corp.

SIZE:	SHAPE:	HAND:	DWG#
20'-1" x 20'-1"	ROUND	N/A	20 FT A

PER.:	63'	S.A.:	315.84 ft²	VOL.:	0.00 gal.us
PER.:	19.20 m	S.A.:	29.34 m²	VOL.:	0.00 liters

DATE: 28/01/2010 | APPROVED:
DRAWN BY: BCC

ALL DIMENSIONS ARE FINISHED

MANUFACTURING NOTICE

1- DUE TO UNCERTAIN GROUND VARIANCES POOL WALLS MUST BE INSTALLED A MINIMUM OF 6 INCHES BELOW GRADE
2- BUTTRESS SUPPORTS MUST BE FULLY SUPPORTED INCLUDING SONO TUBES BELOW FROST LEVEL. (4 FEET)
3- 12 INCH CONCRETE COLLAR MINIMUM 24 INCHES PAST STRAIGHT SIDES.
4- FILL REMOVED, TO BE SLOPED AROUND OUTSIDE PERIMETER.

NONCOMPLIANCE VOIDS WARRANTY

5- ALL BARTOP PANELS AVAILABLE IN 42" TO 48" PANEL HEIGHTS.

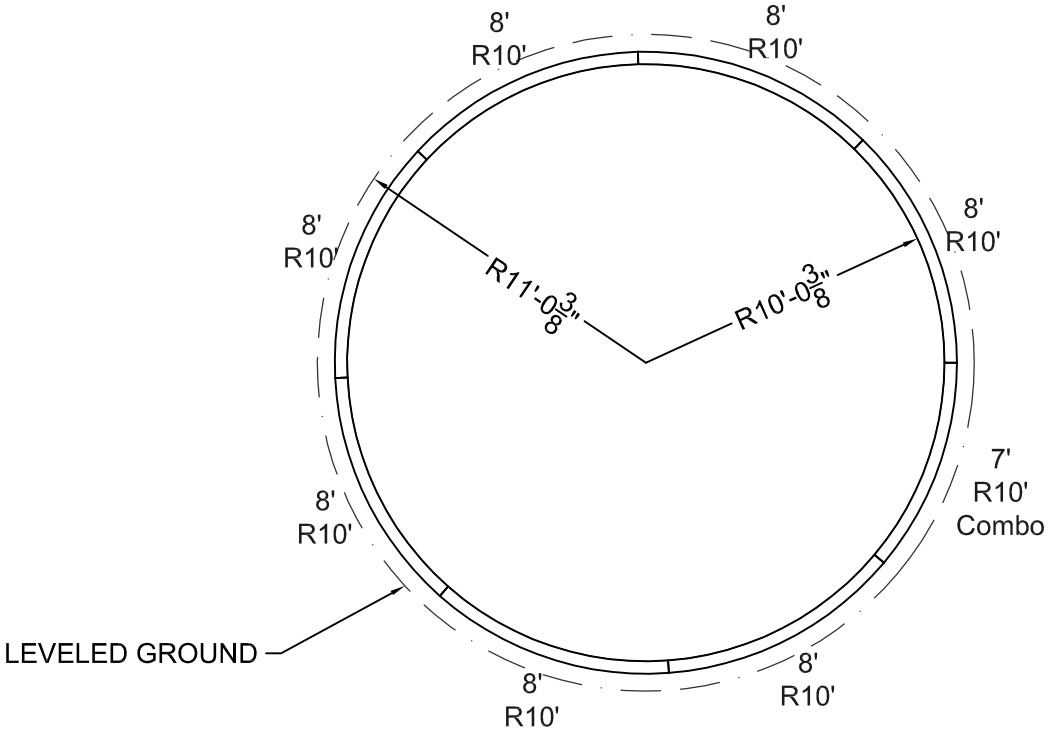

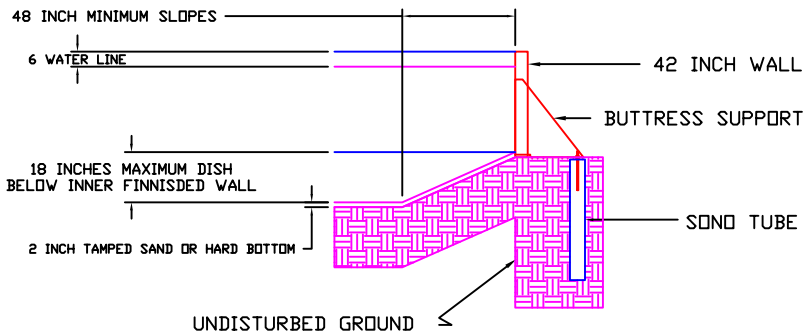

DESCRIPTION	QTY
7'x10'-0" RAD CBO	1
8'x10'-0" RAD	7
STD HARDWARE PACK	1

ONGROUND BARTOP POOLS

KIT REF# MNB2000-RD-42

MEGNA POOLS
Megna Plastic Packaging Corp.

SIZE:	SHAPE:	HAND:	DWG#
20'-1" x 20'-1"	ROUND	N/A	20 FT B

PER.:	63'	S.A.:	315.84 ft²	VOL.:	0.00 gal.us	DATE: 28/01/2010
PER.:	19.20 m	S.A.:	29.34 m²	VOL.:	0.00 liters	DRAWN BY: BCC

APPROVED:

STAKE OUT

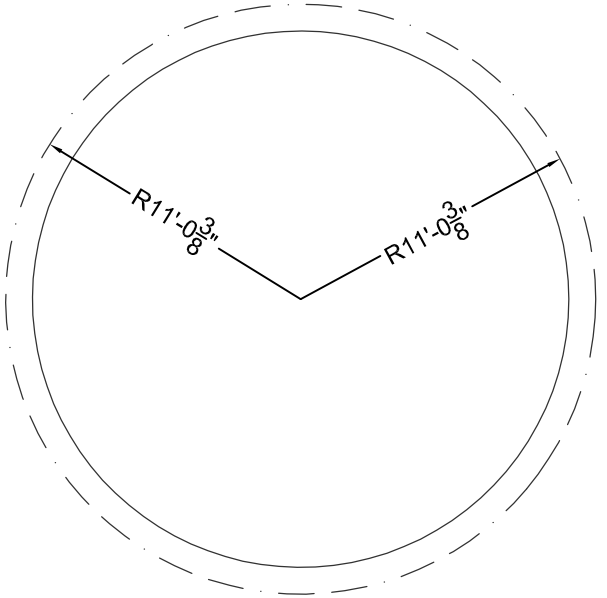

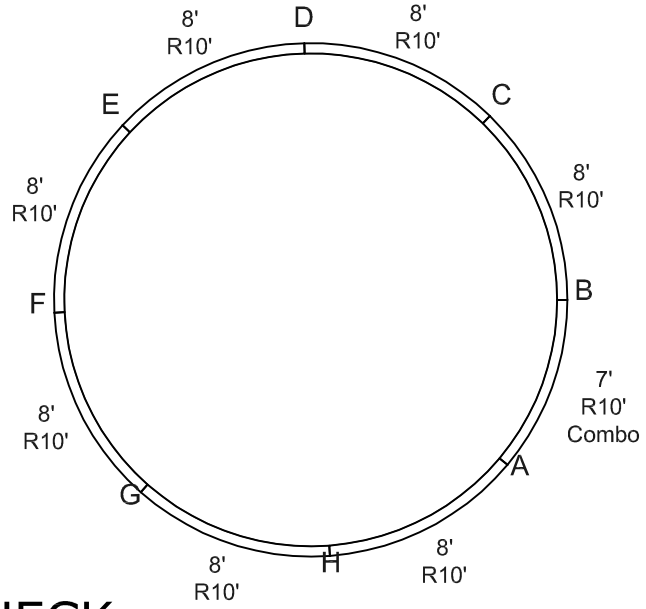

STEEL CHECK

KIT REF# MNB2000-RD-42

MEGNA POOLS
Megna Plastic Packaging Corp.

SIZE:	SHAPE:	HAND:	DWG#
20'-4" x 20'-4"	ROUND	N/A	21 FT A

PER.:	64'	S.A.:	325.95 ft²	VOL.:	0.00 gal.us
PER.:	19.51 m	S.A.:	30.28 m²	VOL.:	0.00 liters

DATE: 28/01/2010 | APPROVED:
DRAWN BY: BCC

ALL DIMENSIONS ARE FINISHED

MANUFACTURING NOTICE

1- DUE TO UNCERTAIN GROUND VARIANCES POOL WALLS MUST BE INSTALLED A MINIMUM OF 6 INCHES BELOW GRADE
2- BUTTRESS SUPPORTS MUST BE FULLY SUPPORTED INCLUDING SONO TUBES BELOW FROST LEVEL. (4 FEET)
3- 12 INCH CONCRETE COLLAR MINIMUM 24 INCHES PAST STRAIGHT SIDES.
4- FILL REMOVED, TO BE SLOPED AROUND OUTSIDE PERIMETER.

NONCOMPLIANCE VOIDS WARRANTY

5- ALL BARTOP PANELS AVAILABLE IN 42" TO 48" PANEL HEIGHTS.

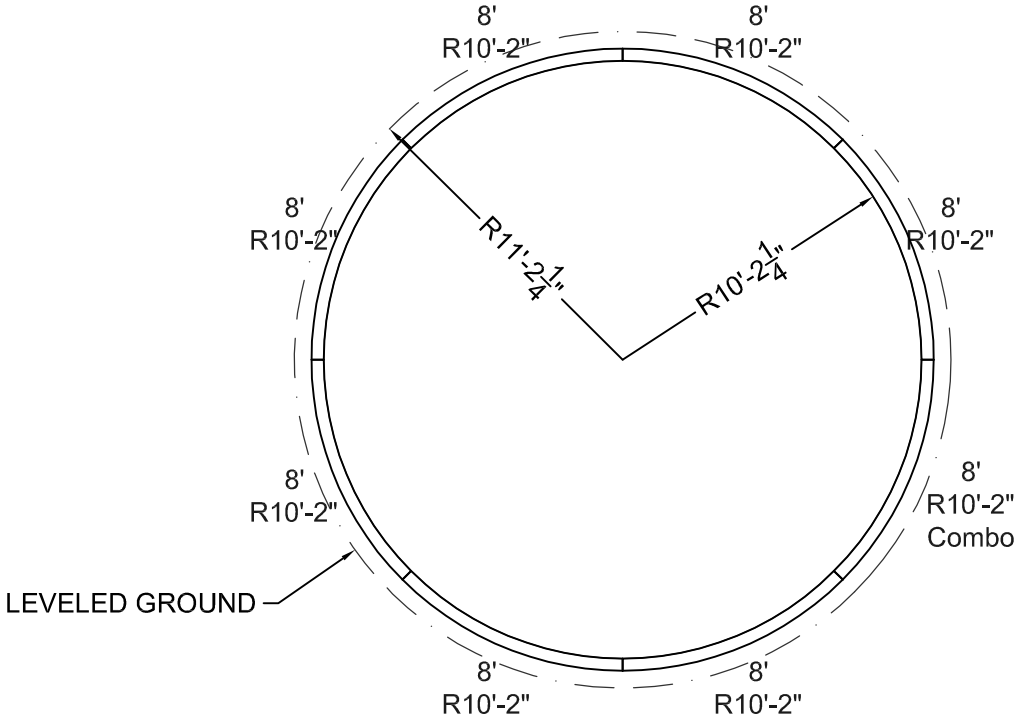

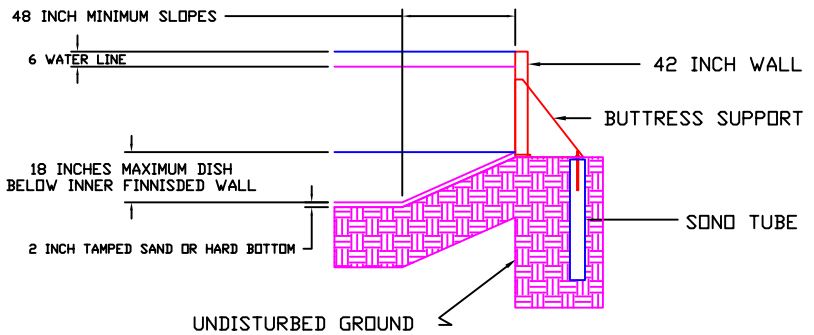

DESCRIPTION	QTY
8'x10'-2" RAD	7
8'x10'-2" RAD CBO	1
STD HARDWARE PACK	1

ONGROUND BARTOP POOLS

KIT REF# MNB2004-RD-42

MEGNA POOLS

Megna Plastic Packaging Corp.

SIZE:	SHAPE:	HAND:	DWG#
20'-4" x 20'-4"	ROUND	N/A	21 FT B

PER.:	64'	S.A.:	325.95 ft²	VOL.:	0.00 gal.us
PER.:	19.51 m	S.A.:	30.28 m²	VOL.:	0.00 liters

DATE: 28/01/2010

DRAWN BY: BCC

APPROVED:

STAKE OUT

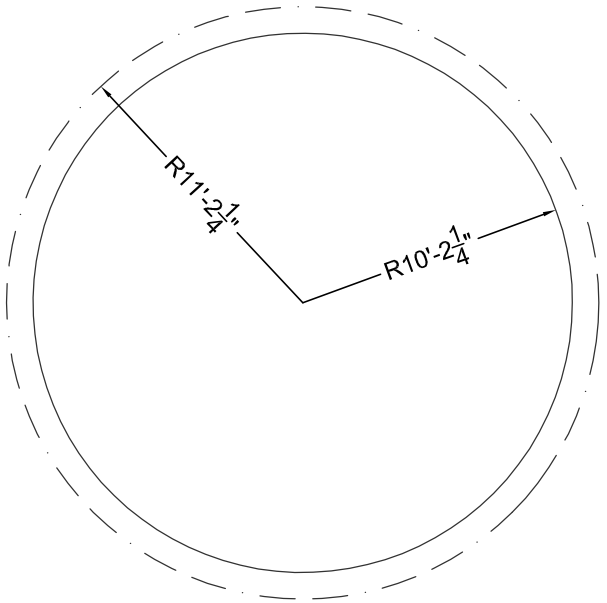

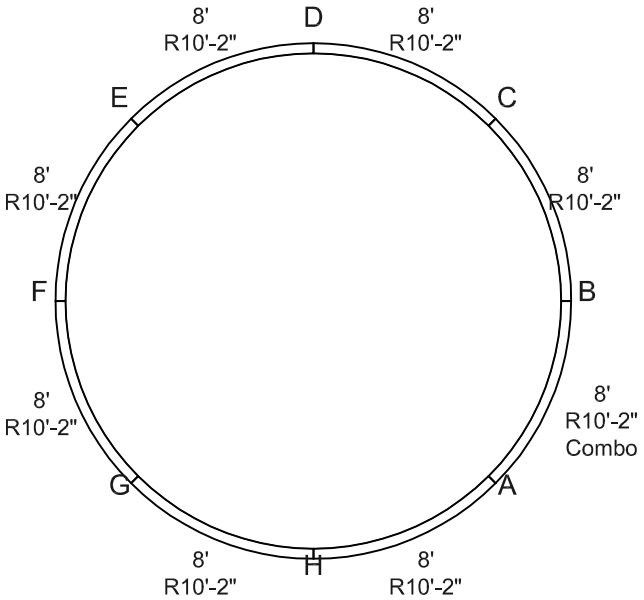

STEEL CHECK

KIT REF# MNB2004-RD-42

MEGNA POOLS
Megna Plastic Packaging Corp.

SIZE:	SHAPE:	HAND:	DWG#
22'-11" x 22'-11"	ROUND	N/A	23 FT A

PER.: 72'	S.A.: 412.53 ft²	VOL.: 0.00 gal.us	DATE: 03/03/2010	APPROVED:
PER.: 21.95 m	S.A.: 38.33 m²	VOL.: 0.00 liters	DRAWN BY: BCC	

ALL DIMENSIONS ARE FINISHED

MANUFACTURING NOTICE

1- DUE TO UNCERTAIN GROUND VARIANCES POOL WALLS MUST BE INSTALLED A MINIMUM OF 6 INCHES BELOW GRADE
2- BUTTRESS SUPPORTS MUST BE FULLY SUPPORTED INCLUDING SONO TUBES BELOW FROST LEVEL. (4 FEET)
3- 12 INCH CONCRETE COLLAR MINIMUM 24 INCHES PAST STRAIGHT SIDES.
4- FILL REMOVED, TO BE SLOPED AROUND OUTSIDE PERIMETER.

NONCOMPLIANCE VOIDS WARRANTY

5- ALL BARTOP PANELS AVAILABLE IN 42" TO 48" PANEL HEIGHTS.

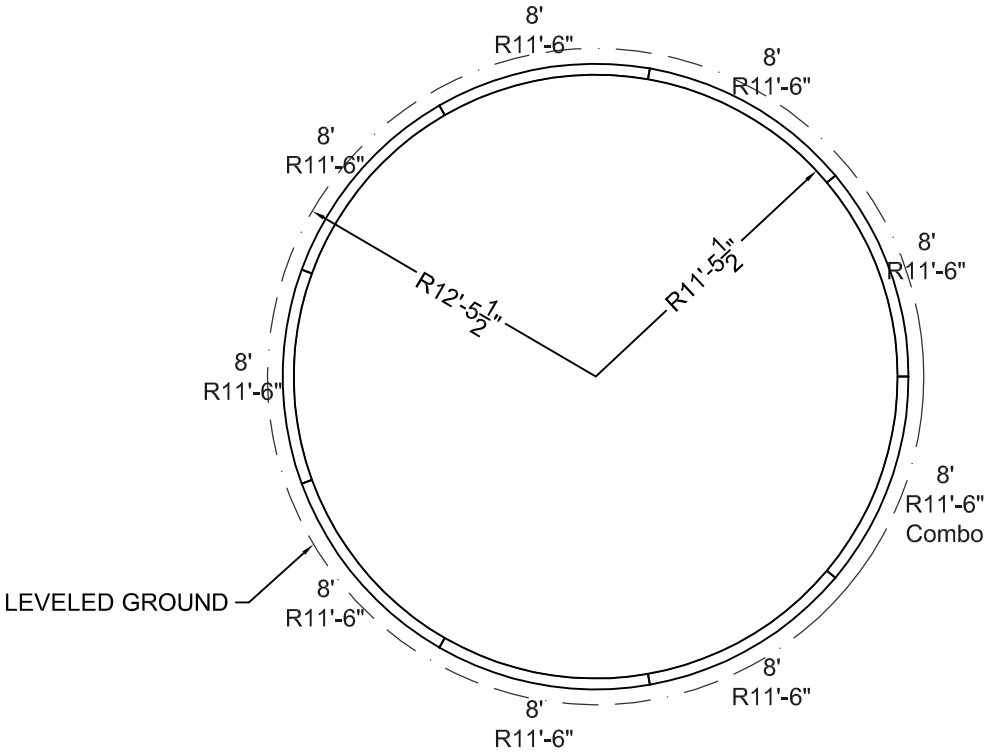

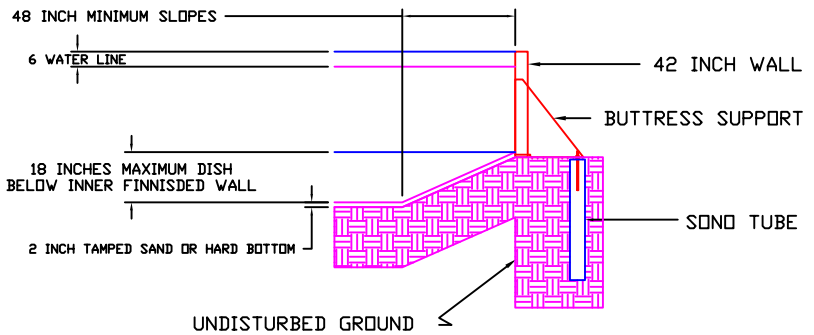

DESCRIPTION	QTY
8'x11'-6" RAD	8
8'x11'-6" RAD CBO	1
STD HARDWARE PACK	1

ONGROUND BARTOP POOLS

KIT REF# MNB2211-RD-42

MEGNA POOLS
Megna Plastic Packaging Corp.

SIZE: 22'-11" x 22'-11"		SHAPE: ROUND			HAND: N/A	DWG# 23 FT B	
PER.:	72'	S.A.:	412.53 ft²	VOL.: 0.00 gal.us	DATE: 03/03/2010		APPROVED:
PER.:	21.95 m	S.A.:	38.33 m²	VOL.: 0.00 liters	DRAWN BY: BCC		

STAKE OUT

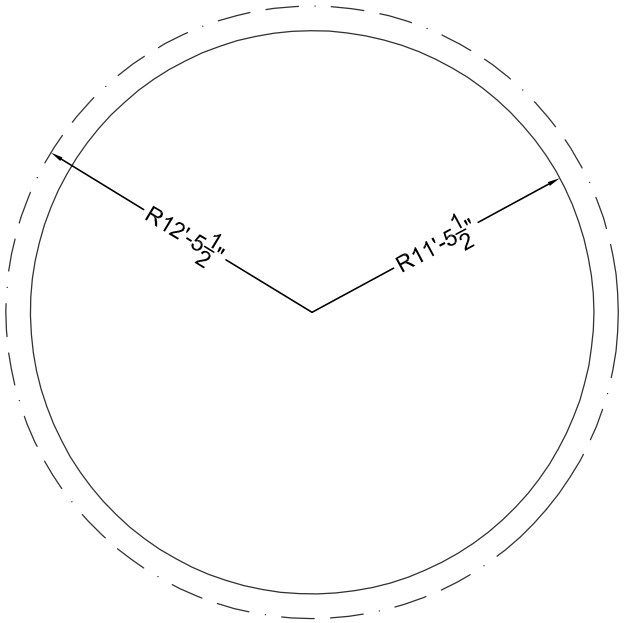

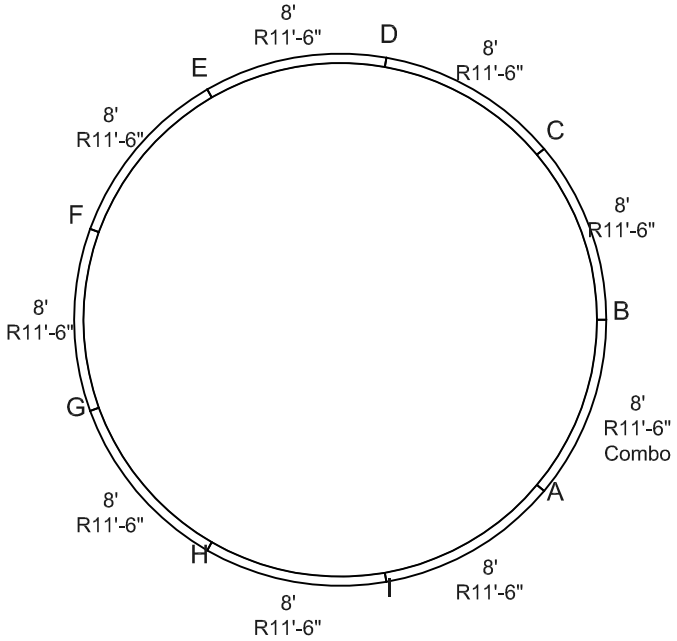

STEEL CHECK

KIT REF# MNB2211-RD-42

MEGNA POOLS
Megna Plastic Packaging Corp.

SIZE:	SHAPE:	HAND:	DWG#
24' x 24'	ROUND	N/A	24 FT A

PER.:	75'-5"	S.A.:	452.39 ft²	VOL.:	0.00 gal.us
PER.:	22.98 m	S.A.:	42.03 m²	VOL.:	0.00 liters

DATE: 03/03/2010 | DRAWN BY: BCC | APPROVED:

ALL DIMENSIONS ARE FINISHED

MANUFACTURING NOTICE

1- DUE TO UNCERTAIN GROUND VARIANCES POOL WALLS MUST BE INSTALLED A MINIMUM OF 6 INCHES BELOW GRADE
2- BUTTRESS SUPPORTS MUST BE FULLY SUPPORTED INCLUDING SONO TUBES BELOW FROST LEVEL. (4 FEET)
3- 12 INCH CONCRETE COLLAR MINIMUM 24 INCHES PAST STRAIGHT SIDES.
4- FILL REMOVED, TO BE SLOPED AROUND OUTSIDE PERIMETER.

NONCOMPLIANCE VOIDS WARRANTY

5- ALL BARTOP PANELS AVAILABLE IN 42" TO 48" PANEL HEIGHTS.

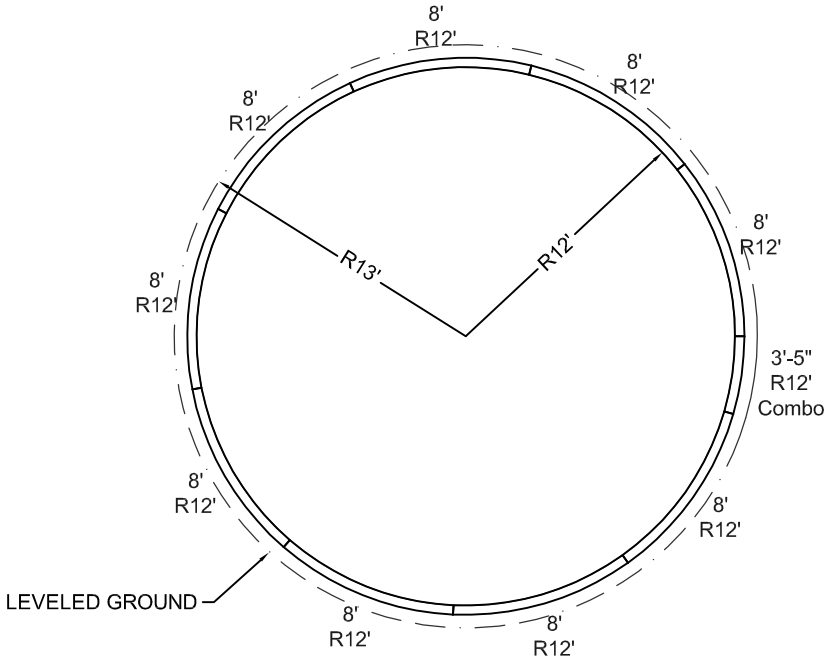

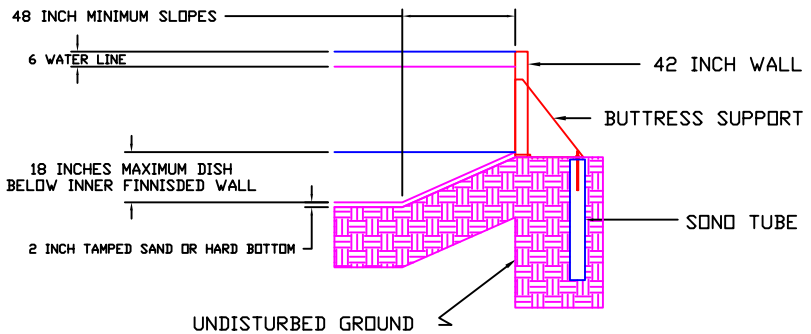

DESCRIPTION	QTY
3'-5"x12' RAD CBO	1
8'x12' RAD	9
STD HARDWARE PACK	1

ONGROUND BARTOP POOLS

KIT REF# MNB2400-RD-42

MEGNA POOLS

Megna Plastic Packaging Corp.

SIZE:	SHAPE:	HAND:	DWG#
24' x 24'	ROUND	N/A	24 FT B

PER.:	75'-5"	S.A.:	452.39 ft²	VOL.:	0.00 gal.us
PER.:	22.98 m	S.A.:	42.03 m²	VOL.:	0.00 liters

DATE: 03/03/2010

DRAWN BY: BCC

APPROVED:

STAKE OUT

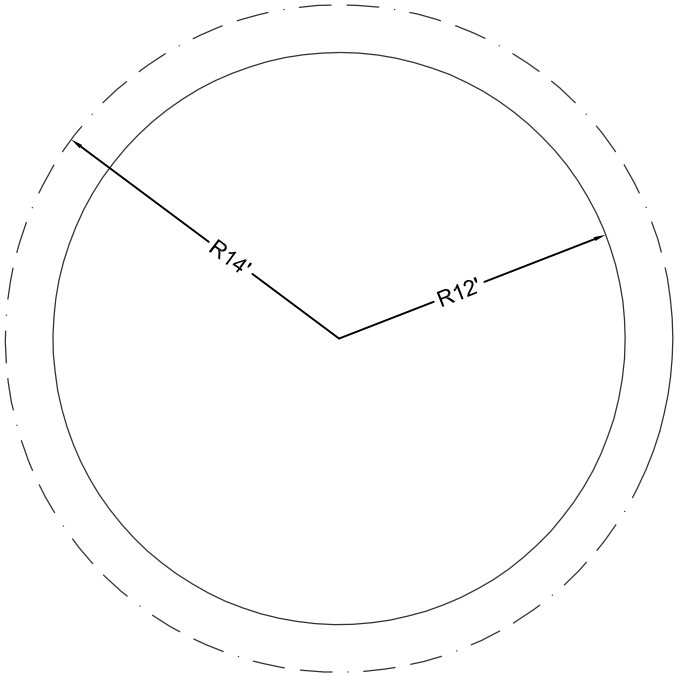

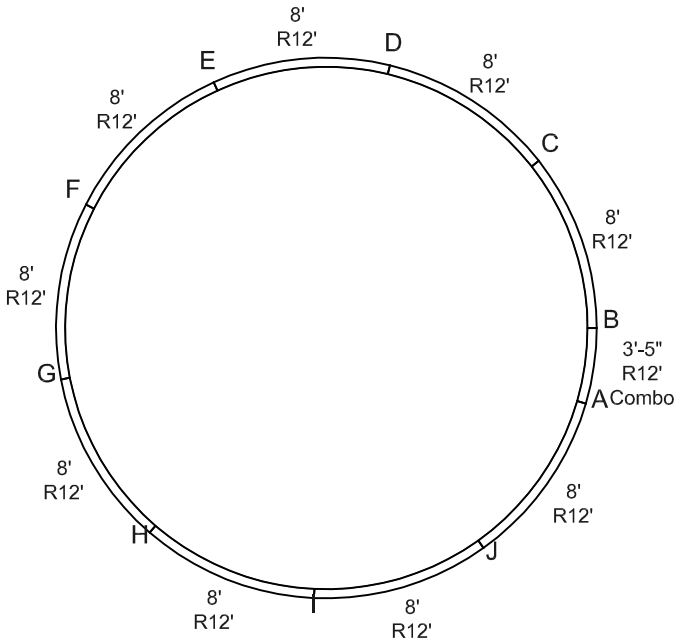

STEEL CHECK

KIT REF# MNB2400-RD-42

MEGNA POOLS
Megna Plastic Packaging Corp.

SIZE:	SHAPE:	HAND:	DWG#
25'-6" x 25'-6"	ROUND	N/A	26 FT A

PER.:	80'	S.A.:	509.30 ft²	VOL.:	0.00 gal.us
PER.:	24.38 m	S.A.:	47.32 m²	VOL.:	0.00 liters

DATE: 28/01/2010 | APPROVED:

DRAWN BY: BCC

ALL DIMENSIONS ARE FINISHED

MANUFACTURING NOTICE

1- DUE TO UNCERTAIN GROUND VARIANCES POOL WALLS MUST BE INSTALLED A MINIMUM OF 6 INCHES BELOW GRADE
2- BUTTRESS SUPPORTS MUST BE FULLY SUPPORTED INCLUDING SONO TUBES BELOW FROST LEVEL. (4 FEET)
3- 12 INCH CONCRETE COLLAR MINIMUM 24 INCHES PAST STRAIGHT SIDES.
4- FILL REMOVED, TO BE SLOPED AROUND OUTSIDE PERIMETER.

NONCOMPLIANCE VOIDS WARRANTY

5- ALL BARTOP PANELS AVAILABLE IN 42" TO 48" PANEL HEIGHTS.

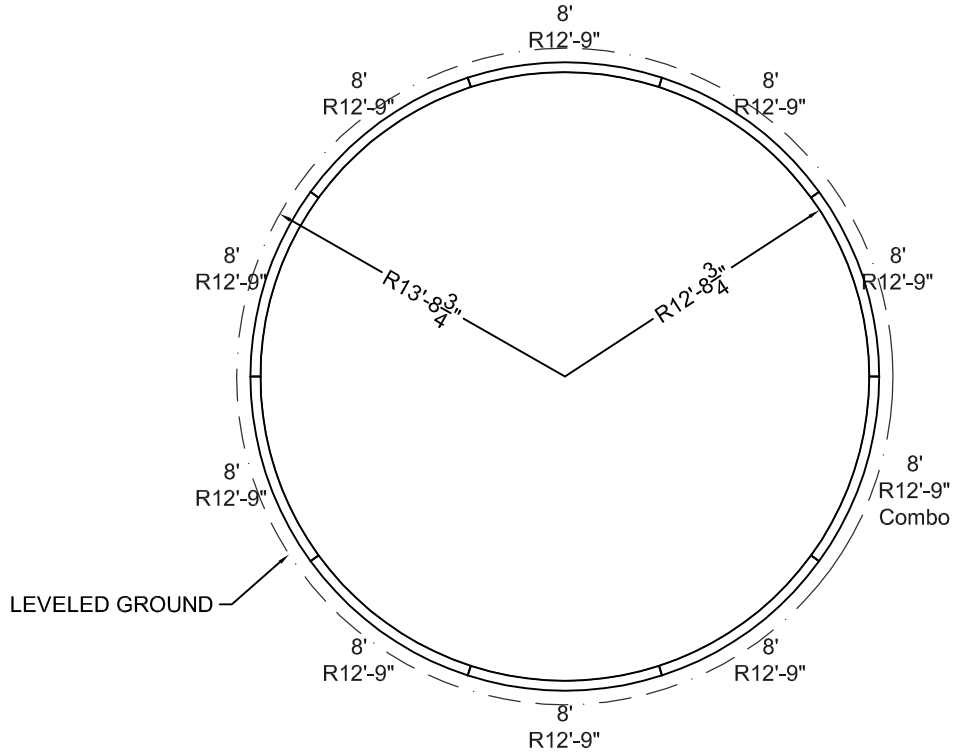

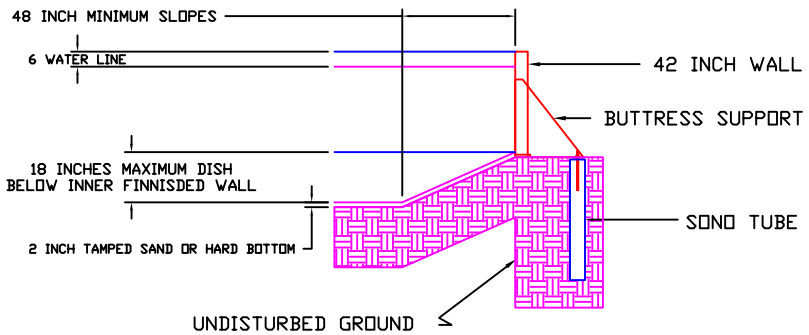

DESCRIPTION	QTY
8'x12'-9" RAD	9
8'x12'-9" RAD CBO	1
STD HARDWARE PACK	1

ONGROUND BARTOP POOLS

KIT REF# MNB2506-RD-42

MEGNA POOLS

Megna Plastic Packaging Corp.

SIZE: 25'-6" x 25'-6"		SHAPE: ROUND				HAND: N/A	DWG# 26 FT B
PER.:	80'	S.A.:	509.30 ft²	VOL.:	0.00 gal.us	DATE: 28/01/2010	APPROVED:
PER.:	24.38 m	S.A.:	47.32 m²	VOL.:	0.00 liters	DRAWN BY: BCC	

STAKE OUT

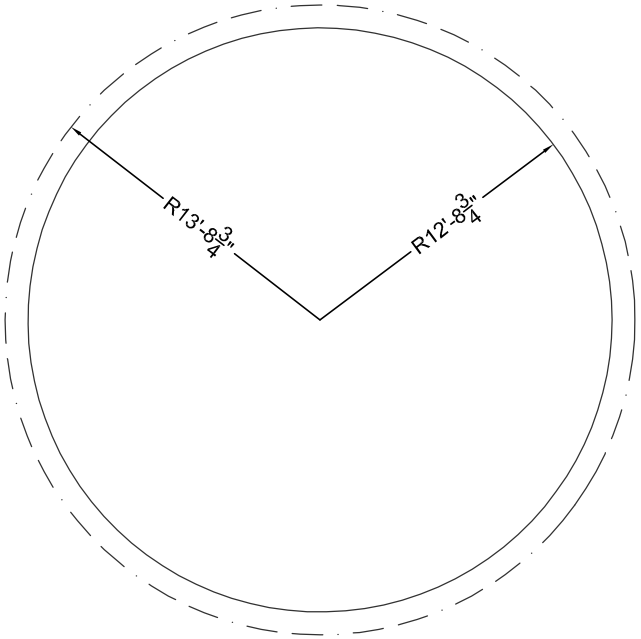

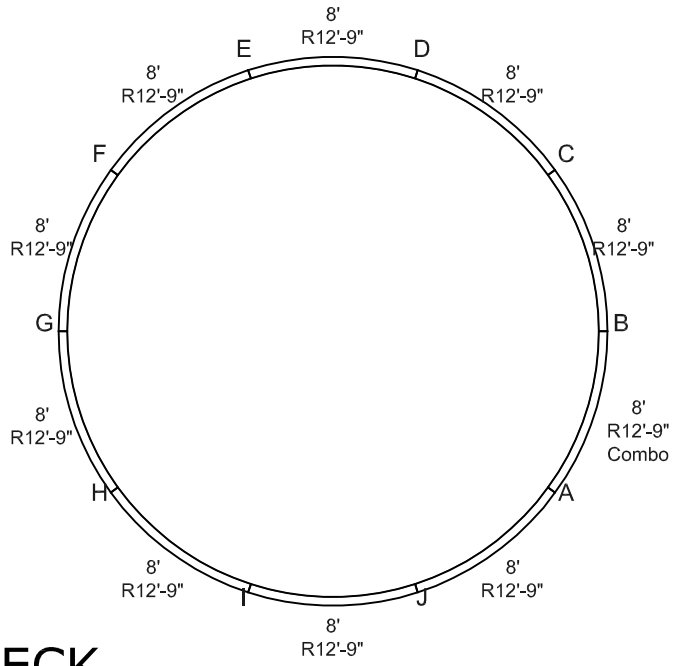

STEEL CHECK

KIT REF# MNB2506-RD-42

MEGNA POOLS
Megna Plastic Packaging Corp.

SIZE:	SHAPE:	HAND:	DWG#
28'-8" x 28'-8"	ROUND	N/A	29 FT A

PER.:	90'	S.A.:	644.58 ft²	VOL.:	0.00 gal.us
PER.:	27.43 m	S.A.:	59.88 m²	VOL.:	0.00 liters

DATE: 28/01/2010 | APPROVED:
DRAWN BY: BCC

ALL DIMENSIONS ARE FINISHED

MANUFACTURING NOTICE

1- DUE TO UNCERTAIN GROUND VARIANCES POOL WALLS MUST BE INSTALLED A MINIMUM OF 6 INCHES BELOW GRADE
2- BUTTRESS SUPPORTS MUST BE FULLY SUPPORTED INCLUDING SONO TUBES BELOW FROST LEVEL. (4 FEET)
3- 12 INCH CONCRETE COLLAR MINIMUM 24 INCHES PAST STRAIGHT SIDES.
4- FILL REMOVED, TO BE SLOPED AROUND OUTSIDE PERIMETER.

NONCOMPLIANCE VOIDS WARRANTY

5- ALL BARTOP PANELS AVAILABLE IN 42" TO 48" PANEL HEIGHTS.

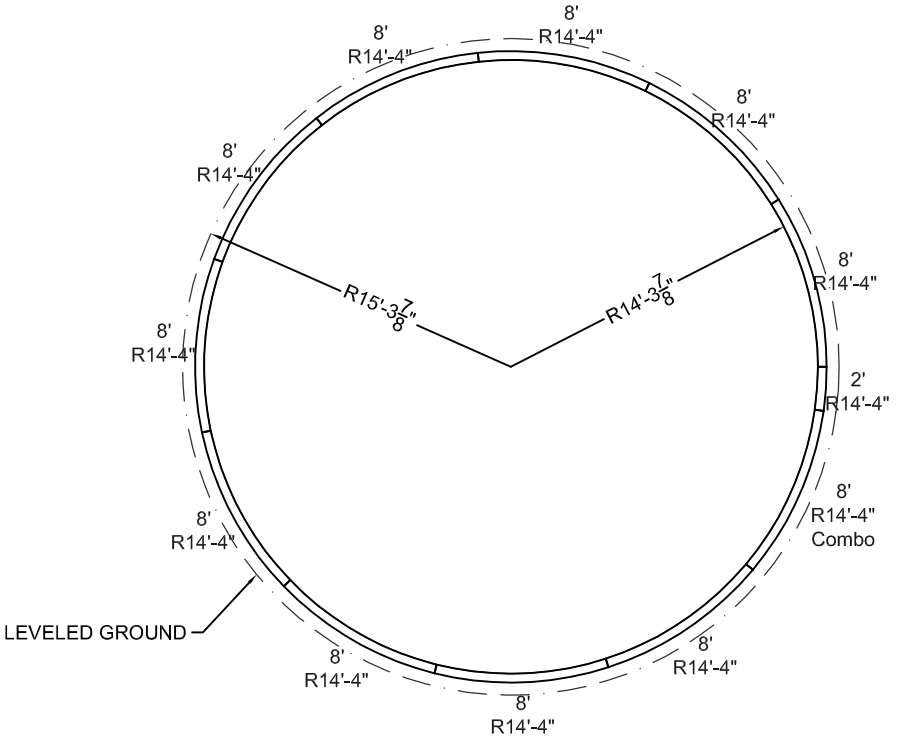

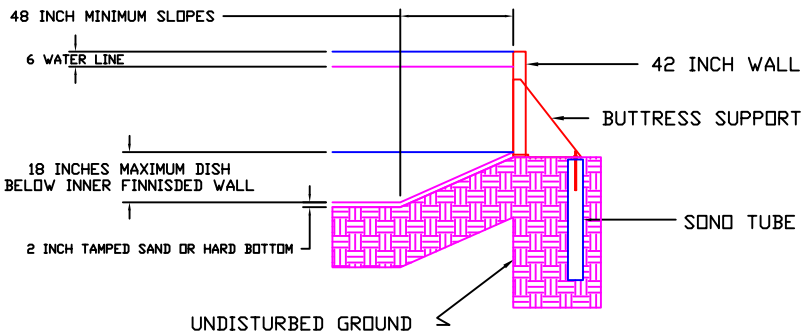

DESCRIPTION	QTY
2'x14'-4" RAD	1
8'x14'-4" RAD	10
8'x14'-4" RAD CBO	1
STD HARDWARE PACK	1

ONGROUND BARTOP POOLS

KIT REF# MNB2808-RD-42

MEGNA POOLS

Megna Plastic Packaging Corp.

SIZE:	SHAPE:	HAND:	DWG#
28'-8" x 28'-8"	ROUND	N/A	29 FT B

PER.:	90'	S.A.:	644.58 ft²	VOL.:	0.00 gal.us
PER.:	27.43 m	S.A.:	59.88 m²	VOL.:	0.00 liters

DATE: 28/01/2010

DRAWN BY: BCC

APPROVED:

STAKE OUT

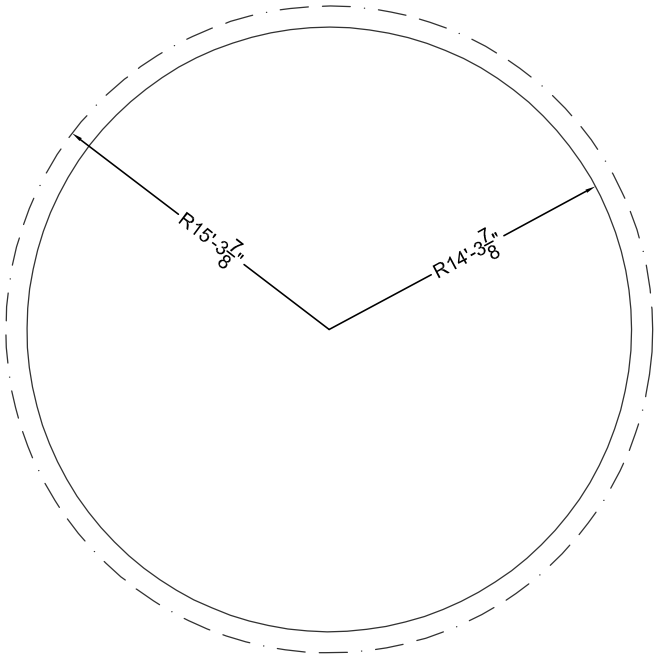

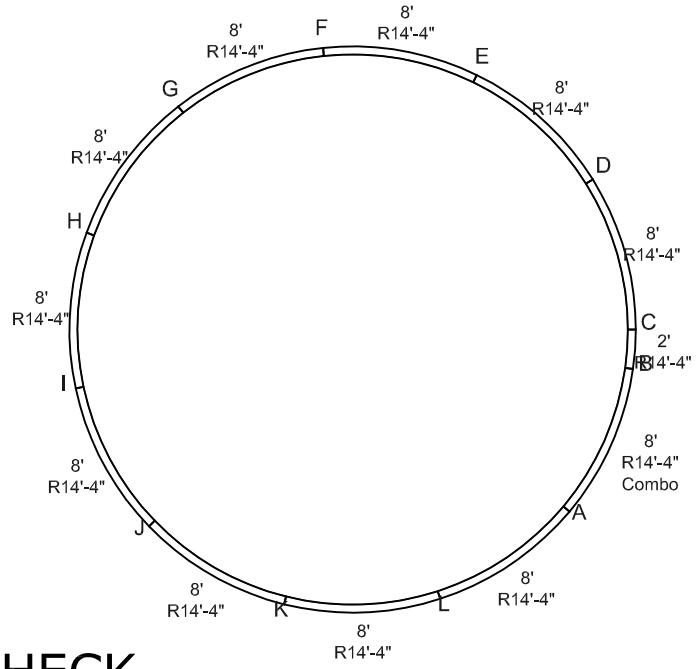

STEEL CHECK

KIT REF# MNB2808-RD-42

MEGNA POOLS
Megna Plastic Packaging Corp.

SIZE:	SHAPE:	HAND:	DWG#
32' x 32'	ROUND	N/A	32 FT A

PER.: 100'-6"	S.A.: 803.75 ft²	VOL.: 0.00 gal.us	DATE: 28/01/2010	APPROVED:
PER.: 30.63 m	S.A.: 74.67 m²	VOL.: 0.00 liters	DRAWN BY: BCC	

ALL DIMENSIONS ARE FINISHED

MANUFACTURING NOTICE

1- DUE TO UNCERTAIN GROUND VARIANCES POOL WALLS MUST BE INSTALLED A MINIMUM OF 6 INCHES BELOW GRADE
2- BUTTRESS SUPPORTS MUST BE FULLY SUPPORTED INCLUDING SONO TUBES BELOW FROST LEVEL. (4 FEET)
3- 12 INCH CONCRETE COLLAR MINIMUM 24 INCHES PAST STRAIGHT SIDES.
4- FILL REMOVED, TO BE SLOPED AROUND OUTSIDE PERIMETER.

NONCOMPLIANCE VOIDS WARRANTY

5- ALL BARTOP PANELS AVAILABLE IN 42" TO 48" PANEL HEIGHTS.

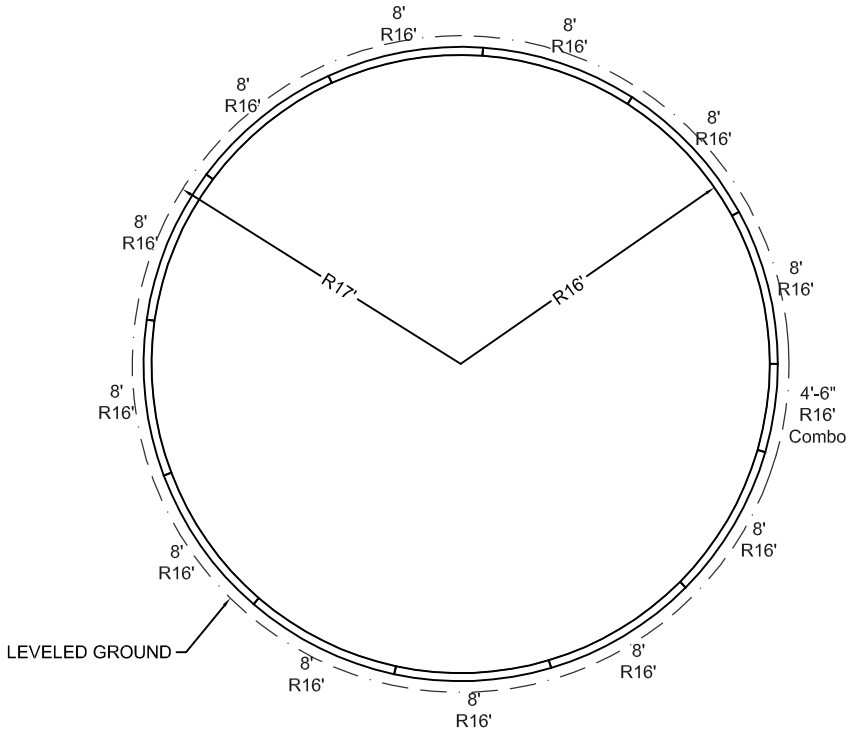

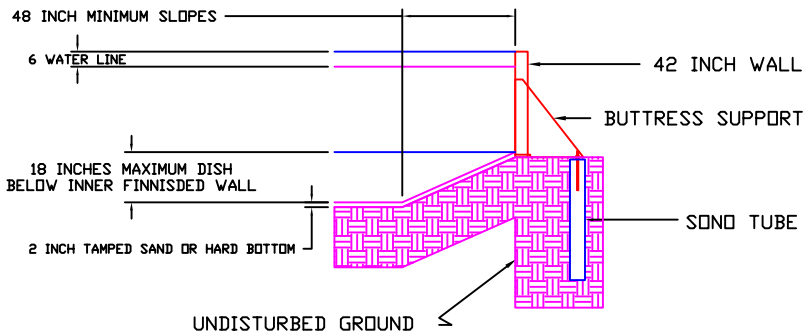

DESCRIPTION	QTY
4'-6"x16' RAD CBO	1
8'x16' RAD	12
STD HARDWARE PACK	1

ONGROUND BARTOP POOLS

KIT REF# MNB3200-RD-42

MEGNA POOLS

Megna Plastic Packaging Corp.

SIZE: 32' x 32'	SHAPE: ROUND		HAND: N/A	DWG# 32 FT B
PER.: 100'-6"	S.A.: 803.75 ft²	VOL.: 0.00 gal.us	DATE: 28/01/2010	APPROVED:
PER.: 30.63 m	S.A.: 74.67 m²	VOL.: 0.00 liters	DRAWN BY: BCC	

STAKE OUT

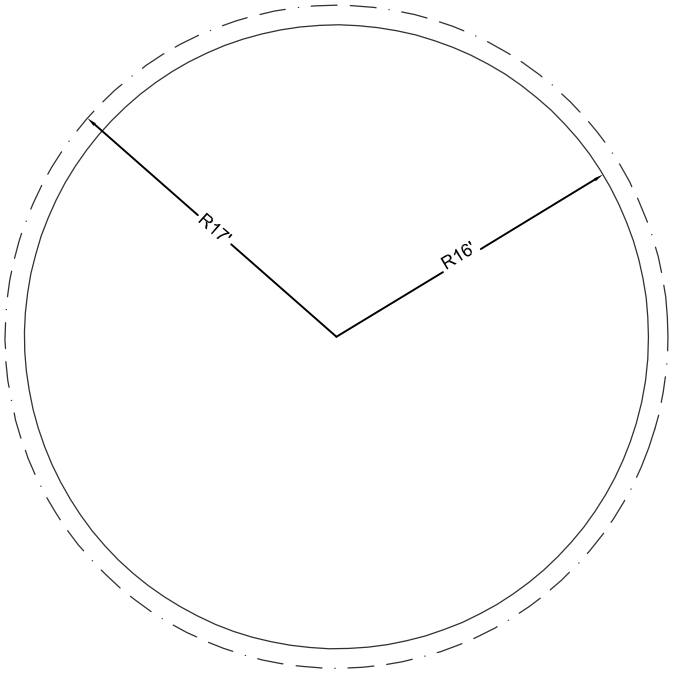

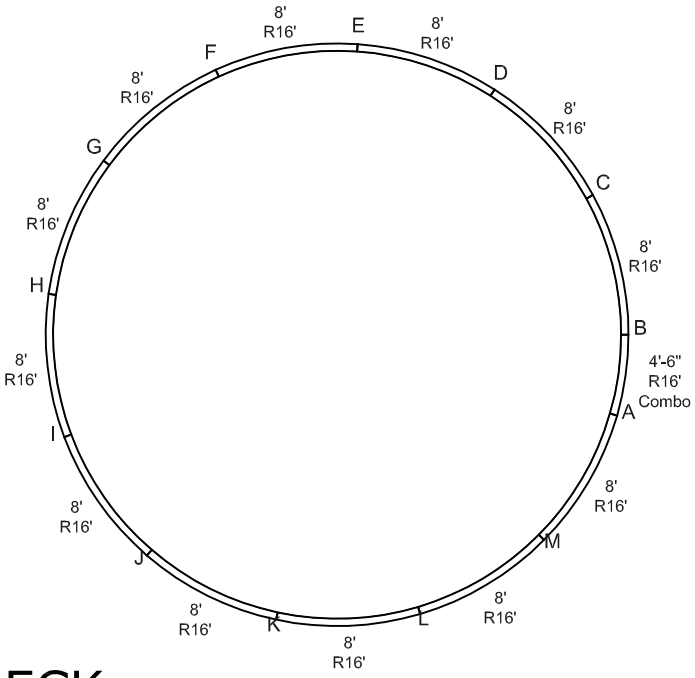

STEEL CHECK

KIT REF# MNB3200-RD-42

MEGNA POOLS
Megna Plastic Packaging Corp.

SIZE:	SHAPE:	HAND:	DWG#
35' x 35'	ROUND	N/A	35 FT A

PER.:	110'	S.A.:	962.89 ft²	VOL.:	0.00 gal.us
PER.:	33.53 m	S.A.:	89.46 m²	VOL.:	0.00 liters

DATE: 29/01/2010 | APPROVED:

DRAWN BY: BCC

ALL DIMENSIONS ARE FINISHED

MANUFACTURING NOTICE

1- DUE TO UNCERTAIN GROUND VARIANCES POOL WALLS MUST BE INSTALLED A MINIMUM OF 6 INCHES BELOW GRADE
2- BUTTRESS SUPPORTS MUST BE FULLY SUPPORTED INCLUDING SONO TUBES BELOW FROST LEVEL. (4 FEET)
3- 12 INCH CONCRETE COLLAR MINIMUM 24 INCHES PAST STRAIGHT SIDES.
4- FILL REMOVED, TO BE SLOPED AROUND OUTSIDE PERIMETER.

NONCOMPLIANCE VOIDS WARRANTY

5- ALL BARTOP PANELS AVAILABLE IN 42" TO 48" PANEL HEIGHTS.

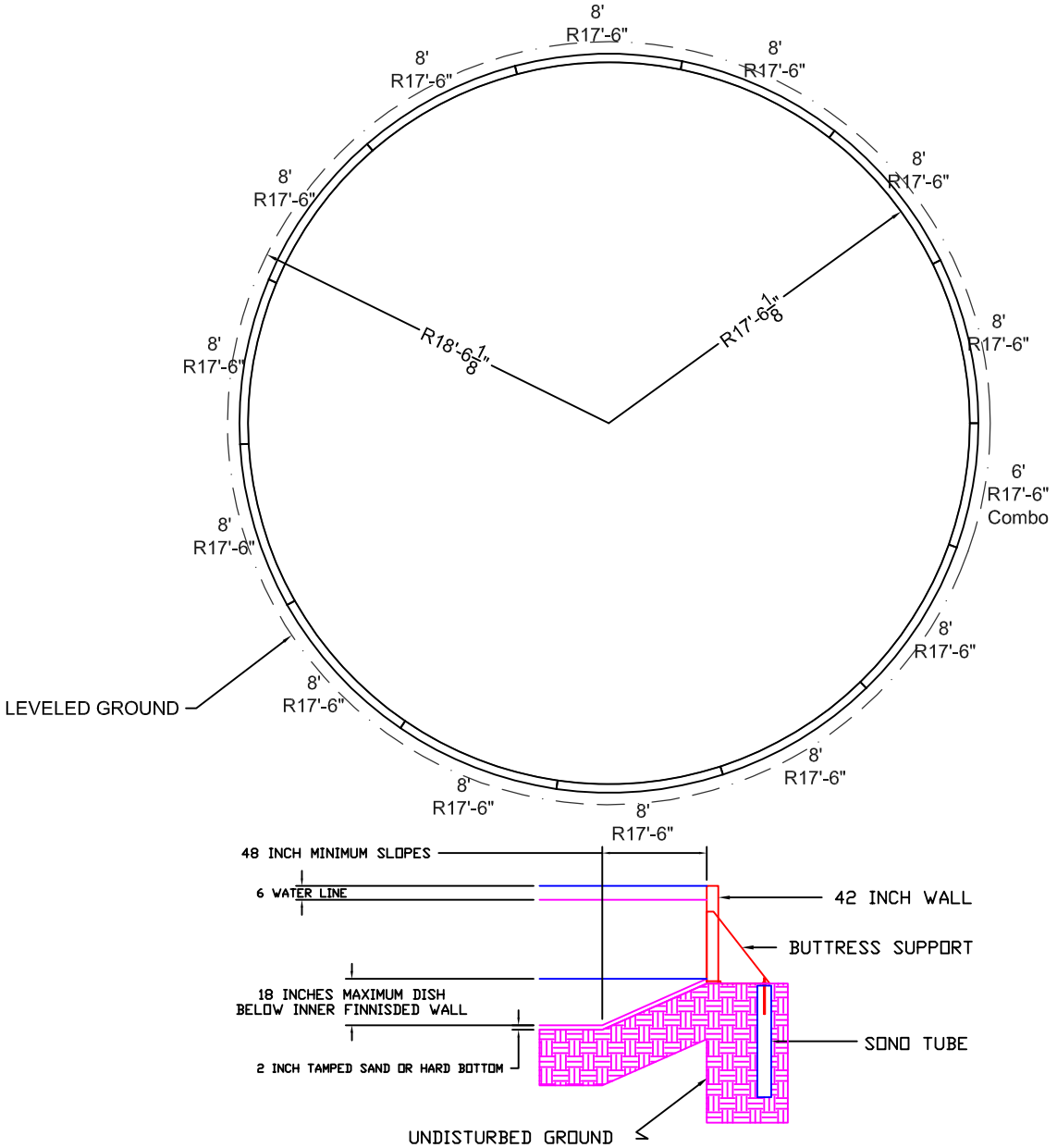

DESCRIPTION	QTY
6'x17'-6" RAD CBO	1
8'x17'-6" RAD	13
STD HARDWARE PACK	1

ONGROUND BARTOP POOLS

KIT REF# MNB3500-RD-42

MEGNA POOLS

Megna Plastic Packaging Corp.

SIZE: 35' x 35'		SHAPE: ROUND				HAND: N/A	DWG# 35 FT B
PER.:	110'	S.A.:	962.89 ft²	VOL.:	0.00 gal.us	DATE: 29/01/2010	APPROVED:
PER.:	33.53 m	S.A.:	89.46 m²	VOL.:	0.00 liters	DRAWN BY: BCC	

STAKE OUT

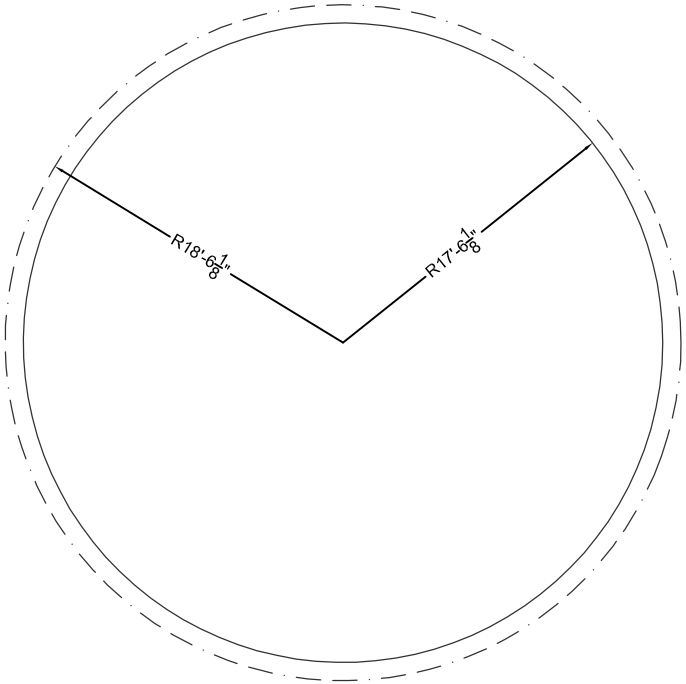

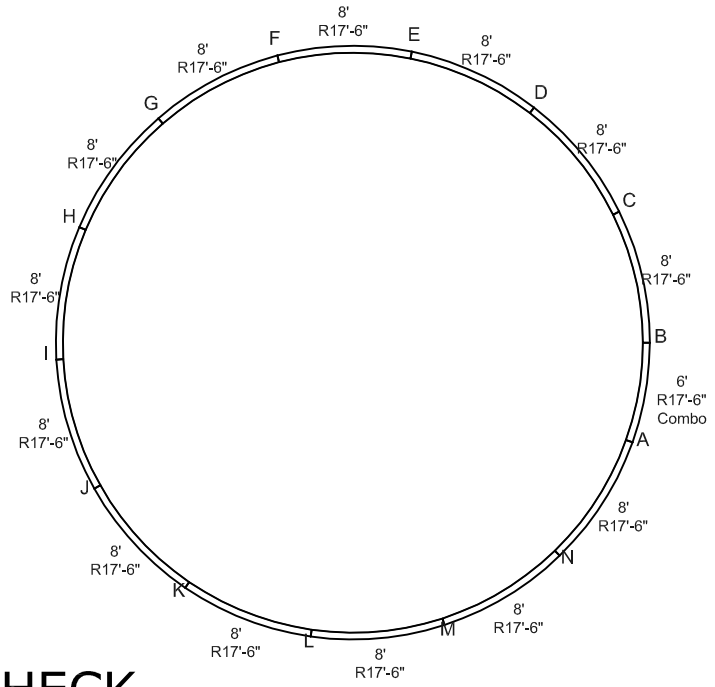

STEEL CHECK

KIT REF# MNB3500-RD-42

MEGNA POOLS
Megna Plastic Packaging Corp.

SIZE:	SHAPE:	HAND:	DWG#
25'-11" x 24'-7"	DECAGON	N/A	26FT A

PER.:	80'	S.A.:	492.43 ft²	VOL.:	0.00 gal.us
PER.:	24.38 m	S.A.:	45.75 m²	VOL.:	0.00 liters

DATE: 22/11/2010 | APPROVED:

DRAWN BY: NM

ALL DIMENSIONS ARE FINISHED

MANUFACTURING NOTICE

1- DUE TO UNCERTAIN GROUND VARIANCES POOL WALLS MUST BE INSTALLED A MINIMUM OF 6 INCHES BELOW GRADE
2- BUTTRESS SUPPORTS MUST BE FULLY SUPPORTED INCLUDING SONO TUBES BELOW FROST LEVEL. (4 FEET)
3- 12 INCH CONCRETE COLLAR MINIMUM 24 INCHES PAST STRAIGHT SIDES.
4- FILL REMOVED, TO BE SLOPED AROUND OUTSIDE PERIMETER.

NONCOMPLIANCE VOIDS WARRANTY

5- ALL TOP RAIL POOLS AVAILABLE IN
42" WITH 5" TOP RAIL AND
48" WITH 3" TOP RAIL.

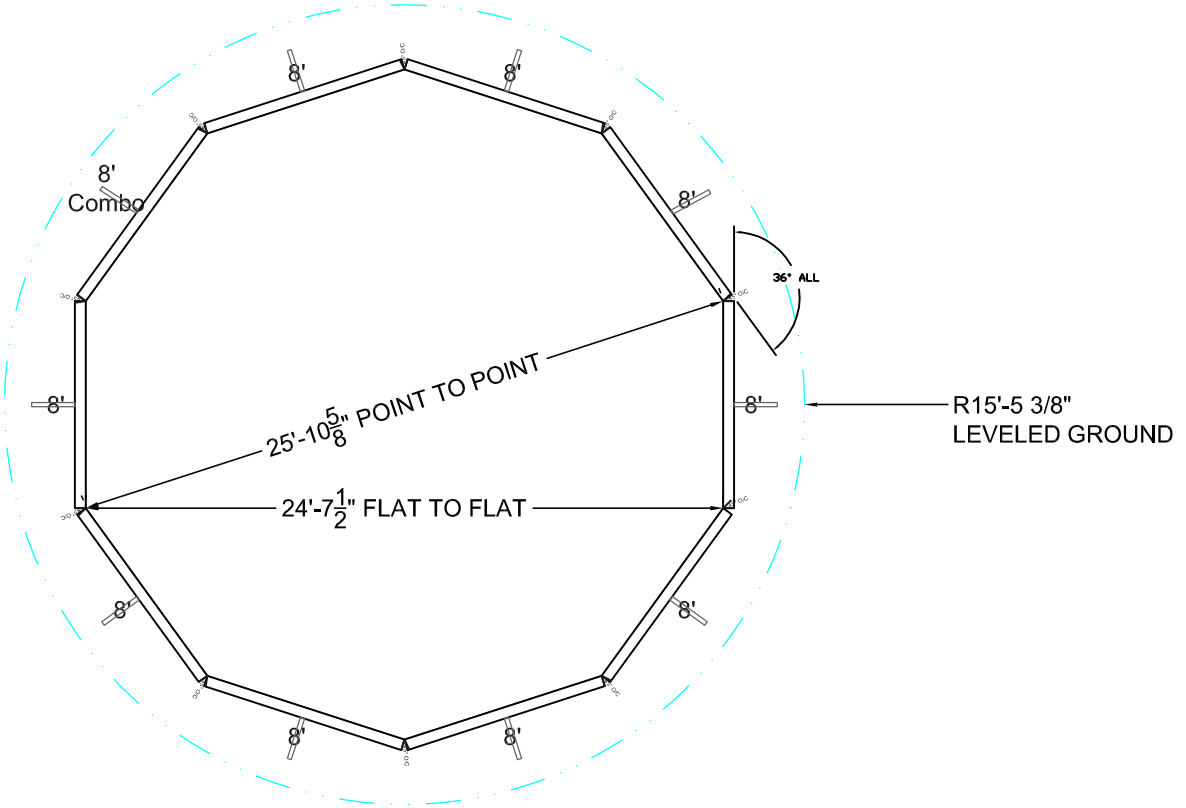

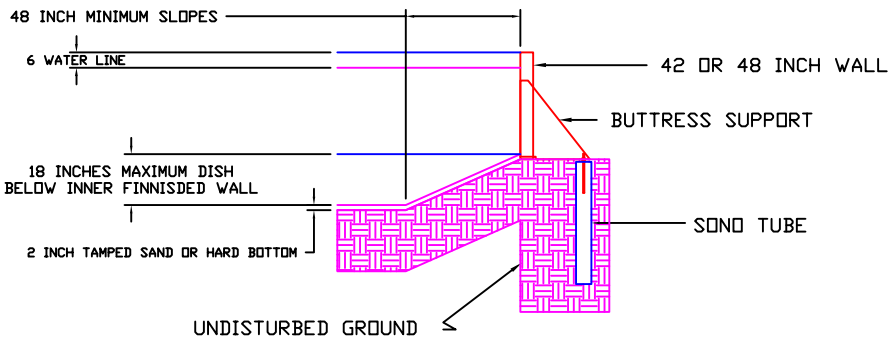

DESCRIPTION	QTY
8' STR	9
8' STR COMBO	1
36° O/C	10
BUTTRESS SUPPORTS	10
STD HARDWARE PACK	1

ONGROUND TOP RAIL POOLS

KIT REF# MNT2626-DE-42

MEGNA POOLS
Megna Plastic Packaging Corp.

SIZE: 25'-11" x 24'-7"		SHAPE: DECAGON			HAND: N/A	DWG# 26FT B	
PER.:	80'	S.A.:	492.43 ft²	VOL.: 0.00 gal.us	DATE: 22/11/2010	APPROVED:	
PER.:	24.38 m	S.A.:	45.75 m²	VOL.: 0.00 liters	DRAWN BY: NM		

STAKE OUT

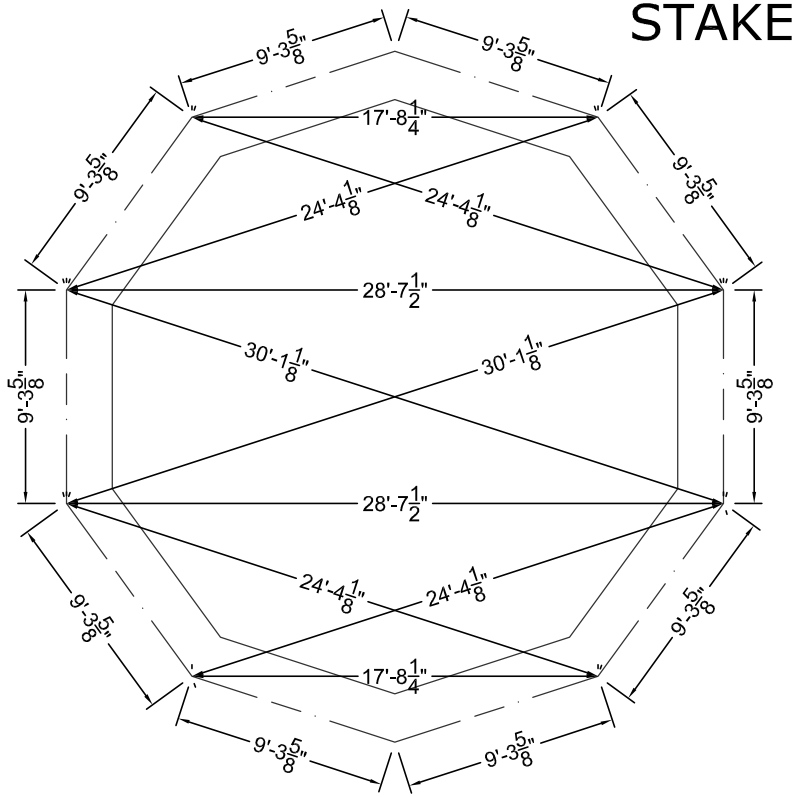

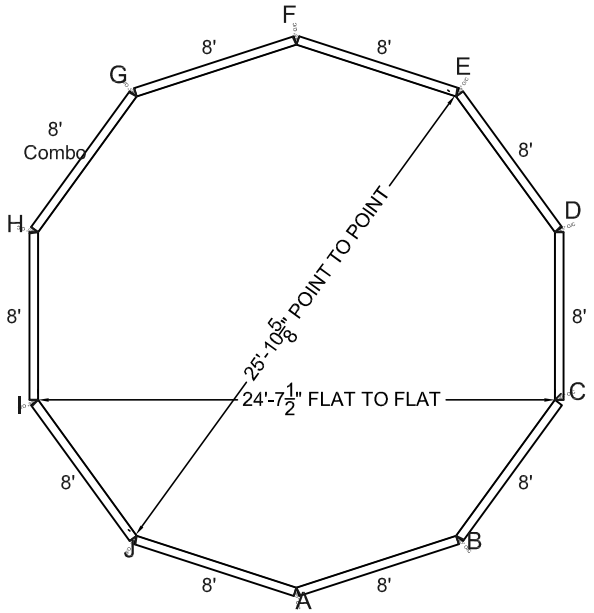

STEEL CHECK

KIT REF# MNT2626-DE-42

MEGNA POOLS
Megna Plastic Packaging Corp.

SIZE:	SHAPE:	HAND:	DWG#	
12'-1" x 23'-1"	GRECIAN	N/A	12X23	A

PER.:	62'	S.A.:	253.49 ft²	VOL.:	0.00 gal.us	DATE: 22/11/2010
PER.:	18.90 m	S.A.:	23.55 m²	VOL.:	0.00 liters	DRAWN BY: NM

APPROVED:

ALL DIMENSIONS ARE FINISHED

MANUFACTURING NOTICE

1- DUE TO UNCERTAIN GROUND VARIANCES POOL WALLS MUST BE INSTALLED A MINIMUM OF 6 INCHES BELOW GRADE
2- BUTTRESS SUPPORTS MUST BE FULLY SUPPORTED INCLUDING SONO TUBES BELOW FROST LEVEL. (4 FEET)
3- 12 INCH CONCRETE COLLAR MINIMUM 24 INCHES PAST STRAIGHT SIDES.
4- FILL REMOVED, TO BE SLOPED AROUND OUTSIDE PERIMETER.

NONCOMPLIANCE VOIDS WARRANTY

5- ALL TOP RAIL POOLS AVAILABLE IN 42" WITH 5" TOP RAIL AND 48" WITH 3" TOP RAIL.

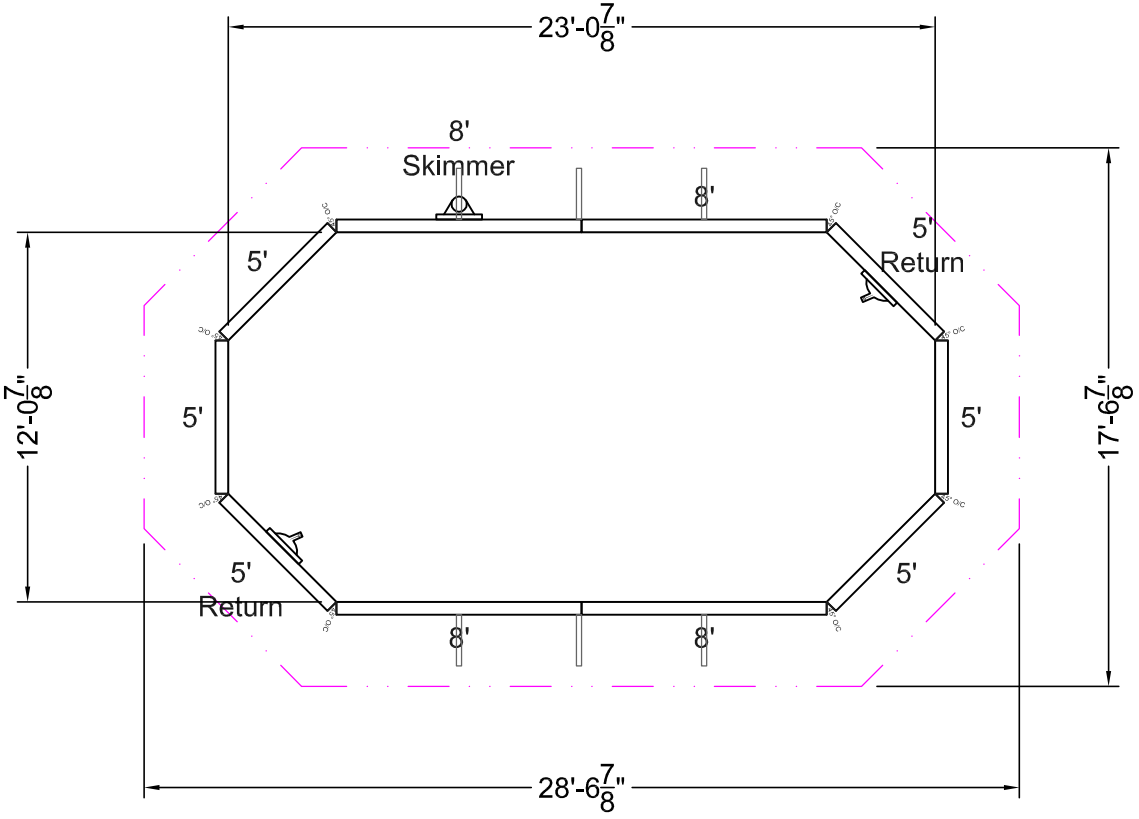

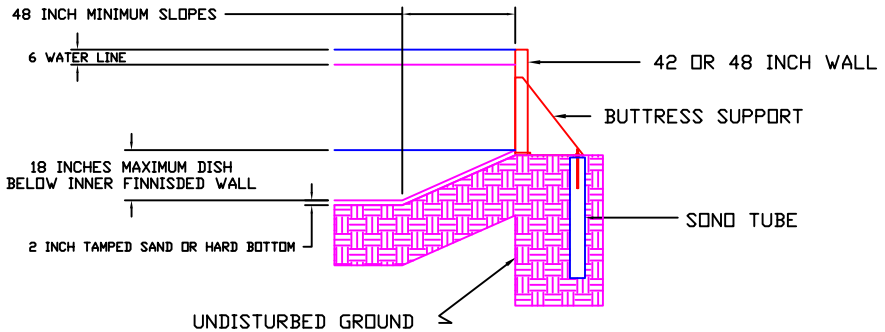

DESCRIPTION	QTY
5' STR	4
5' STR RTN	2
8' STR	3
8' STR SKM	1
45° O/C	8
BUTTRESS SUPPORTS	6
STD HARDWARE PACK	1

ONGROUND TOP RAIL POOLS

KIT REF# MNT1223-GR-42

MEGNA POOLS

Megna Plastic Packaging Corp.

SIZE:	SHAPE:	HAND:	DWG#	
12'-1" x 23'-1"	GRECIAN	N/A	12X23	B

PER.:	62'	S.A.:	253.49 ft²	VOL.:	0.00 gal.us	DATE: 22/11/2010	APPROVED:
PER.:	18.90 m	S.A.:	23.55 m²	VOL.:	0.00 liters	DRAWN BY: NM	

STAKE OUT

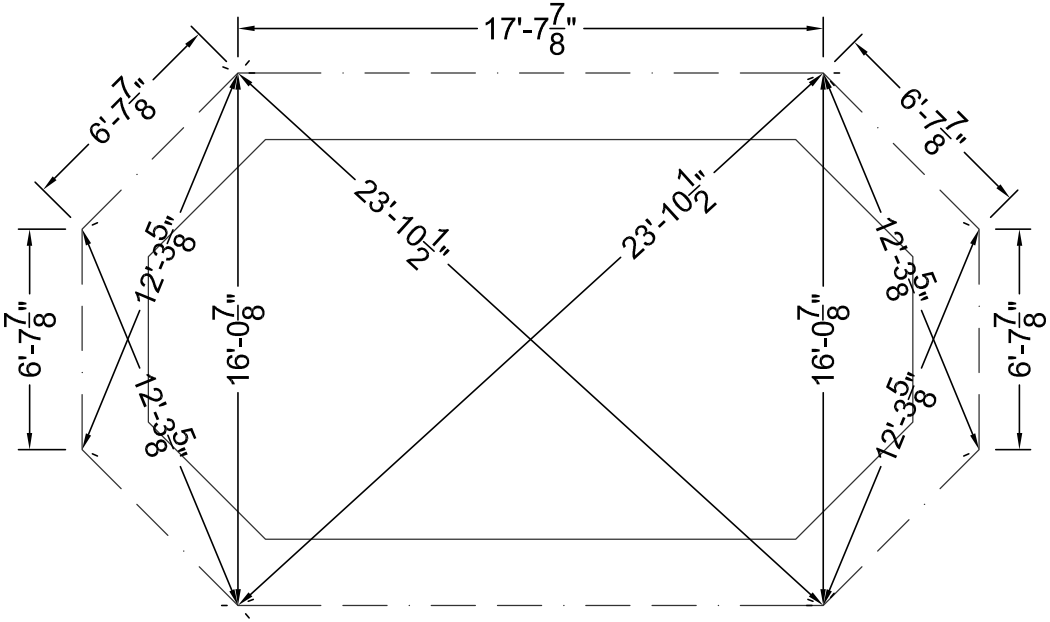

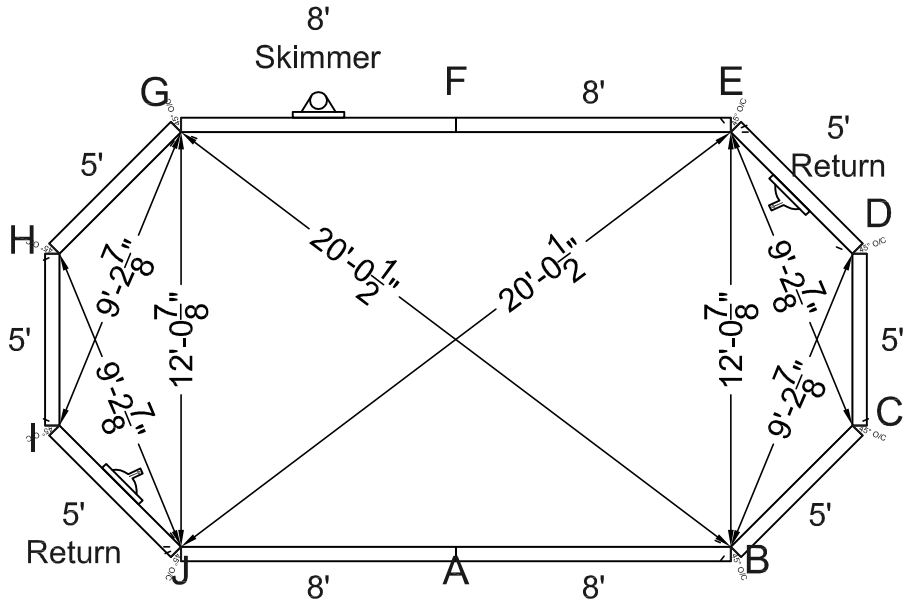

STEEL CHECK

KIT REF# MNT1223-GR-42

MEGNA POOLS
Megna Plastic Packaging Corp.

SIZE:	SHAPE:	HAND:	DWG#
12'-1" x 24'-1"	GRECIAN	N/A	12X24 A

PER.:	64'	S.A.:	265.56 ft²	VOL.:	0.00 gal.us
PER.:	19.51 m	S.A.:	24.67 m²	VOL.:	0.00 liters

DATE: 22/11/2010 | APPROVED:

DRAWN BY: NM

ALL DIMENSIONS ARE FINISHED

MANUFACTURING NOTICE

1- DUE TO UNCERTAIN GROUND VARIANCES POOL WALLS MUST BE INSTALLED A MINIMUM OF 6 INCHES BELOW GRADE
2- BUTTRESS SUPPORTS MUST BE FULLY SUPPORTED INCLUDING SONO TUBES BELOW FROST LEVEL. (4 FEET)
3- 12 INCH CONCRETE COLLAR MINIMUM 24 INCHES PAST STRAIGHT SIDES.
4- FILL REMOVED, TO BE SLOPED AROUND OUTSIDE PERIMETER.

NONCOMPLIANCE VOIDS WARRANTY

5- ALL TOP RAIL POOLS AVAILABLE IN 42" WITH 5" TOP RAIL AND 48" WITH 3" TOP RAIL.

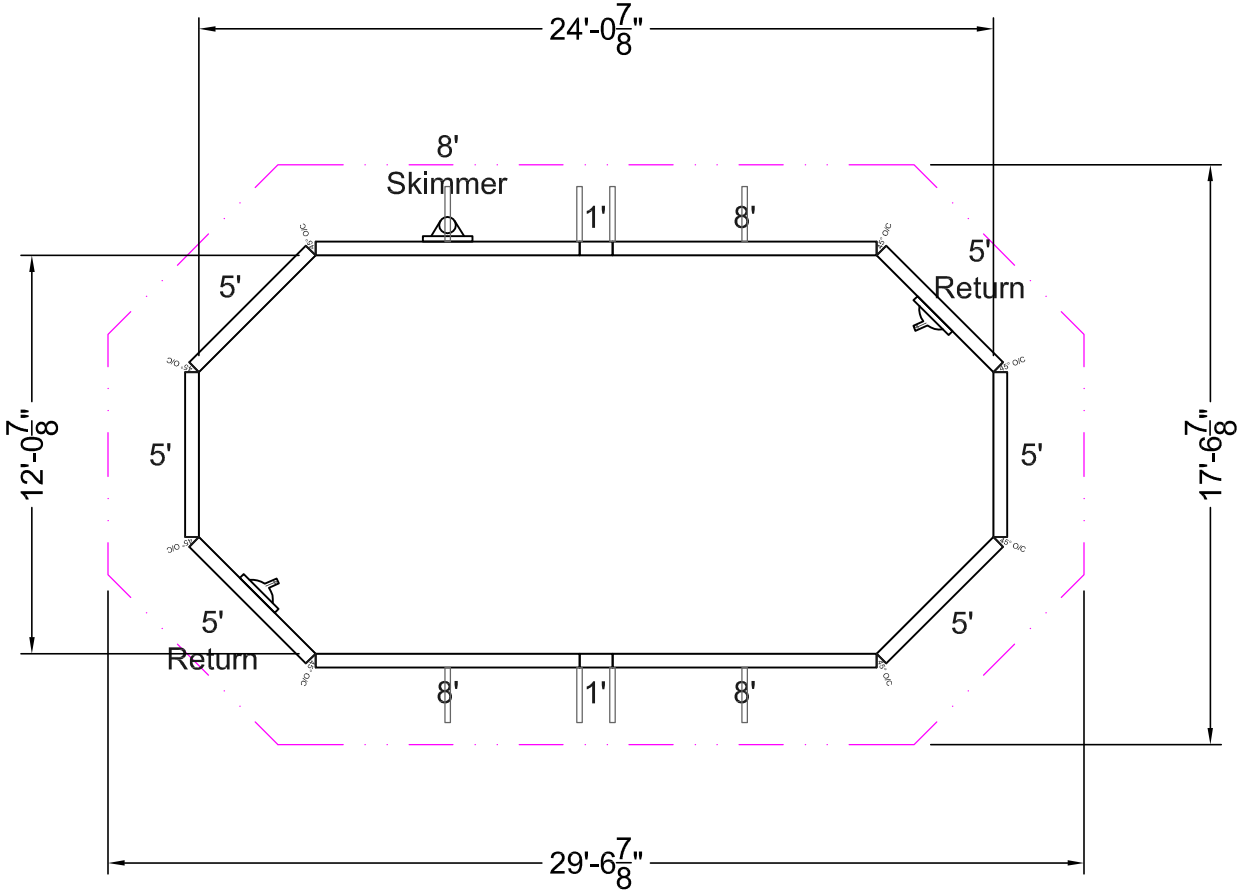

DESCRIPTION	QTY
1' STR	2
5' STR	4
5' STR RTN	2
8' STR	3
8' STR SKM	1
45° O/C	8
BUTTRESS SUPPORT	8
STD HARDWARE PACK	1

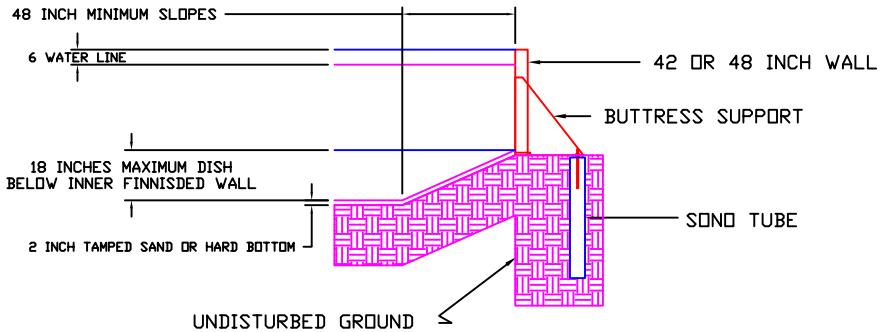

ONGROUND TOP RAIL POOLS

KIT REF# MNT1224-GR-42

MEGNA POOLS

Megna Plastic Packaging Corp.

SIZE:	SHAPE:		HAND:	DWG#	
12'-1" x 24'-1"	GRECIAN		N/A	12X24	B
PER.: 64'	S.A.: 265.56 ft²	VOL.: 0.00 gal.us	DATE: 22/11/2010	APPROVED:	
PER.: 19.51 m	S.A.: 24.67 m²	VOL.: 0.00 liters	DRAWN BY: NM		

STAKE OUT

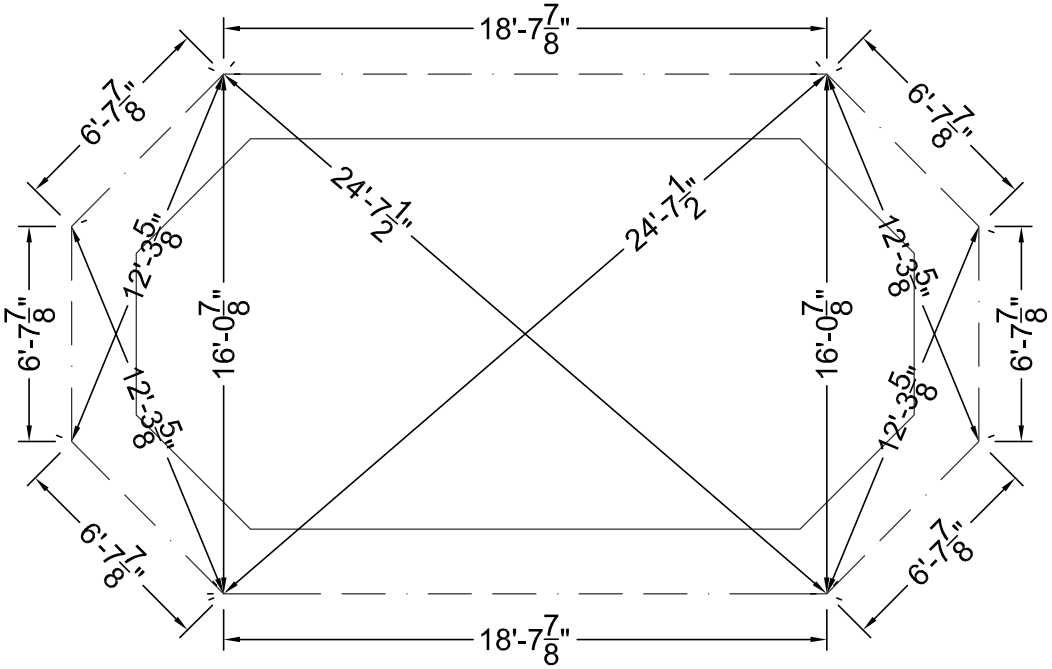

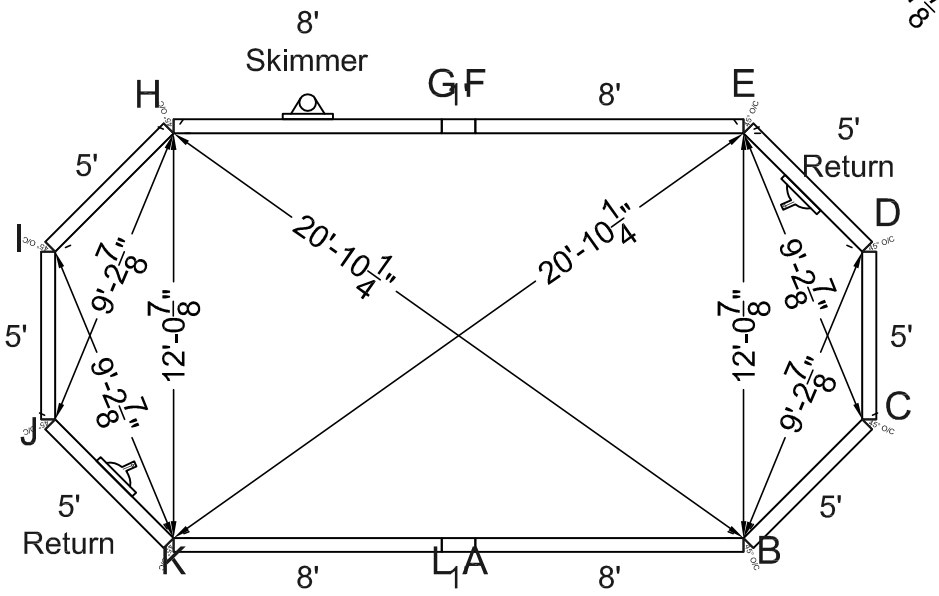

STEEL CHECK

KIT REF# MNT1224-GR-42

MEGNA POOLS
Megna Plastic Packaging Corp.

SIZE:	SHAPE:	HAND:	DWG#
14'-6" x 24'-6"	GRECIAN	N/A	14X24 A

PER.:	68'	S.A.:	318.68 ft²	VOL.:	0.00 gal.us
PER.:	20.73 m	S.A.:	29.61 m²	VOL.:	0.00 liters

DATE: 22/11/2010 | APPROVED:

DRAWN BY: NM

ALL DIMENSIONS ARE FINISHED

MANUFACTURING NOTICE

1- DUE TO UNCERTAIN GROUND VARIANCES POOL WALLS MUST BE INSTALLED A MINIMUM OF 6 INCHES BELOW GRADE
2- BUTTRESS SUPPORTS MUST BE FULLY SUPPORTED INCLUDING SONO TUBES BELOW FROST LEVEL. (4 FEET)
3- 12 INCH CONCRETE COLLAR MINIMUM 24 INCHES PAST STRAIGHT SIDES.
4- FILL REMOVED, TO BE SLOPED AROUND OUTSIDE PERIMETER.

NONCOMPLIANCE VOIDS WARRANTY

5- ALL TOP RAIL POOLS AVAILABLE IN 42" WITH 5" TOP RAIL AND 48" WITH 3" TOP RAIL.

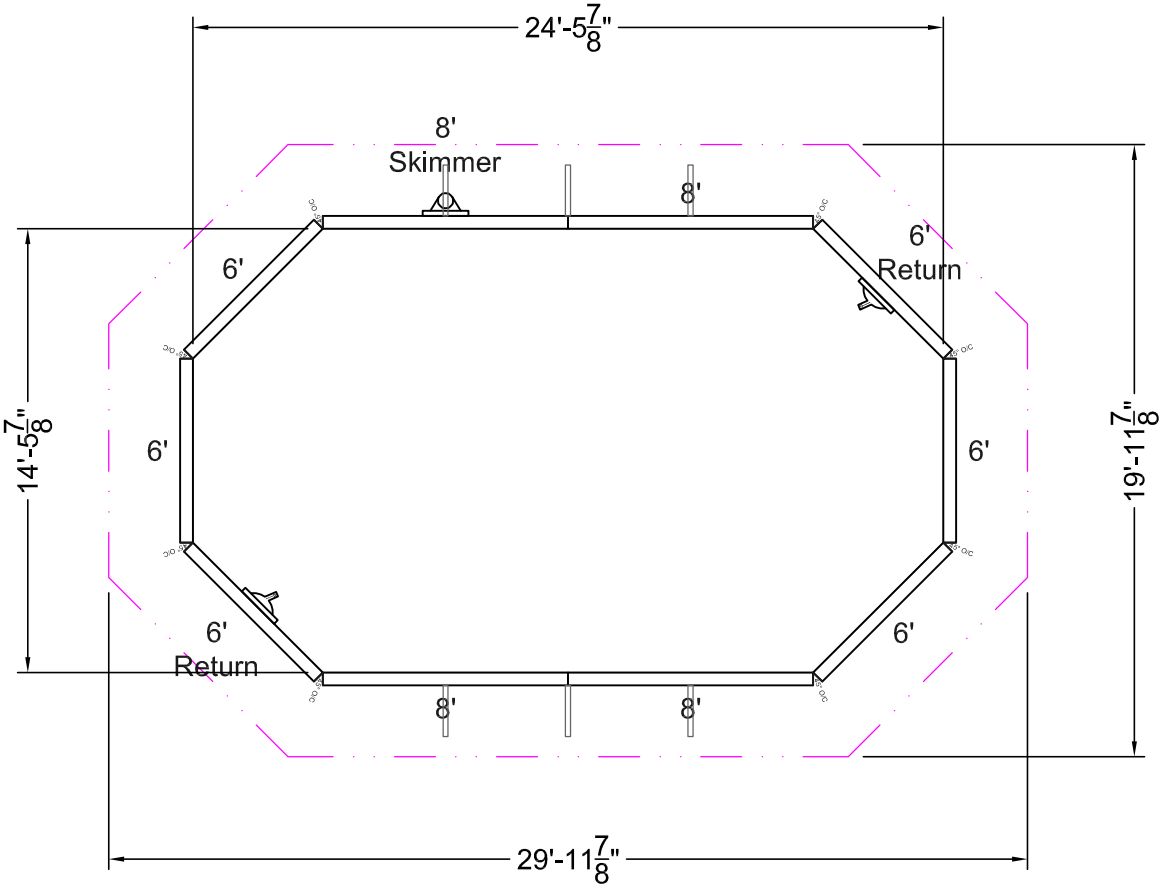

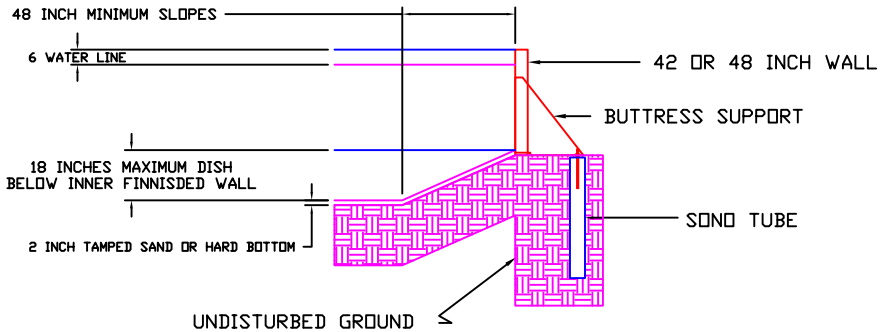

DESCRIPTION	QTY
6' STR	4
6' STR RTN	2
8' STR	3
8' STR SKM	1
45° O/C	8
BUTTRESS SUPPORT	6
STD HARDWARE PACK	1

ONGROUND TOP RAIL POOLS

KIT REF# MNT1424-GR-42

MEGNA POOLS
Megna Plastic Packaging Corp.

SIZE:	SHAPE:	HAND:	DWG#
14'-6" x 24'-6"	GRECIAN	N/A	14X24 B

PER.:	68'	S.A.:	318.68 ft²	VOL.:	0.00 gal.us	DATE: 22/11/2010	APPROVED:
PER.:	20.73 m	S.A.:	29.61 m²	VOL.:	0.00 liters	DRAWN BY: NM	

STAKE OUT

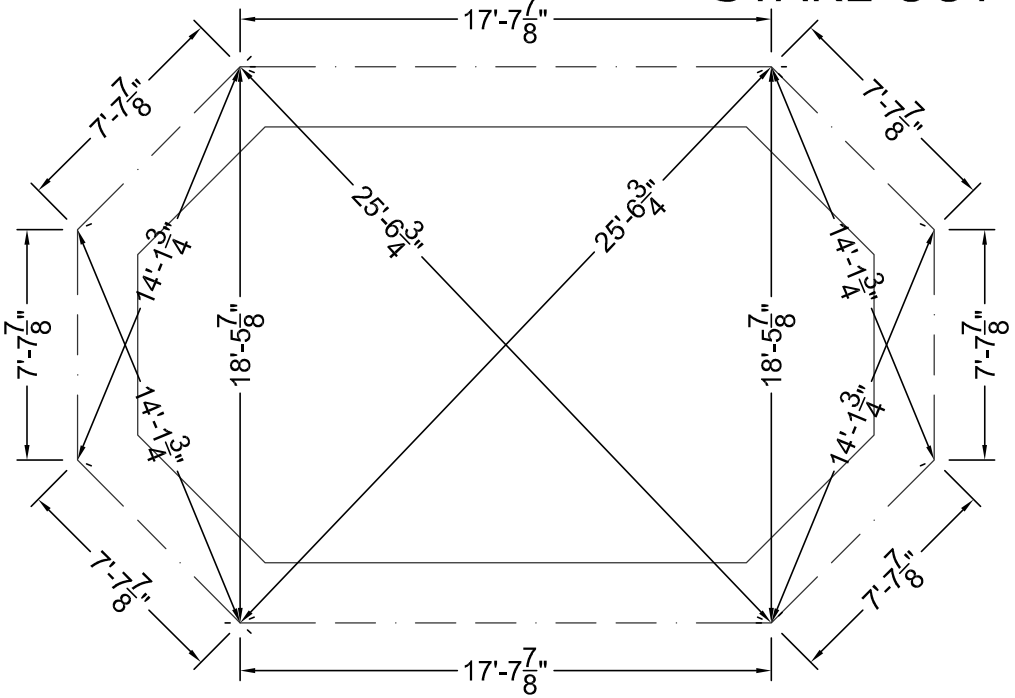

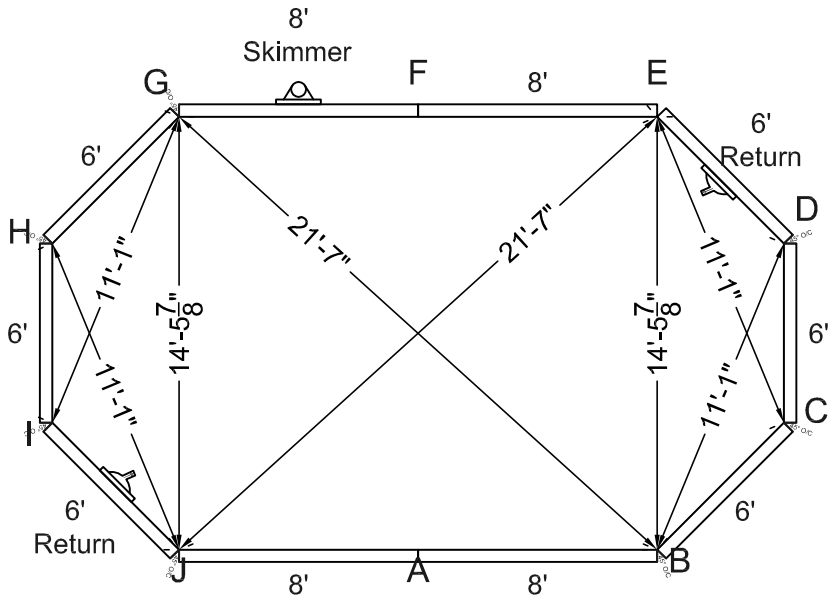

STEEL CHECK

KIT REF# MNT1424-GR-42

MEGNA POOLS

Megna Plastic Packaging Corp.

SIZE:	SHAPE:	HAND:	DWG#	
14'-6" x 28'-6"	GRECIAN	N/A	14X28	A

PER.:	76'	S.A.:	376.62 ft²	VOL.:	0.00 gal.us	DATE: 22/11/2010
PER.:	23.16 m	S.A.:	34.99 m²	VOL.:	0.00 liters	DRAWN BY: NM

APPROVED:

ALL DIMENSIONS ARE FINISHED

MANUFACTURING NOTICE

1- DUE TO UNCERTAIN GROUND VARIANCES POOL WALLS MUST BE INSTALLED A MINIMUM OF 6 INCHES BELOW GRADE
2- BUTTRESS SUPPORTS MUST BE FULLY SUPPORTED INCLUDING SONO TUBES BELOW FROST LEVEL. (4 FEET)
3- 12 INCH CONCRETE COLLAR MINIMUM 24 INCHES PAST STRAIGHT SIDES.
4- FILL REMOVED, TO BE SLOPED AROUND OUTSIDE PERIMETER.

NONCOMPLIANCE VOIDS WARRANTY

5- ALL TOP RAIL POOLS AVAILABLE IN 42" WITH 5" TOP RAIL AND 48" WITH 3" TOP RAIL.

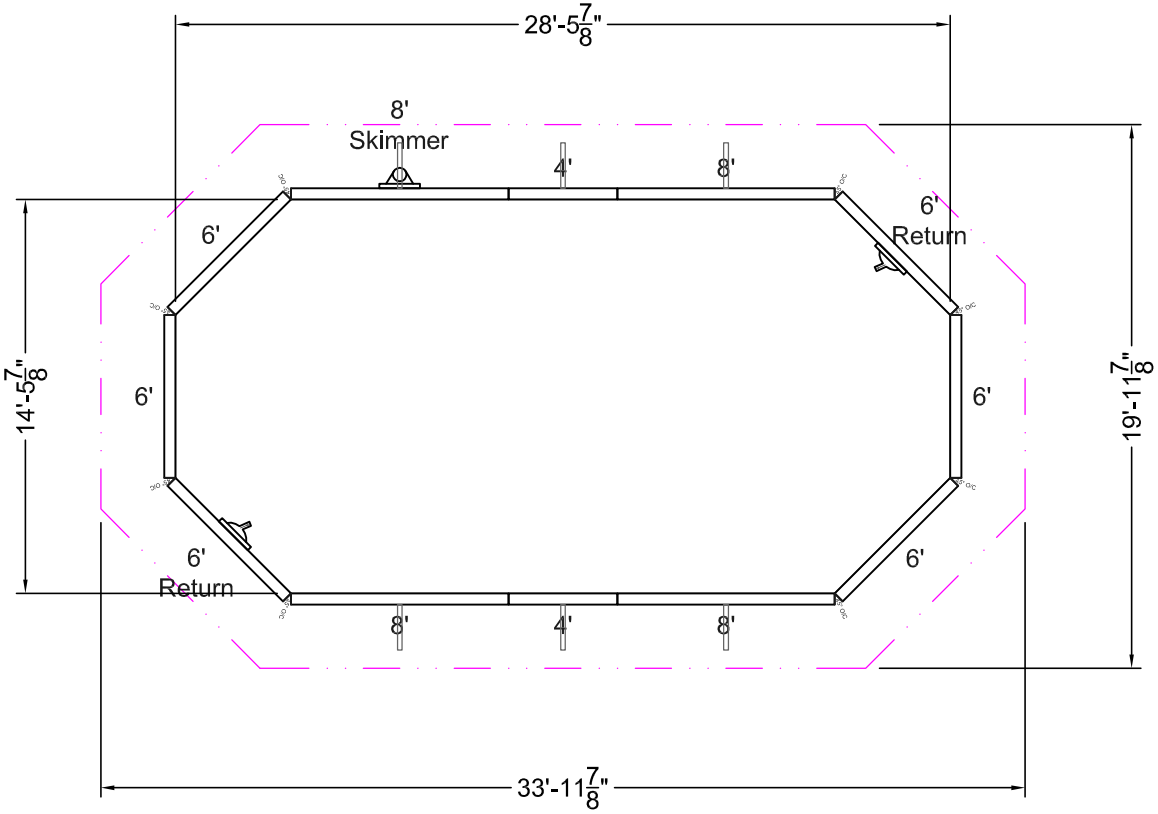

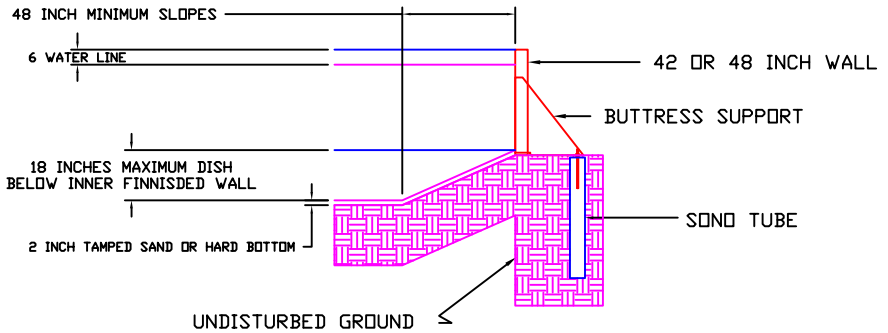

DESCRIPTION	QTY
4' STR	2
6' STR	4
6' STR RTN	2
8' STR	3
8' STR SKM	1
45° O/C	8
BUTTRESS SUPPORT	6
STD HARDWARE PACK	1

ONGROUND TOP RAIL POOLS

KIT REF# MNT1428-GR-42

MEGNA POOLS
Megna Plastic Packaging Corp.

SIZE: 14'-6" x 28'-6"	SHAPE: GRECIAN			HAND: N/A	DWG# 14X28 B
PER.: 76'	S.A.: 376.62 ft²	VOL.: 0.00 gal.us		DATE: 22/11/2010	APPROVED:
PER.: 23.16 m	S.A.: 34.99 m²	VOL.: 0.00 liters		DRAWN BY: NM	

STAKE OUT

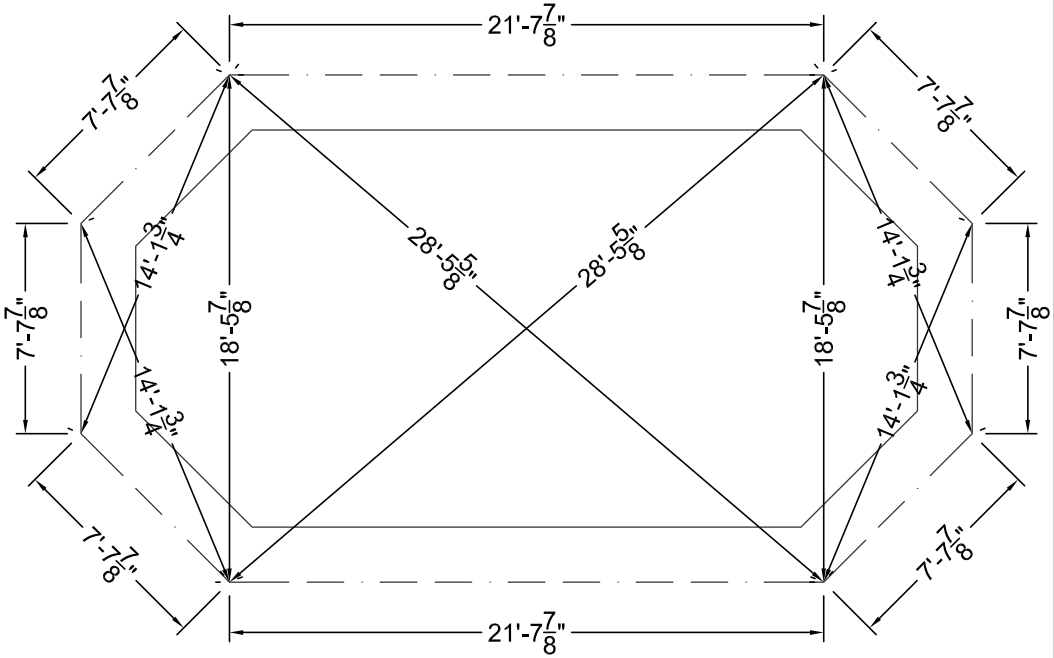

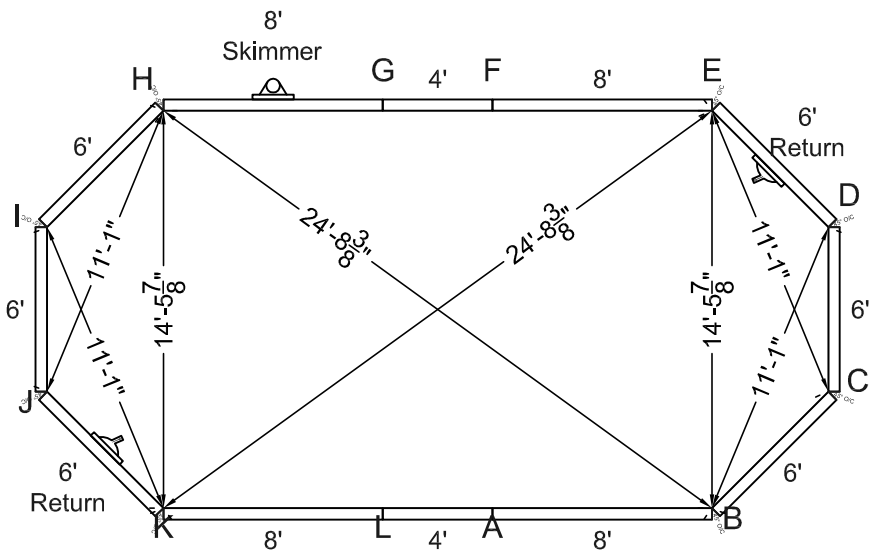

STEEL CHECK

KIT REF# MNT1428-GR-42

MEGNA POOLS
Megna Plastic Packaging Corp.

SIZE:	SHAPE:	HAND:	DWG#
16'-1" x 24'-1"	GRECIAN	N/A	16X24 A

PER.:	72'	S.A.:	361.85 ft²	VOL.:	0.00 gal.us
PER.:	21.95 m	S.A.:	33.62 m²	VOL.:	0.00 liters

DATE: 13/12/2010 | APPROVED:
DRAWN BY: NM

ALL DIMENSIONS ARE FINISHED

MANUFACTURING NOTICE

1- DUE TO UNCERTAIN GROUND VARIANCES POOL WALLS MUST BE INSTALLED A MINIMUM OF 6 INCHES BELOW GRADE
2- BUTTRESS SUPPORTS MUST BE FULLY SUPPORTED INCLUDING SONO TUBES BELOW FROST LEVEL. (4 FEET)
3- 12 INCH CONCRETE COLLAR MINIMUM 24 INCHES PAST STRAIGHT SIDES.
4- FILL REMOVED, TO BE SLOPED AROUND OUTSIDE PERIMETER.

NONCOMPLIANCE VOIDS WARRANTY

5- ALL TOP RAIL POOLS AVAILABLE IN 42" WITH 5" TOP RAIL AND 48" WITH 3" TOP RAIL.

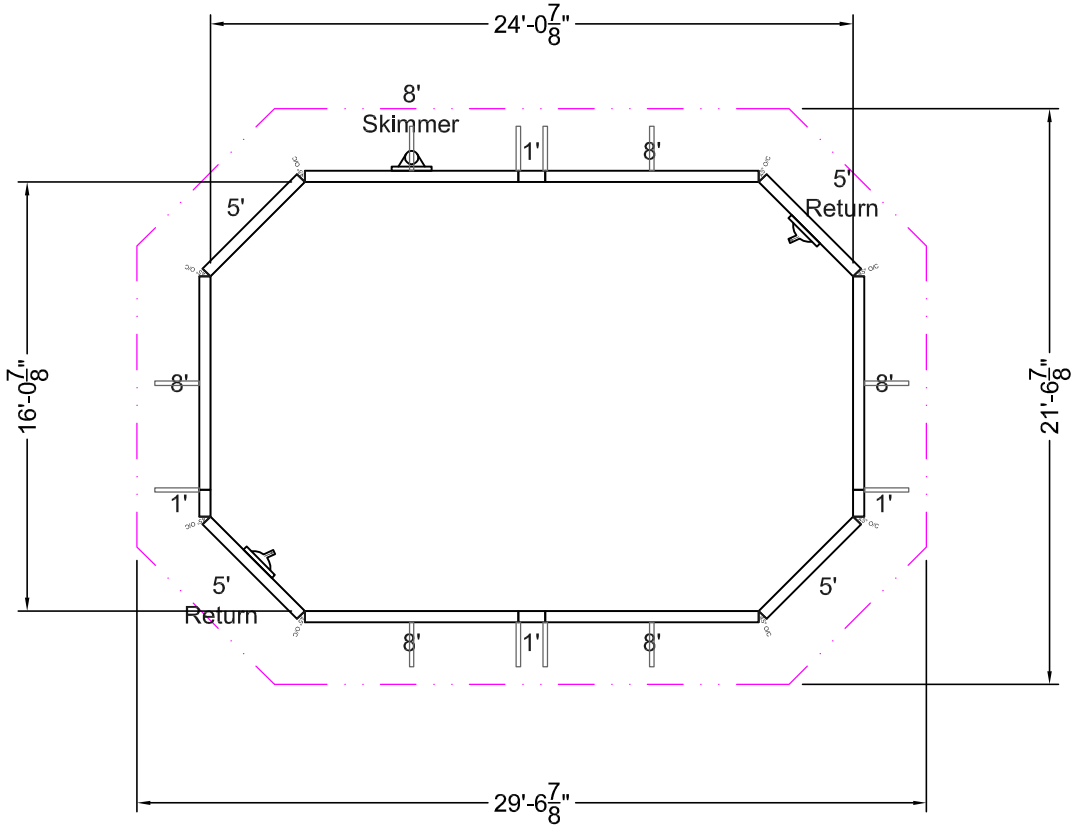

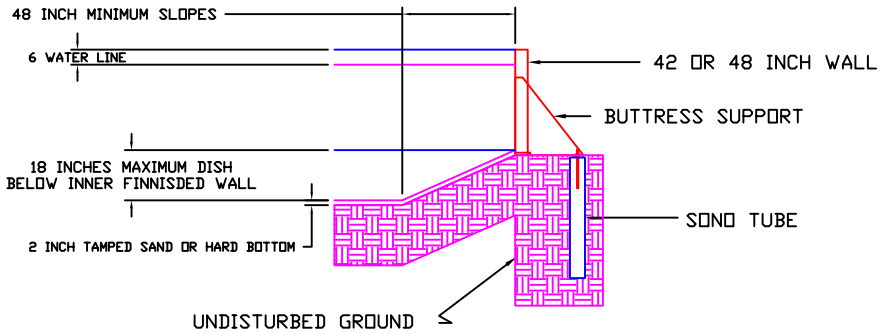

DESCRIPTION	QTY
1' STR	4
5' STR	2
5' STR RTN	2
8' STR	5
8' STR SKM	1
45° O/C	8
BUTTRESS SUPPORT	12
STD HARDWARE PACK	1

ONGROUND TOP RAIL POOLS

KIT REF# MNT1624-GR-42

MEGNA POOLS

Megna Plastic Packaging Corp.

SIZE:	SHAPE:	HAND:	DWG#
16'-1" x 24'-1"	GRECIAN	N/A	16X24 B

PER.:	72'	S.A.:	361.85 ft²	VOL.:	0.00 gal.us
PER.:	21.95 m	S.A.:	33.62 m²	VOL.:	0.00 liters

DATE: 13/12/2010

DRAWN BY: NM

APPROVED:

STAKE OUT

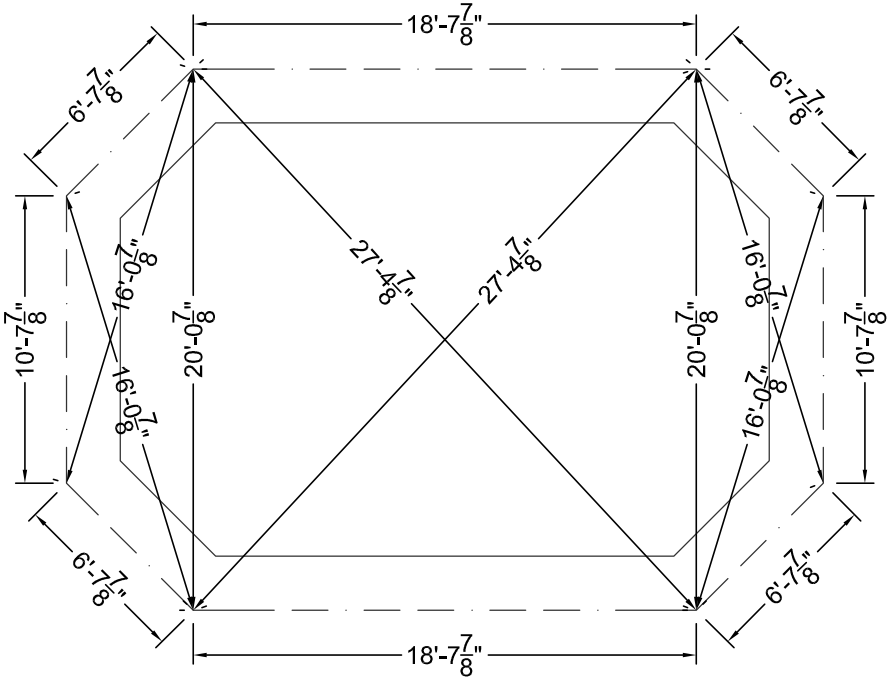

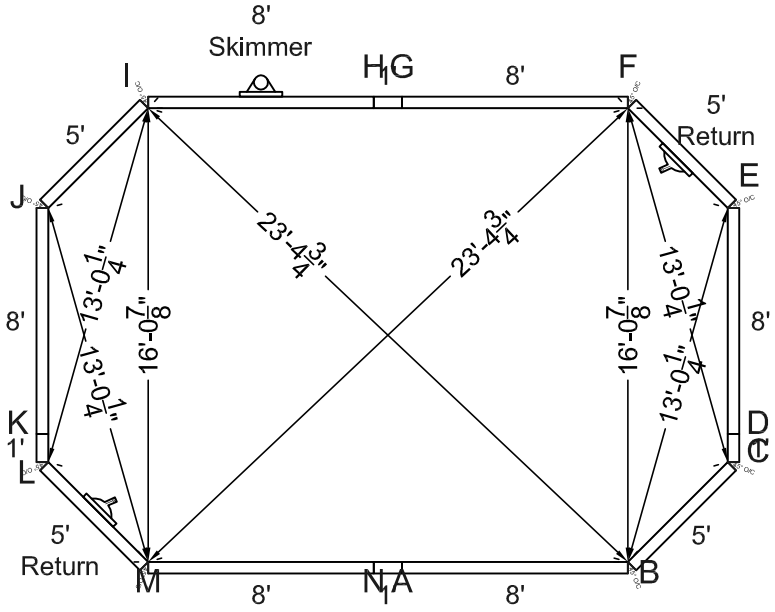

STEEL CHECK

KIT REF# MNT1624-GR-42

MEGNA POOLS
Megna Plastic Packaging Corp.

SIZE:	SHAPE:	HAND:	DWG#
16'-6" x 32'-6"	GRECIAN	N/A	16X32 A

PER.:	88'	S.A.:	499.53 ft²	VOL.:	0.00 gal.us
PER.:	26.82 m	S.A.:	46.41 m²	VOL.:	0.00 liters

DATE: 22/11/2010 | APPROVED:

DRAWN BY: NM

ALL DIMENSIONS ARE FINISHED

MANUFACTURING NOTICE

1- DUE TO UNCERTAIN GROUND VARIANCES POOL WALLS MUST BE INSTALLED A MINIMUM OF 6 INCHES BELOW GRADE
2- BUTTRESS SUPPORTS MUST BE FULLY SUPPORTED INCLUDING SONO TUBES BELOW FROST LEVEL. (4 FEET)
3- 12 INCH CONCRETE COLLAR MINIMUM 24 INCHES PAST STRAIGHT SIDES.
4- FILL REMOVED, TO BE SLOPED AROUND OUTSIDE PERIMETER.

NONCOMPLIANCE VOIDS WARRANTY

5- ALL TOP RAIL POOLS AVAILABLE IN 42" WITH 5" TOP RAIL AND 48" WITH 3" TOP RAIL.

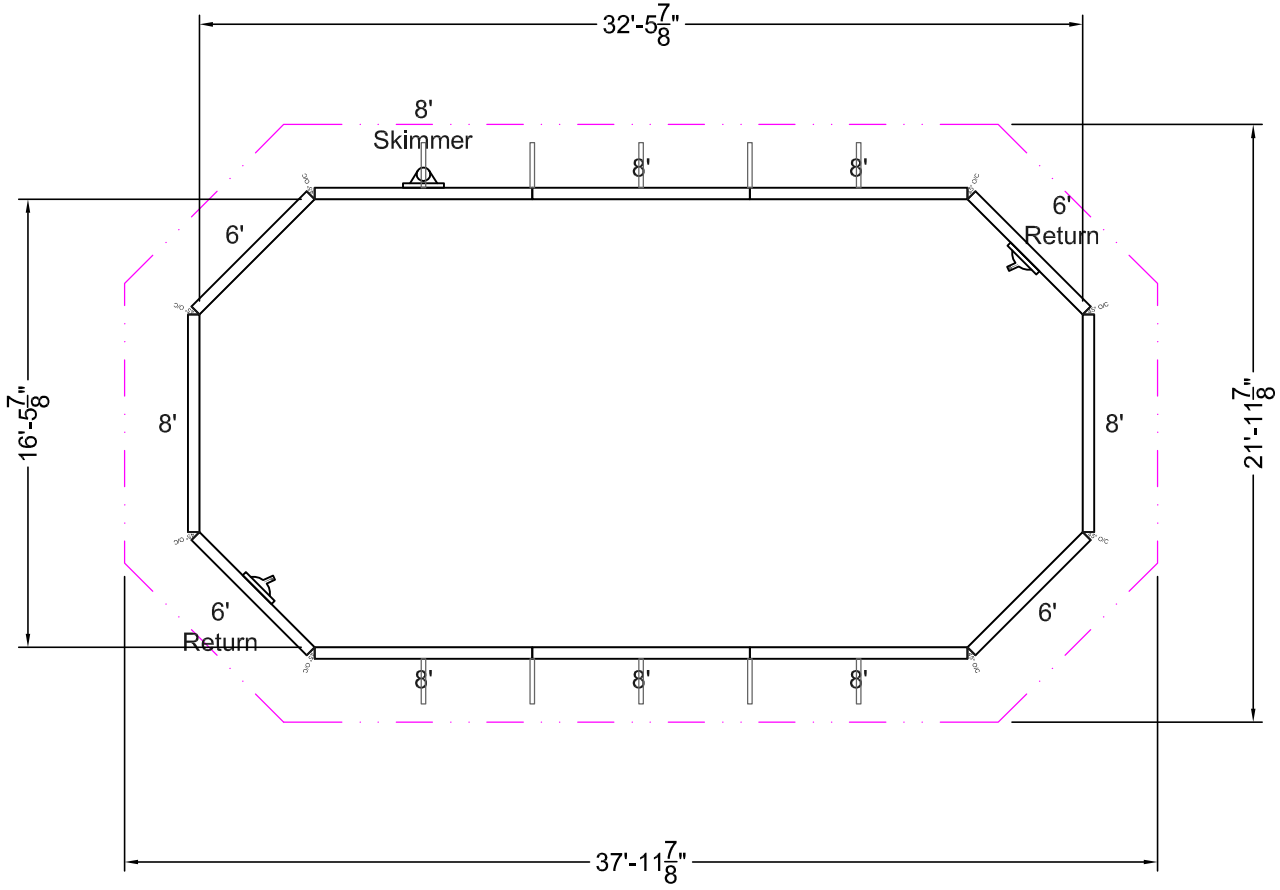

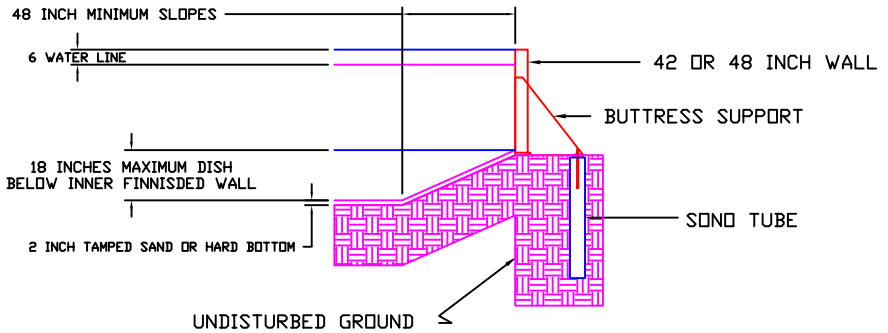

DESCRIPTION	QTY
6' STR	2
6' STR RTN	2
8' STR	7
8' STR SKM	1
45° O/C	8
BUTTRESS SUPPORT	10
STD HARDWARE PACK	1

ONGROUND TOP RAIL POOLS

KIT REF# MNT1632-GR-42

MEGNA POOLS

Megna Plastic Packaging Corp.

SIZE:	SHAPE:	HAND:	DWG#	
16'-6" x 32'-6"	GRECIAN	N/A	16X32	B

PER.:	88'	S.A.:	499.53 ft²	VOL.:	0.00 gal.us	DATE: 22/11/2010	APPROVED:
PER.:	26.82 m	S.A.:	46.41 m²	VOL.:	0.00 liters	DRAWN BY: NM	

STAKE OUT

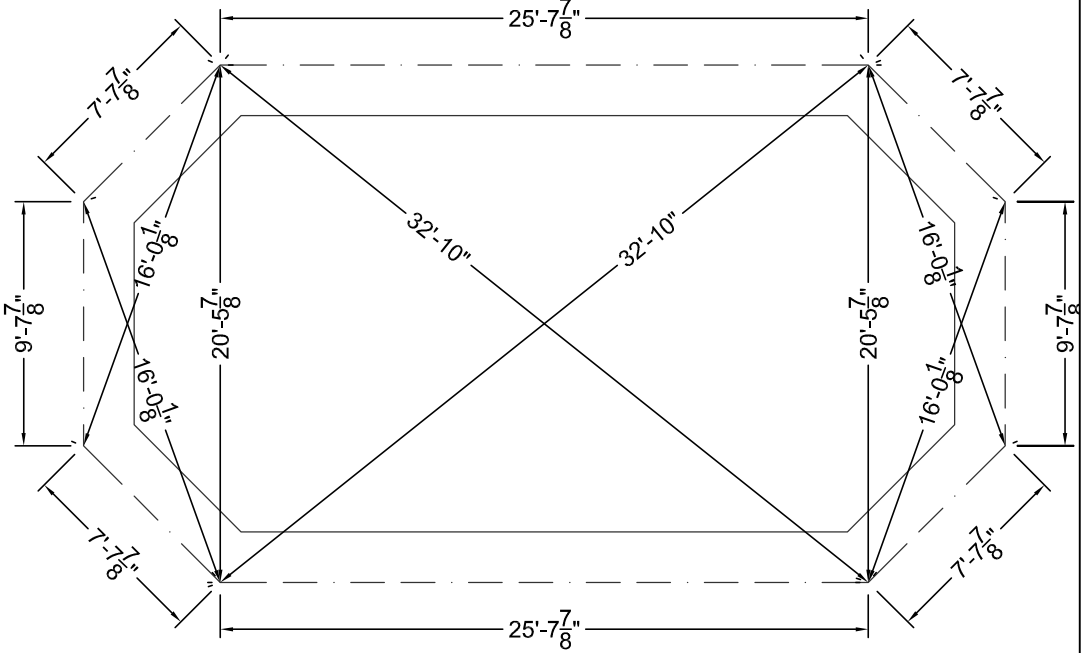

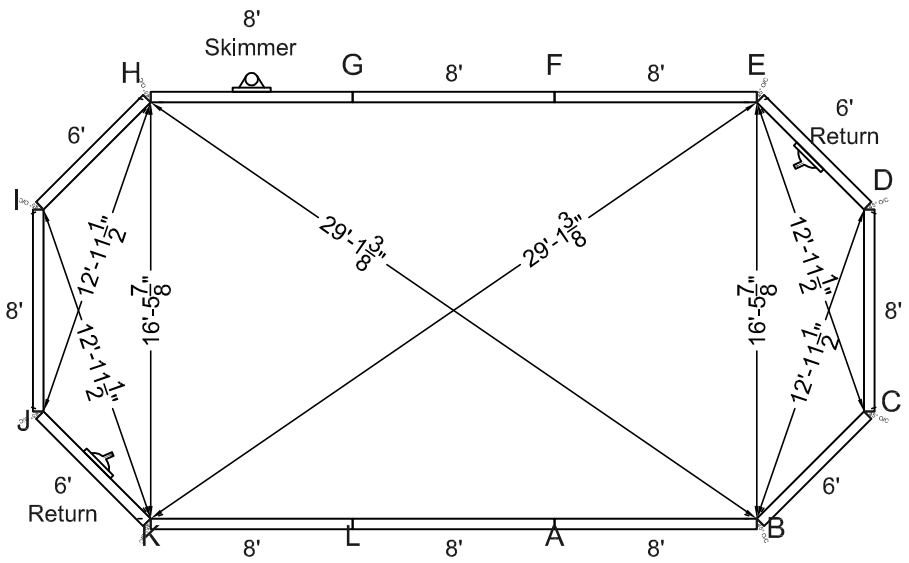

STEEL CHECK

KIT REF# MNT1632-GR-42

MEGNA POOLS
Megna Plastic Packaging Corp.

SIZE:	SHAPE:	HAND:	DWG#	
16'-11" x 30'-11"	GRECIAN	N/A	17X31	A

PER.:	84'	S.A.:	473.19 ft²	VOL.:	0.00 gal.us	DATE: 22/11/2010	APPROVED:
PER.:	25.60 m	S.A.:	43.96 m²	VOL.:	0.00 liters	DRAWN BY: NM	

ALL DIMENSIONS ARE FINISHED

MANUFACTURING NOTICE

1- DUE TO UNCERTAIN GROUND VARIANCES POOL WALLS MUST BE INSTALLED A MINIMUM OF 6 INCHES BELOW GRADE
2- BUTTRESS SUPPORTS MUST BE FULLY SUPPORTED INCLUDING SONO TUBES BELOW FROST LEVEL. (4 FEET)
3- 12 INCH CONCRETE COLLAR MINIMUM 24 INCHES PAST STRAIGHT SIDES.
4- FILL REMOVED, TO BE SLOPED AROUND OUTSIDE PERIMETER.

NONCOMPLIANCE VOIDS WARRANTY

5- ALL TOP RAIL POOLS AVAILABLE IN 42" WITH 5" TOP RAIL AND 48" WITH 3" TOP RAIL.

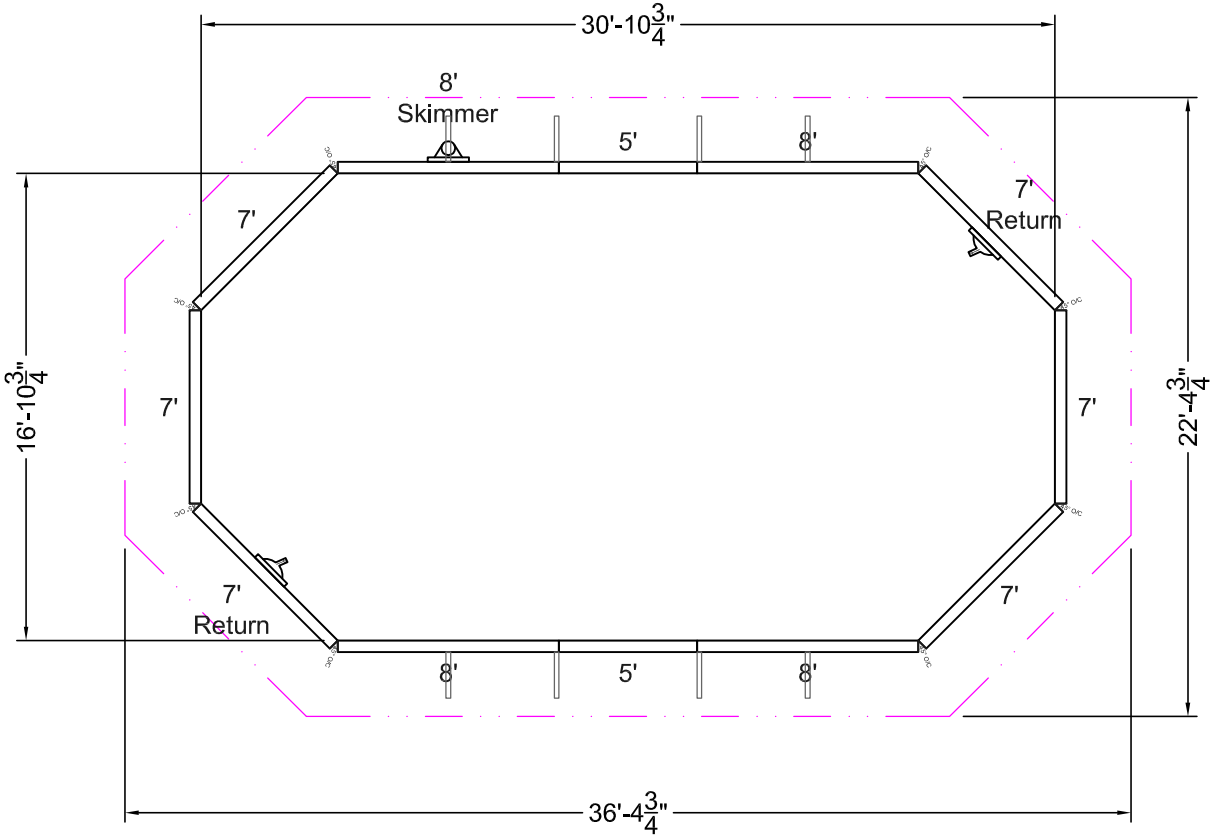

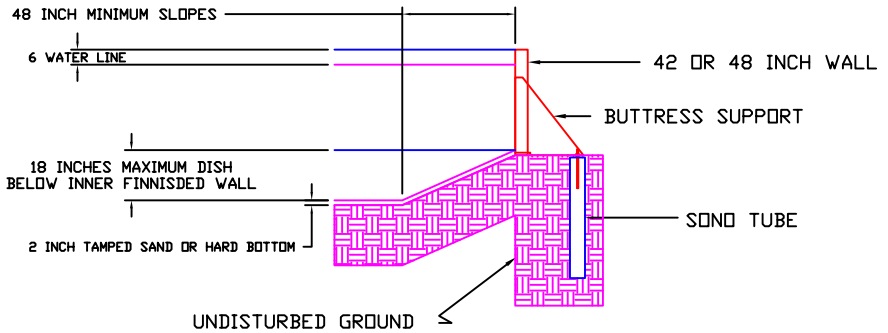

DESCRIPTION	QTY
5' STR	2
7' STR	4
7' STR RTN	2
8' STR	3
8' STR SKM	1
45° O/C	8
BUTTRESS SUPPORT	8
STD HARDWARE PACK	1

ONGROUND TOP RAIL POOLS

KIT REF# MNT1731-GR-42

MEGNA POOLS

Megna Plastic Packaging Corp.

SIZE:	SHAPE:	HAND:	DWG#	
16'-11" x 30'-11"	GRECIAN	N/A	17X31	B

PER.:	84'	S.A.:	473.19 ft²	VOL.:	0.00 gal.us	DATE: 22/11/2010	APPROVED:
PER.:	25.60 m	S.A.:	43.96 m²	VOL.:	0.00 liters	DRAWN BY: NM	

STAKE OUT

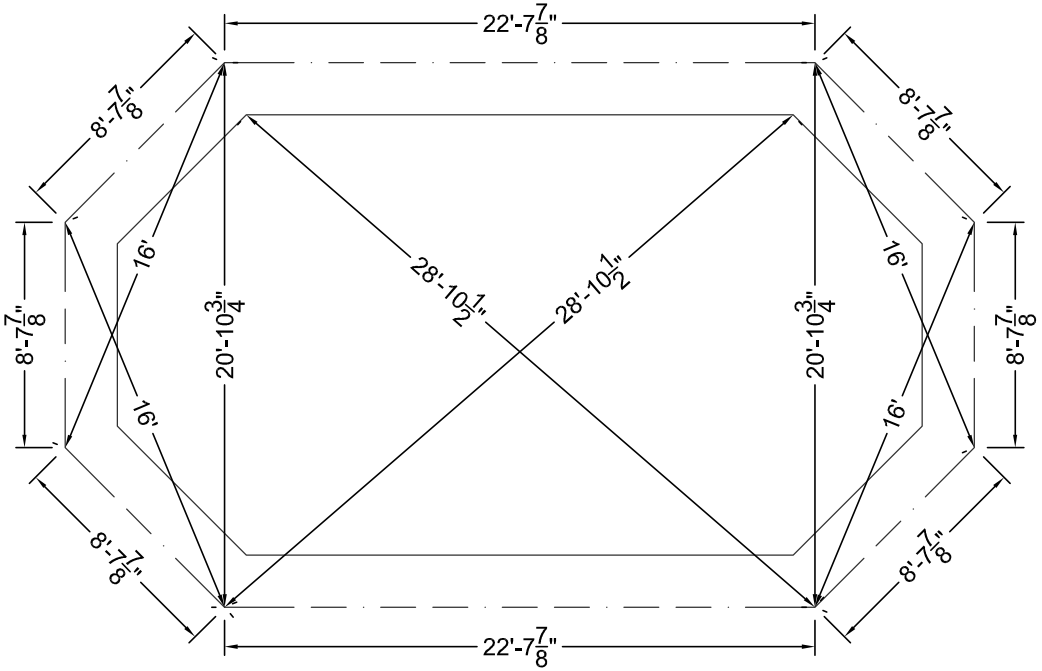

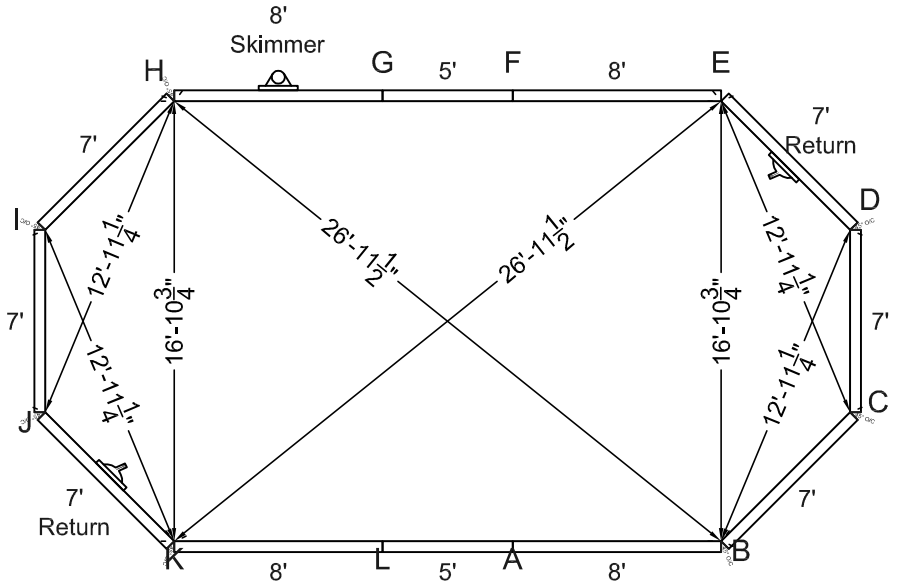

STEEL CHECK

KIT REF# MNT1731-GR-42

MEGNA POOLS
Megna Plastic Packaging Corp.

SIZE:	SHAPE:	HAND:	DWG#
16'-11" x 33'-11"	GRECIAN	N/A	17X34 A

PER.:	90'	S.A.:	523.88 ft²	VOL.:	0.00 gal.us
PER.:	27.43 m	S.A.:	48.67 m²	VOL.:	0.00 liters

DATE: 22/11/2010 | APPROVED:

DRAWN BY: NM

ALL DIMENSIONS ARE FINISHED

MANUFACTURING NOTICE

1- DUE TO UNCERTAIN GROUND VARIANCES POOL WALLS MUST BE INSTALLED A MINIMUM OF 6 INCHES BELOW GRADE
2- BUTTRESS SUPPORTS MUST BE FULLY SUPPORTED INCLUDING SONO TUBES BELOW FROST LEVEL. (4 FEET)
3- 12 INCH CONCRETE COLLAR MINIMUM 24 INCHES PAST STRAIGHT SIDES.
4- FILL REMOVED, TO BE SLOPED AROUND OUTSIDE PERIMETER.

NONCOMPLIANCE VOIDS WARRANTY

5- ALL TOP RAIL POOLS AVAILABLE IN 42" WITH 5" TOP RAIL AND 48" WITH 3" TOP RAIL.

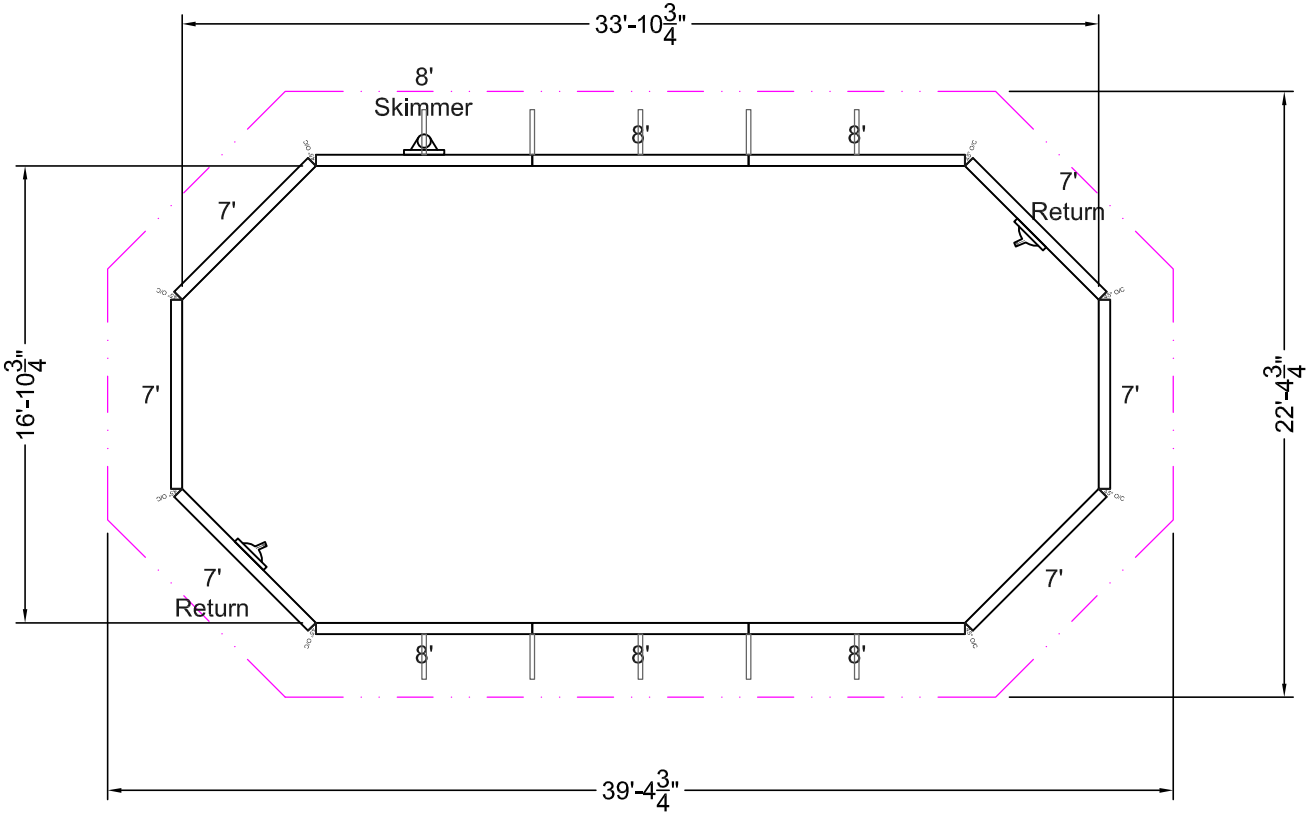

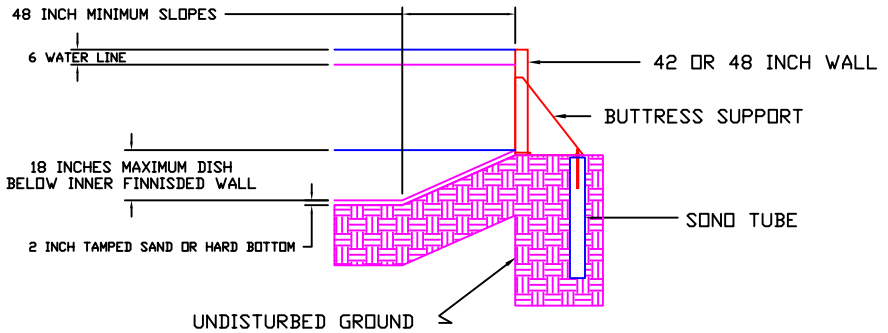

DESCRIPTION	QTY
7' STR	4
7' STR RTN	2
8' STR	5
8' STR SKM	1
45° O/C	8
BUTTRESS SUPPORT	10
STD HARDWARE PACK	1

ONGROUND TOP RAIL POOLS

KIT REF# MNT1734-GR-42

MEGNA POOLS
Megna Plastic Packaging Corp.

SIZE:	SHAPE:	HAND:	DWG#	
16'-11" x 33'-11"	GRECIAN	N/A	17X34	B

PER.:	90'	S.A.:	523.88 ft²	VOL.:	0.00 gal.us	DATE: 22/11/2010	APPROVED:
PER.:	27.43 m	S.A.:	48.67 m²	VOL.:	0.00 liters	DRAWN BY: NM	

STAKE OUT

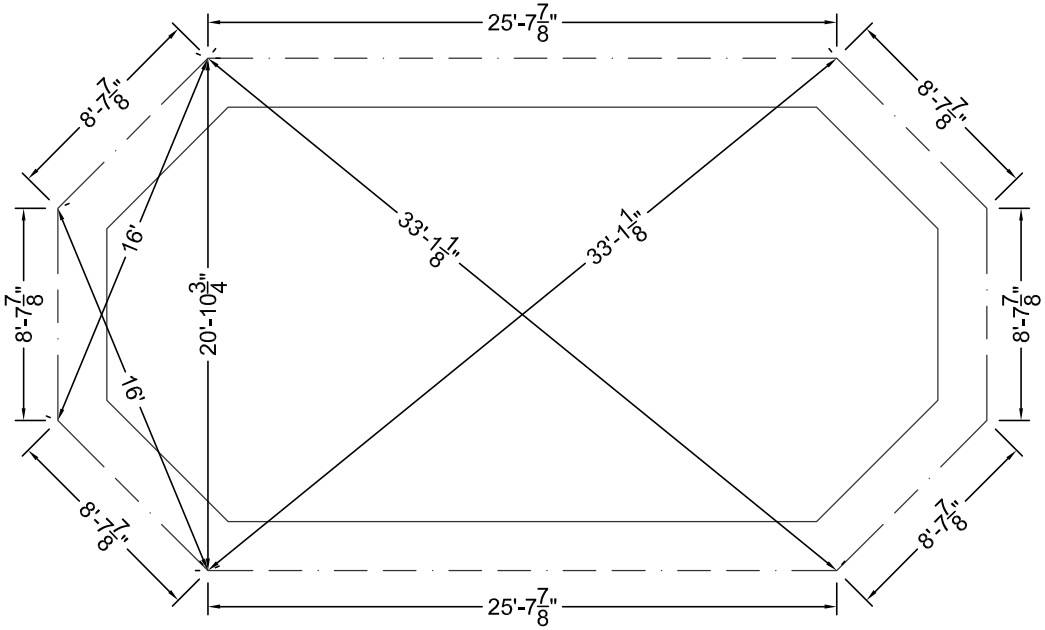

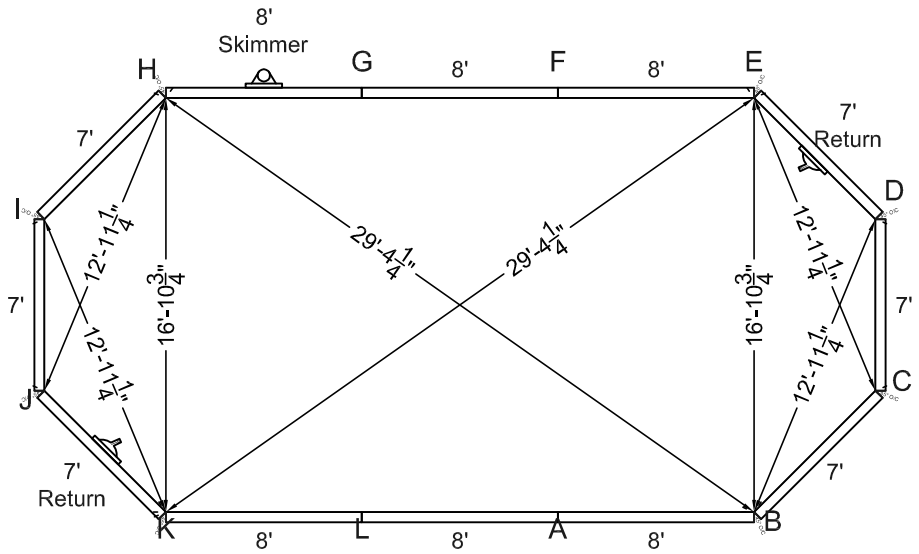

STEEL CHECK

KIT REF# MNT1734-GR-42

MEGNA POOLS
Megna Plastic Packaging Corp.

SIZE:	SHAPE:	HAND:	DWG#
19'-4" x 35'-4"	GRECIAN	N/A	19X35 A

PER.:	96'	S.A.:	618.04 ft²	VOL.:	0.00 gal.us
PER.:	29.26 m	S.A.:	57.42 m²	VOL.:	0.00 liters

DATE: 22/11/2010 | APPROVED:

DRAWN BY: NM

ALL DIMENSIONS ARE FINISHED

MANUFACTURING NOTICE

1- DUE TO UNCERTAIN GROUND VARIANCES POOL WALLS MUST BE INSTALLED A MINIMUM OF 6 INCHES BELOW GRADE
2- BUTTRESS SUPPORTS MUST BE FULLY SUPPORTED INCLUDING SONO TUBES BELOW FROST LEVEL. (4 FEET)
3- 12 INCH CONCRETE COLLAR MINIMUM 24 INCHES PAST STRAIGHT SIDES.
4- FILL REMOVED, TO BE SLOPED AROUND OUTSIDE PERIMETER.

NONCOMPLIANCE VOIDS WARRANTY

5- ALL TOP RAIL POOLS AVAILABLE IN
42" WITH 5" TOP RAIL AND
48" WITH 3" TOP RAIL.

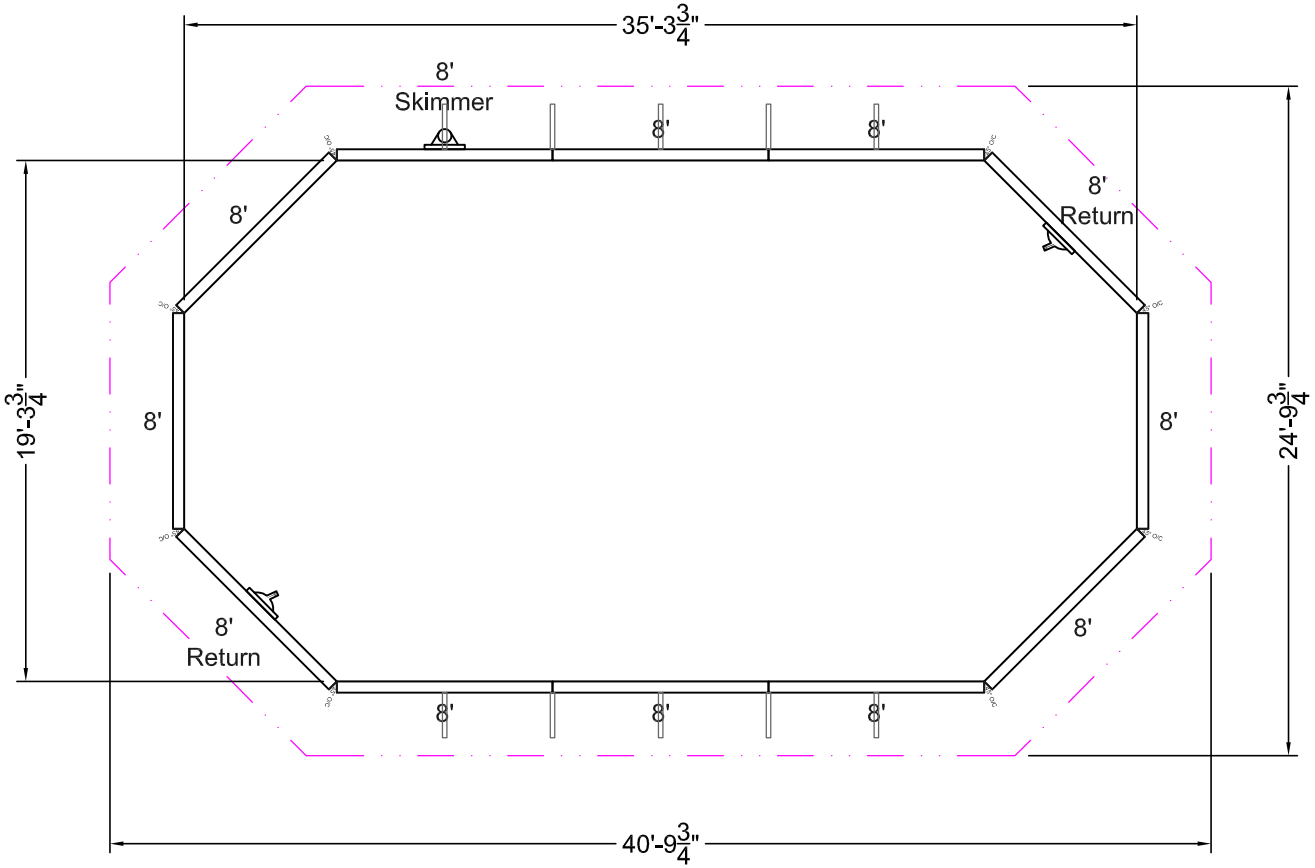

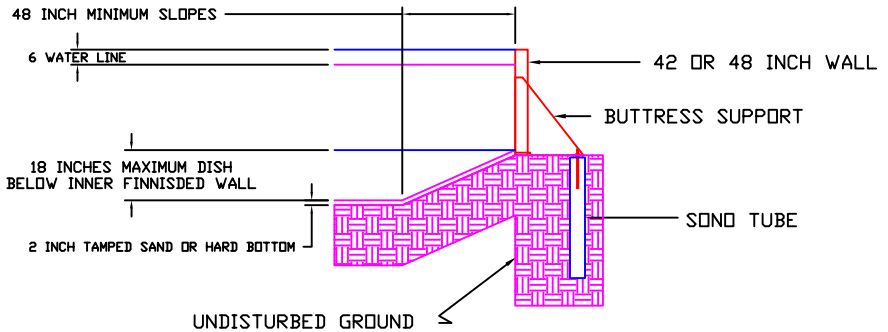

DESCRIPTION	QTY
8' STR	9
8' STR RTN	2
8' STR SKM	1
45° O/C	8
BUTTRESS SUPPORT	10
STD HARDWARE PACK	1

ONGROUND TOP RAIL POOLS

KIT REF# MNT1935-GR-42

MEGNA POOLS
Megna Plastic Packaging Corp.

SIZE:	SHAPE:	HAND:	DWG#
19'-4" x 35'-4"	GRECIAN	N/A	19X35 B

PER.:	96'	S.A.:	618.04 ft²	VOL.:	0.00 gal.us	DATE: 22/11/2010	APPROVED:
PER.:	29.26 m	S.A.:	57.42 m²	VOL.:	0.00 liters	DRAWN BY: NM	

STAKE OUT

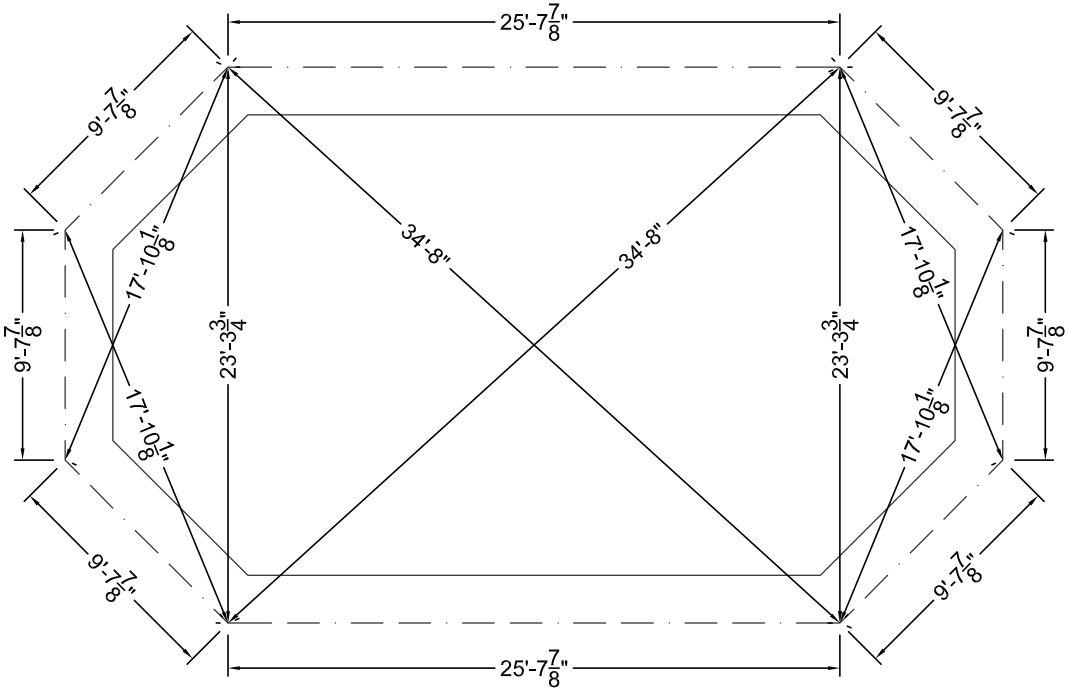

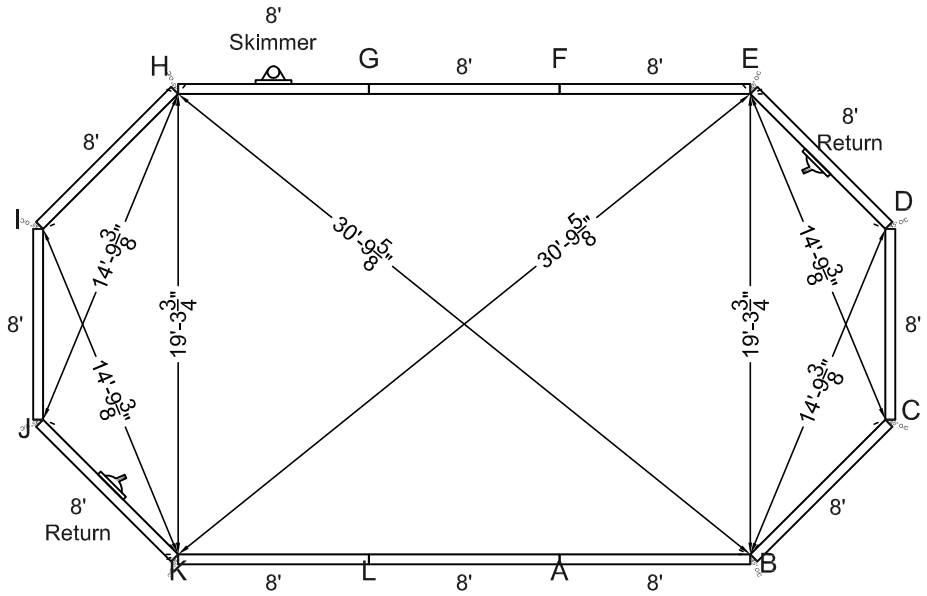

STEEL CHECK

KIT REF# MNT1935-GR-42

MEGNA POOLS
Megna Plastic Packaging Corp.

SIZE:	SHAPE:	HAND:	DWG#	
12'-8" x 23'-8"	MONARCH	LEFT	13X24X10	A

PER.:	64'	S.A.:	244.94 ft²	VOL.:	0.00 gal.us	DATE: 22/11/2010	APPROVED:
PER.:	19.51 m	S.A.:	22.76 m²	VOL.:	0.00 liters	DRAWN BY: NM	

ALL DIMENSIONS ARE FINISHED

MANUFACTURING NOTICE

1- DUE TO UNCERTAIN GROUND VARIANCES POOL WALLS MUST BE INSTALLED A MINIMUM OF 6 INCHES BELOW GRADE
2- BUTTRESS SUPPORTS MUST BE FULLY SUPPORTED INCLUDING SONO TUBES BELOW FROST LEVEL. (4 FEET)
3- 12 INCH CONCRETE COLLAR MINIMUM 24 INCHES PAST STRAIGHT SIDES.
4- FILL REMOVED, TO BE SLOPED AROUND OUTSIDE PERIMETER.

NONCOMPLIANCE VOIDS WARRANTY

5- ALL TOP RAIL POOLS AVAILABLE IN 42" WITH 5" TOP RAIL AND 48" WITH 3" TOP RAIL.

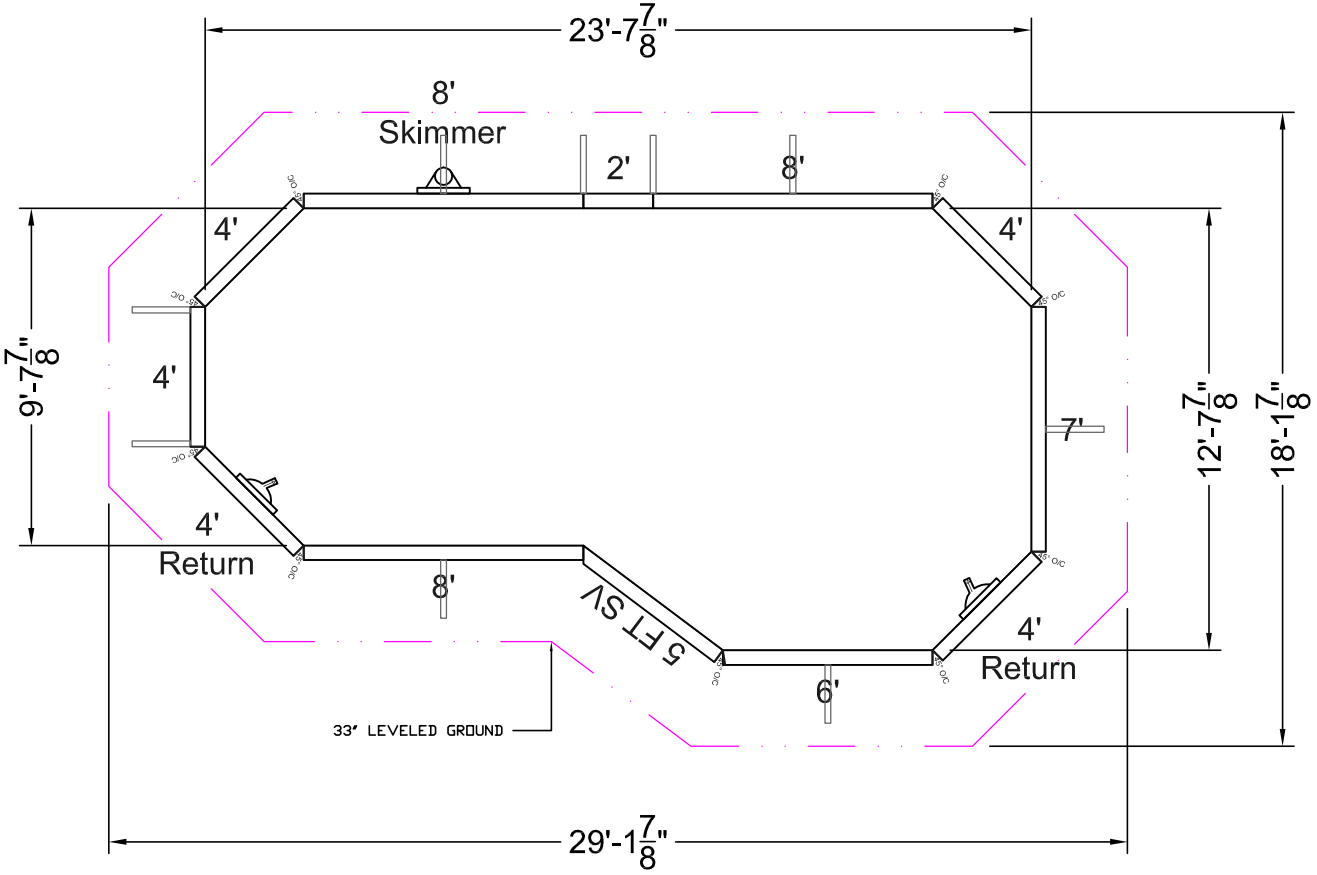

DESCRIPTION	QTY
2' STR	1
4' STR	3
4' STR RTN	2
6' STR	1
7' STR	1
8' STR	2
8' STR SKM	1
5 FT SV	1
45° O/C	9
BUTTRESS SUPPORT	9
STD HARDWARE PACK	1

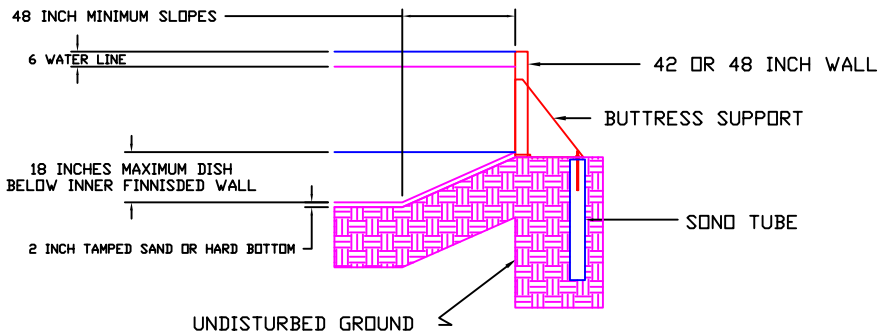

ONGROUND TOP RAIL POOLS

KIT REF# MNT1324LMO-42

MEGNA POOLS
Megna Plastic Packaging Corp.

SIZE: 12'-8" x 23'-8"		SHAPE: MONARCH			HAND: LEFT	DWG# 13X24X10	B
PER.:	64'	S.A.:	244.94 ft²	VOL.: 0.00 gal.us	DATE: 22/11/2010	APPROVED:	
PER.:	19.51 m	S.A.:	22.76 m²	VOL.: 0.00 liters	DRAWN BY: NM		

STAKE OUT

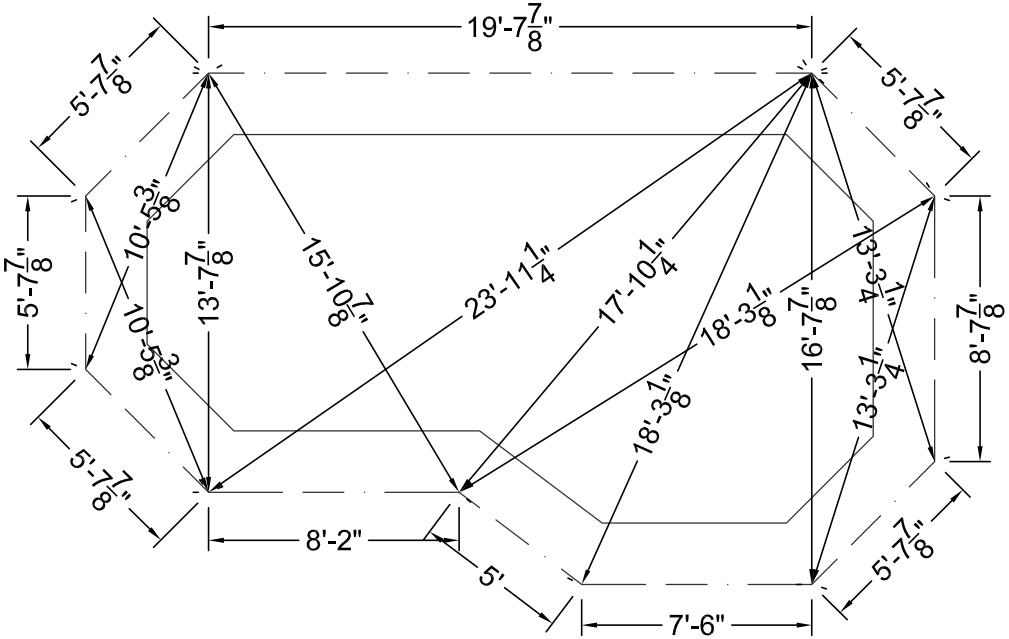

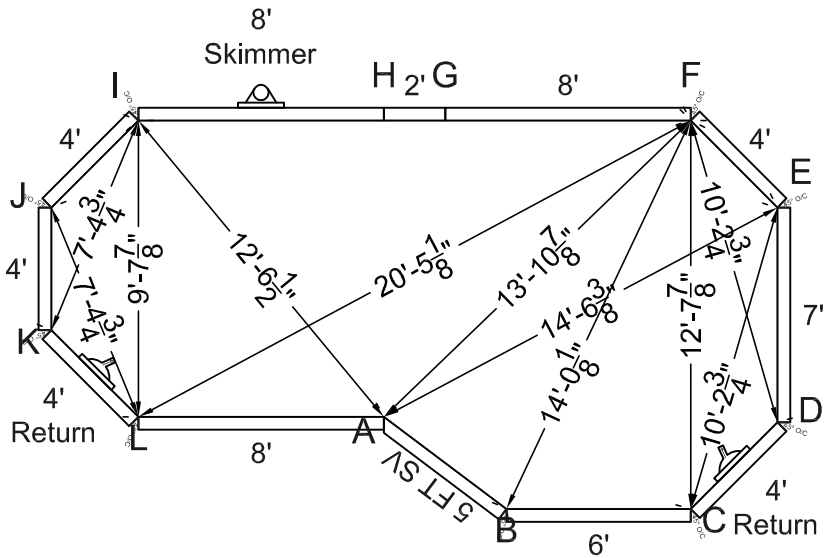

STEEL CHECK

KIT REF# MNT1324LMO-42

MEGNA POOLS

Megna Plastic Packaging Corp.

SIZE:	SHAPE:	HAND:	DWG#	
12'-8" x 23'-8"	MONARCH	RIGHT	13X24X10	A

PER.:	64'	S.A.:	244.94 ft²	VOL.:	0.00 gal.us	DATE: 22/11/2010	APPROVED:
PER.:	19.51 m	S.A.:	22.76 m²	VOL.:	0.00 liters	DRAWN BY: NM	

ALL DIMENSIONS ARE FINISHED

MANUFACTURING NOTICE

1- DUE TO UNCERTAIN GROUND VARIANCES POOL WALLS MUST BE INSTALLED A MINIMUM OF 6 INCHES BELOW GRADE
2- BUTTRESS SUPPORTS MUST BE FULLY SUPPORTED INCLUDING SONO TUBES BELOW FROST LEVEL. (4 FEET)
3- 12 INCH CONCRETE COLLAR MINIMUM 24 INCHES PAST STRAIGHT SIDES.
4- FILL REMOVED, TO BE SLOPED AROUND OUTSIDE PERIMETER.

NONCOMPLIANCE VOIDS WARRANTY

5- ALL TOP RAIL POOLS AVAILABLE IN 42" WITH 5" TOP RAIL AND 48" WITH 3" TOP RAIL.

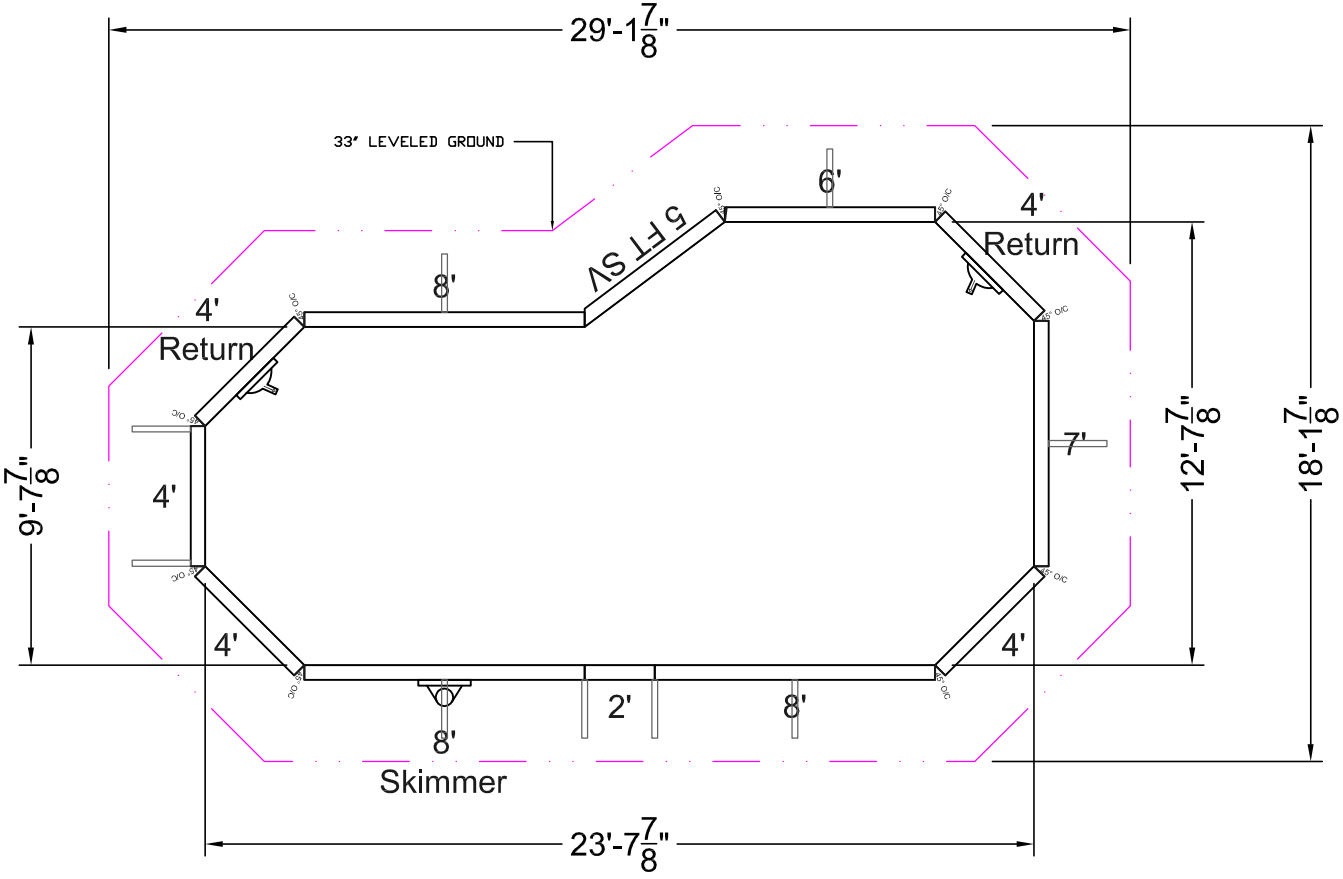

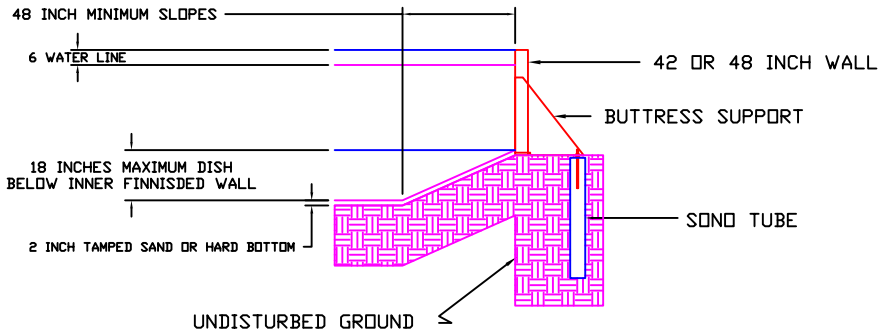

DESCRIPTION	QTY
2' STR	1
4' STR	3
4' STR RTN	2
6' STR	1
7' STR	1
8' STR	2
8' STR SKM	1
5 FT SV	1
45° O/C	9
BUTTRESS SUPPORT	9
STD HARDWARE PACK	1

ONGROUND TOP RAIL POOLS

KIT REF# MNT1324RMO-42

MEGNA POOLS

Megna Plastic Packaging Corp.

SIZE:		SHAPE:				HAND:	DWG#	
12'-8" x 23'-8"		MONARCH				RIGHT	13X24X10	B
PER.:	64'	S.A.:	244.94 ft²	VOL.:	0.00 gal.us	DATE: 22/11/2010	APPROVED:	
PER.:	19.51 m	S.A.:	22.76 m²	VOL.:	0.00 liters	DRAWN BY: NM		

STAKE OUT

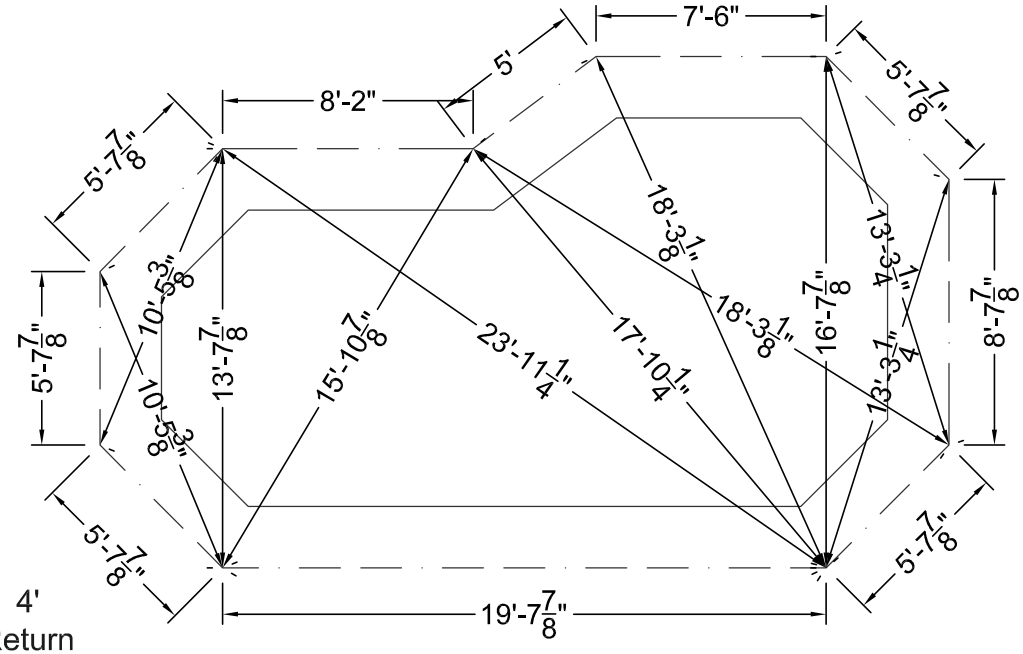

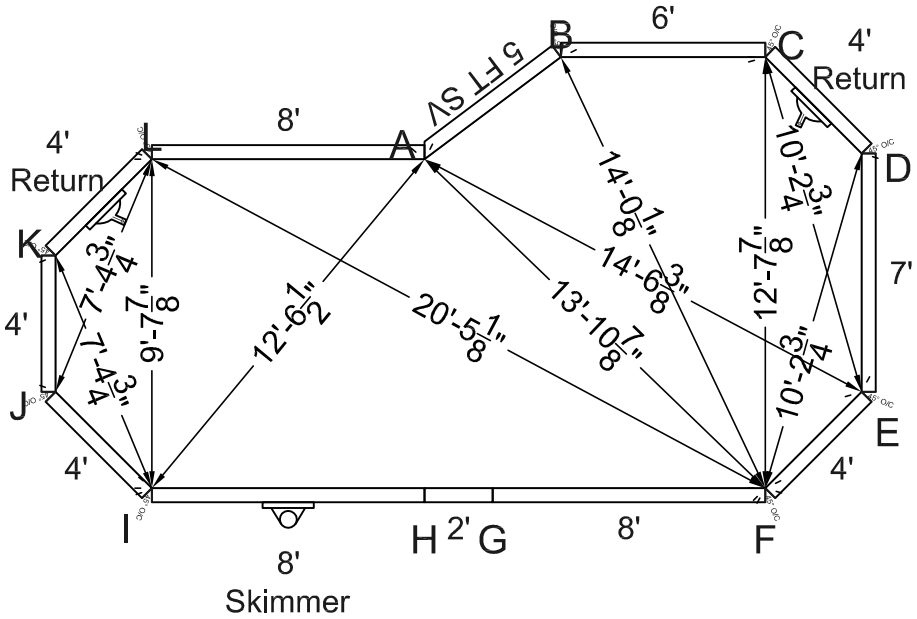

STEEL CHECK

KIT REF# MNT1324RMO-42

MEGNA POOLS
Megna Plastic Packaging Corp.

SIZE:	SHAPE:	HAND:	DWG#	
15'-6" x 32'-6"	MONARCH	LEFT	16X32X13	A

PER.:	84'	S.A.:	412.32 ft²	VOL.:	0.00 gal.us	DATE: 22/11/2010	APPROVED:
PER.:	25.60 m	S.A.:	38.31 m²	VOL.:	0.00 liters	DRAWN BY: NM	

ALL DIMENSIONS ARE FINISHED

MANUFACTURING NOTICE

1- DUE TO UNCERTAIN GROUND VARIANCES POOL WALLS MUST BE INSTALLED A MINIMUM OF 6 INCHES BELOW GRADE
2- BUTTRESS SUPPORTS MUST BE FULLY SUPPORTED INCLUDING SONO TUBES BELOW FROST LEVEL. (4 FEET)
3- 12 INCH CONCRETE COLLAR MINIMUM 24 INCHES PAST STRAIGHT SIDES.
4- FILL REMOVED, TO BE SLOPED AROUND OUTSIDE PERIMETER.

NONCOMPLIANCE VOIDS WARRANTY

5- ALL TOP RAIL POOLS AVAILABLE IN 42" WITH 5" TOP RAIL AND 48" WITH 3" TOP RAIL.

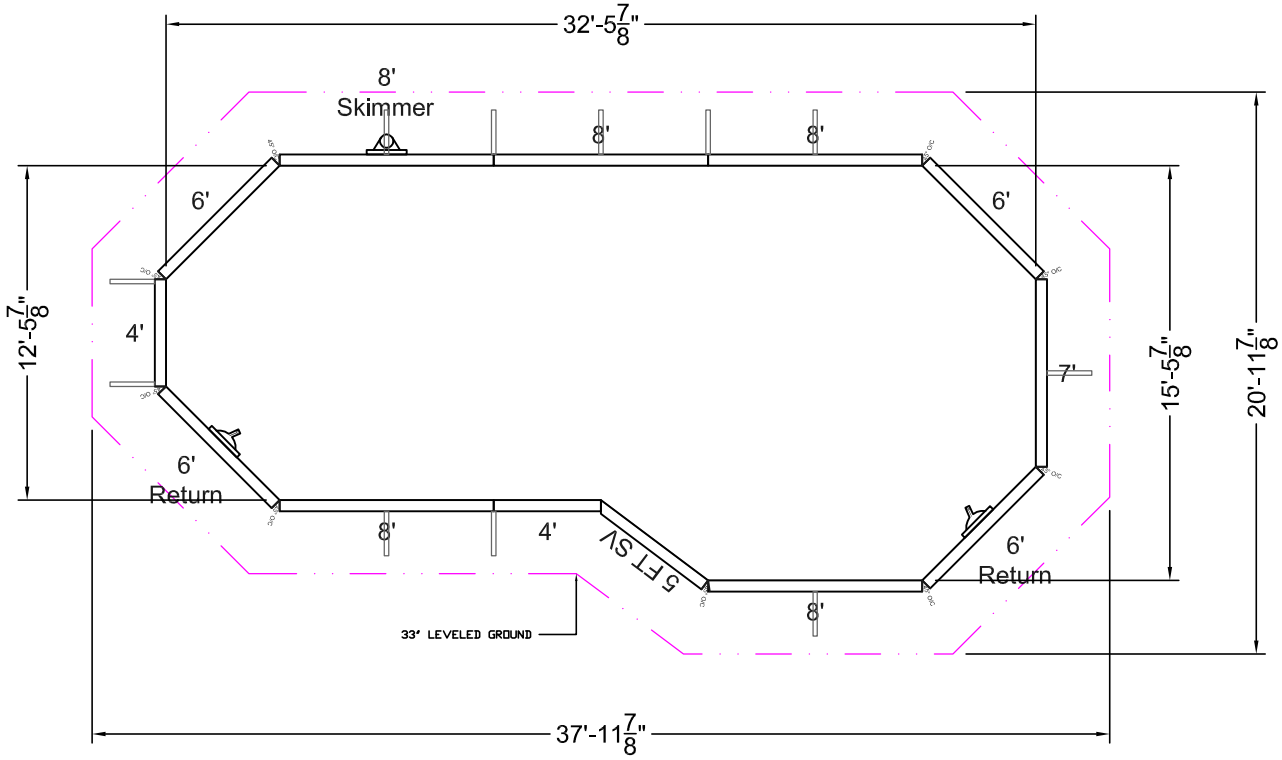

DESCRIPTION	QTY
4' STR	2
6' STR	2
6' STR RTN	2
7' STR	1
8' STR	4
8' STR SKM	1
5 FT SV	1
45° O/C	9
BUTTRESS SUPPORT	11
STD HARDWARE PACK	1

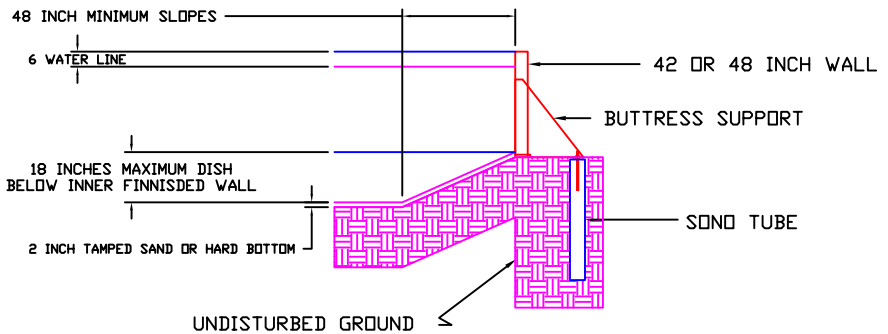

ONGROUND TOP RAIL POOLS

KIT REF# MNT1632LMO-42

MEGNA POOLS

Megna Plastic Packaging Corp.

SIZE:	SHAPE:		HAND:	DWG#	
15'-6" x 32'-6"	MONARCH		LEFT	16X32X13	B
PER.: 84'	S.A.: 412.32 ft²	VOL.: 0.00 gal.us	DATE: 22/11/2010	APPROVED:	
PER.: 25.60 m	S.A.: 38.31 m²	VOL.: 0.00 liters	DRAWN BY: NM		

STAKE OUT

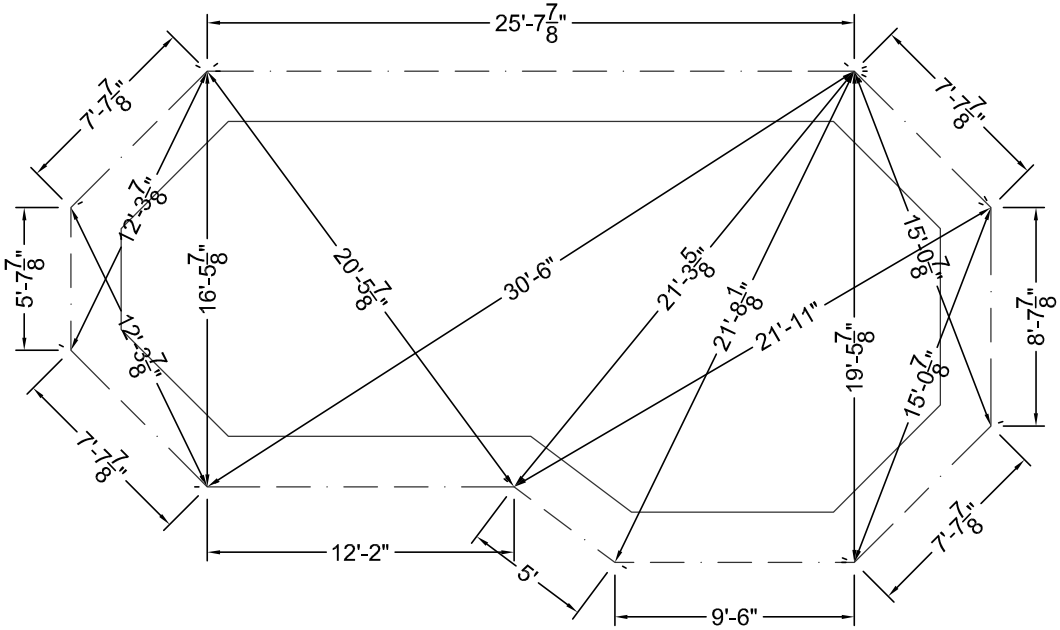

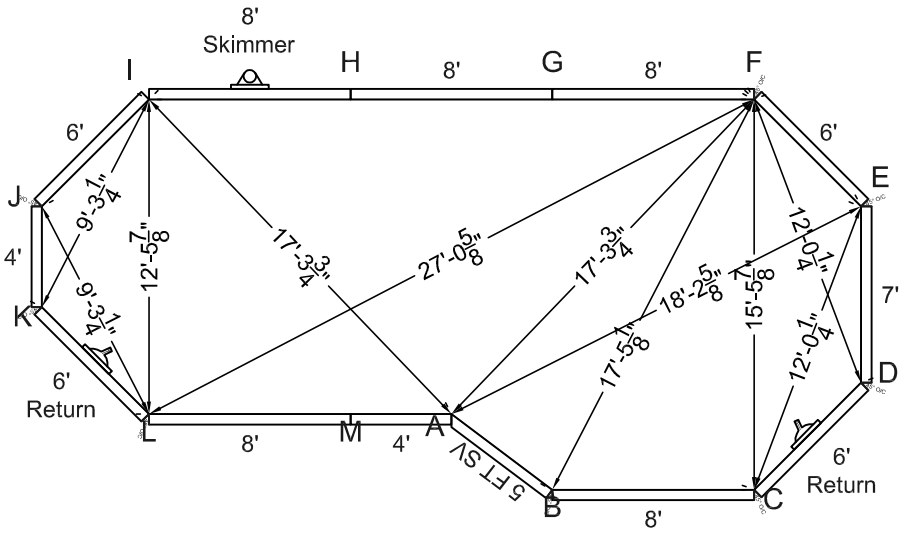

STEEL CHECK

KIT REF# MNT1632LMO-42

MEGNA POOLS

Megna Plastic Packaging Corp.

SIZE:	SHAPE:	HAND:	DWG#	
15'-6" x 32'-6"	MONARCH	RIGHT	16X32X13	A

PER.:	84'	S.A.:	412.32 ft²	VOL.:	0.00 gal.us	DATE: 22/11/2010	APPROVED:
PER.:	25.60 m	S.A.:	38.31 m²	VOL.:	0.00 liters	DRAWN BY: NM	

ALL DIMENSIONS ARE FINISHED

MANUFACTURING NOTICE

1- DUE TO UNCERTAIN GROUND VARIANCES POOL WALLS MUST BE INSTALLED A MINIMUM OF 6 INCHES BELOW GRADE
2- BUTTRESS SUPPORTS MUST BE FULLY SUPPORTED INCLUDING SONO TUBES BELOW FROST LEVEL. (4 FEET)
3- 12 INCH CONCRETE COLLAR MINIMUM 24 INCHES PAST STRAIGHT SIDES.
4- FILL REMOVED, TO BE SLOPED AROUND OUTSIDE PERIMETER.

NONCOMPLIANCE VOIDS WARRANTY

5- ALL TOP RAIL POOLS AVAILABLE IN 42" WITH 5" TOP RAIL AND 48" WITH 3" TOP RAIL.

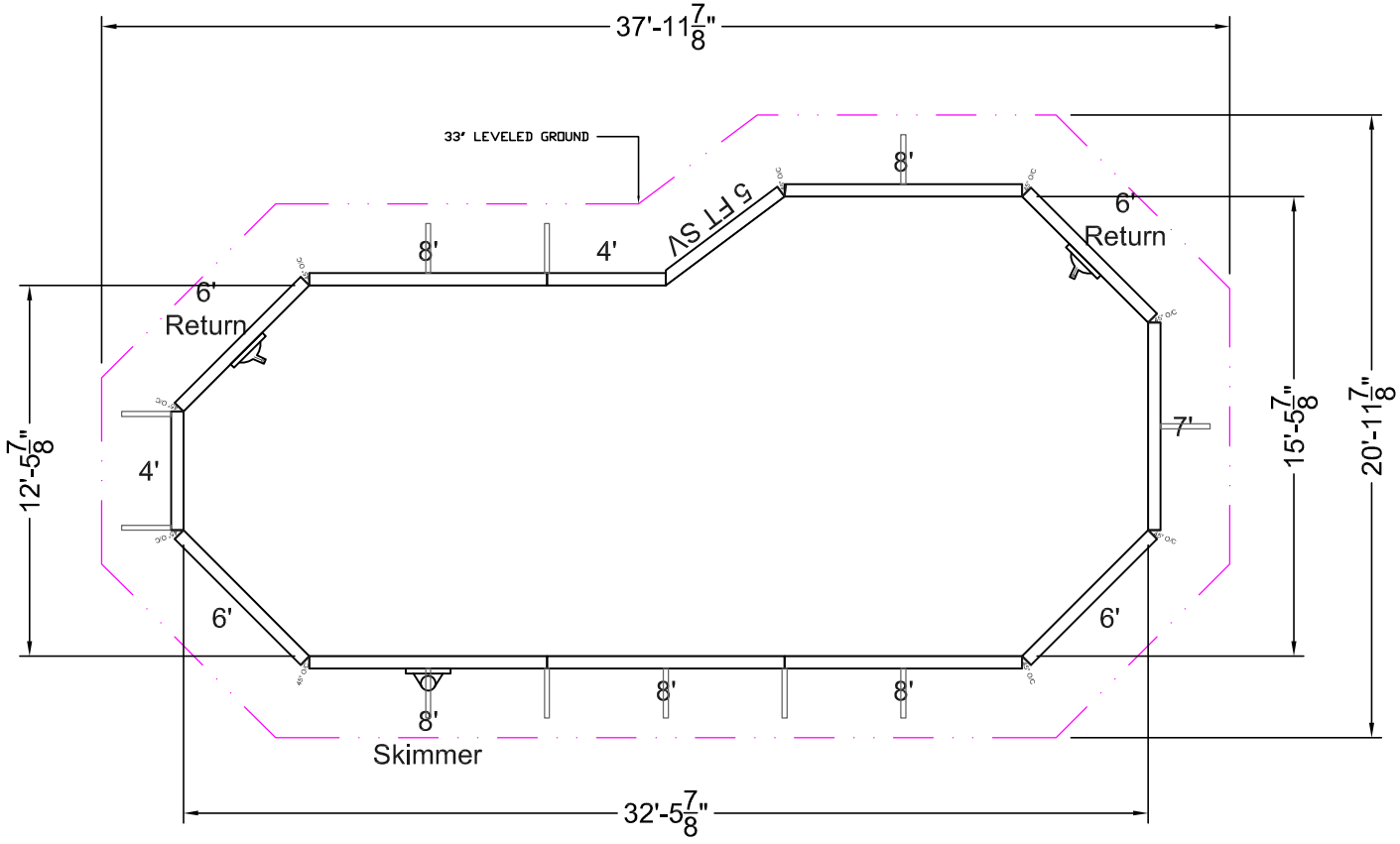

DESCRIPTION	QTY
4' STR	2
6' STR	2
6' STR RTN	2
7' STR	1
8' STR	4
8' STR SKM	1
5 FT SV	1
45° O/C	9
BUTTRESS SUPPORT	11
STD HARDWARE PACK	1

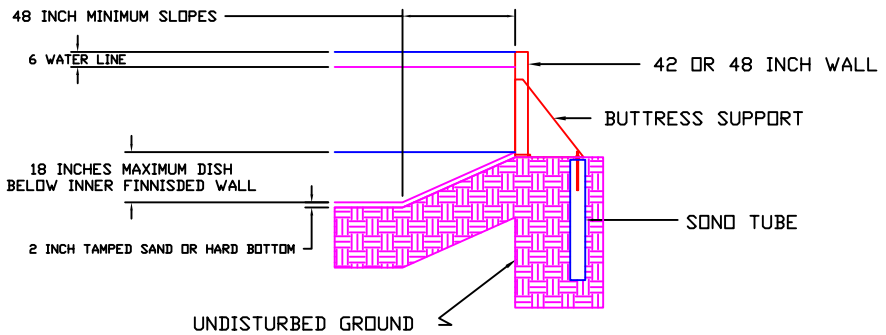

ONGROUND TOP RAIL POOLS

KIT REF# MNT1632RMO-42

MEGNA POOLS

Megna Plastic Packaging Corp.

SIZE:	SHAPE:	HAND:	DWG#	
15'-6" x 32'-6"	MONARCH	RIGHT	16X32X13	B

PER.:	84'	S.A.:	412.32 ft²	VOL.:	0.00 gal.us	DATE: 22/11/2010	APPROVED:
PER.:	25.60 m	S.A.:	38.31 m²	VOL.:	0.00 liters	DRAWN BY: NM	

STAKE OUT

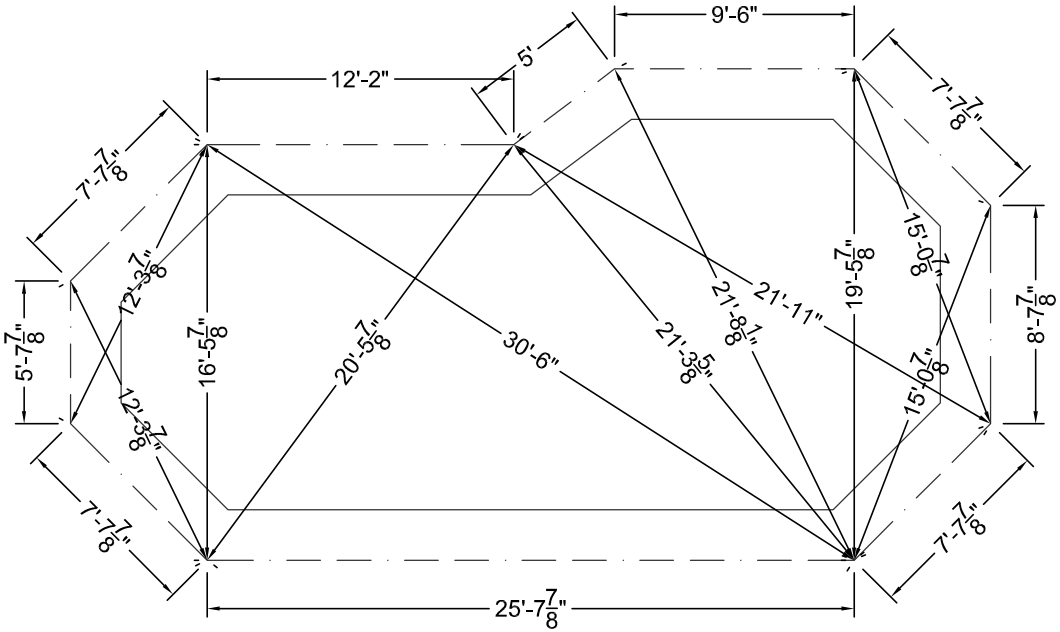

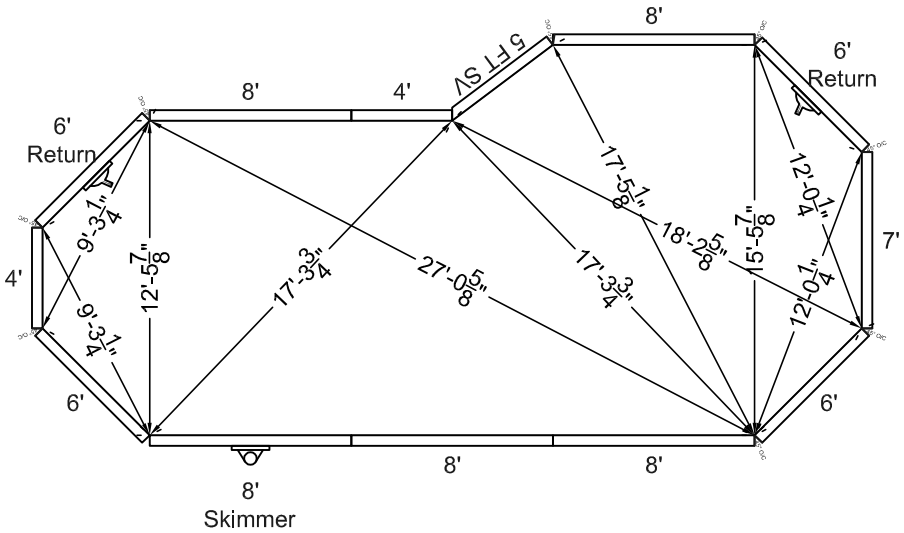

STEEL CHECK

KIT REF# MNT1632RMO-42

MEGNA POOLS

Megna Plastic Packaging Corp.

SIZE:	SHAPE:	HAND:	DWG#	
17'-6" x 32'-6"	MONARCH	LEFT	18X32X15	A

PER.:	88'	S.A.:	477.29 ft²	VOL.:	0.00 gal.us	DATE: 22/11/2010	APPROVED:
PER.:	26.82 m	S.A.:	44.34 m²	VOL.:	0.00 liters	DRAWN BY: NM	

ALL DIMENSIONS ARE FINISHED

MANUFACTURING NOTICE

1- DUE TO UNCERTAIN GROUND VARIANCES POOL WALLS MUST BE INSTALLED A MINIMUM OF 6 INCHES BELOW GRADE
2- BUTTRESS SUPPORTS MUST BE FULLY SUPPORTED INCLUDING SONO TUBES BELOW FROST LEVEL. (4 FEET)
3- 12 INCH CONCRETE COLLAR MINIMUM 24 INCHES PAST STRAIGHT SIDES.
4- FILL REMOVED, TO BE SLOPED AROUND OUTSIDE PERIMETER.

NONCOMPLIANCE VOIDS WARRANTY

5- ALL TOP RAIL POOLS AVAILABLE IN 42" WITH 5" TOP RAIL AND 48" WITH 3" TOP RAIL.

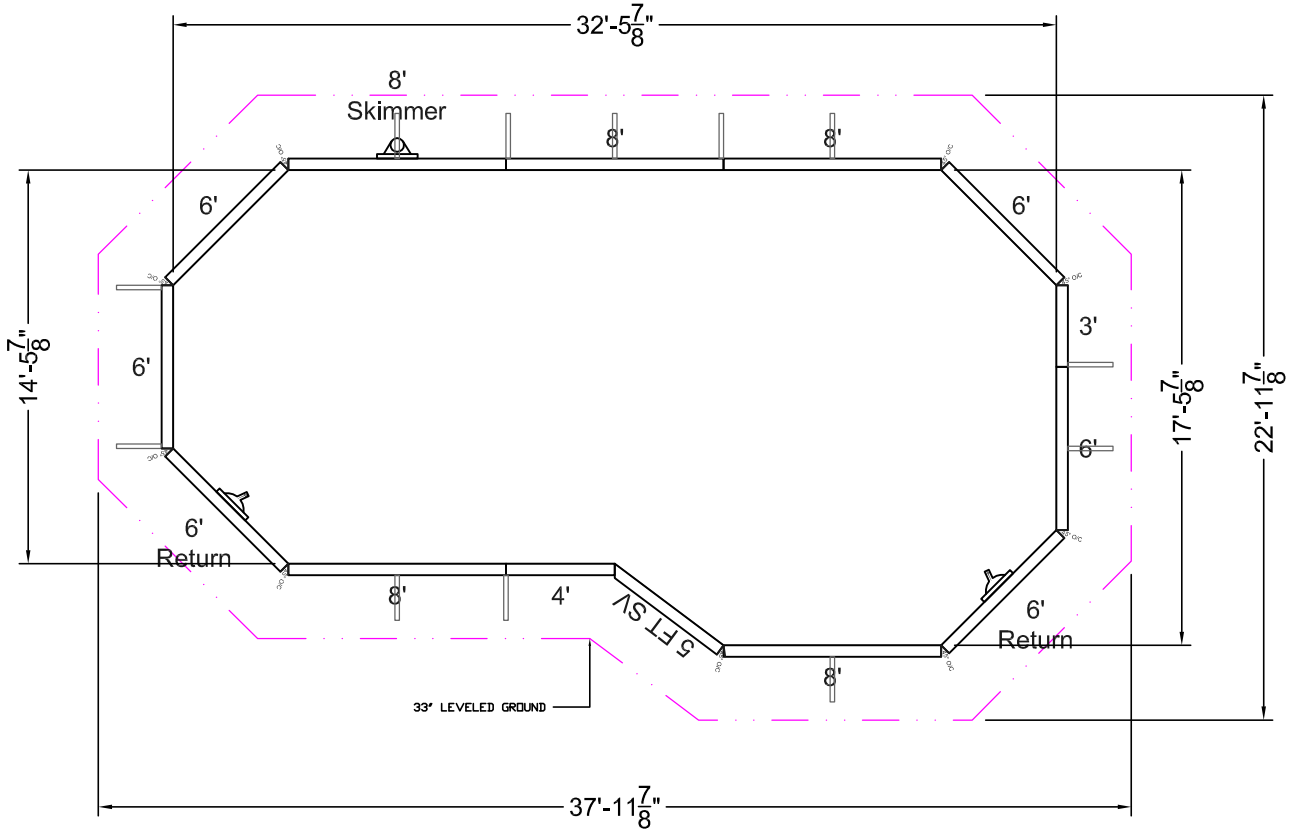

DESCRIPTION	QTY
3' STR	1
4' STR	1
6' STR	4
6' STR RTN	2
8' STR	4
8' STR SKM	1
5 FT SV	1
45° O/C	9
BUTTRESS SUPPORT	12
STD HARDWARE PACK	1

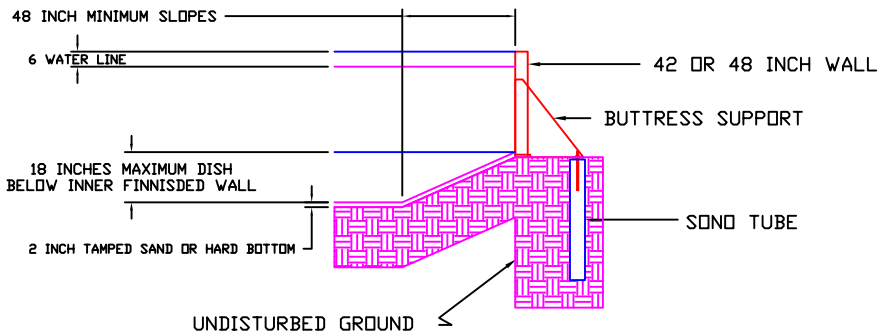

ONGROUND TOP RAIL POOLS

KIT REF# MNT1832LMO-42

MEGNA POOLS

Megna Plastic Packaging Corp.

SIZE:	SHAPE:		HAND:	DWG#	
17'-6" x 32'-6"	MONARCH		LEFT	18X32X15	B
PER.: 88'	S.A.: 477.29 ft²	VOL.: 0.00 gal.us	DATE: 22/11/2010	APPROVED:	
PER.: 26.82 m	S.A.: 44.34 m²	VOL.: 0.00 liters	DRAWN BY: NM		

STAKE OUT

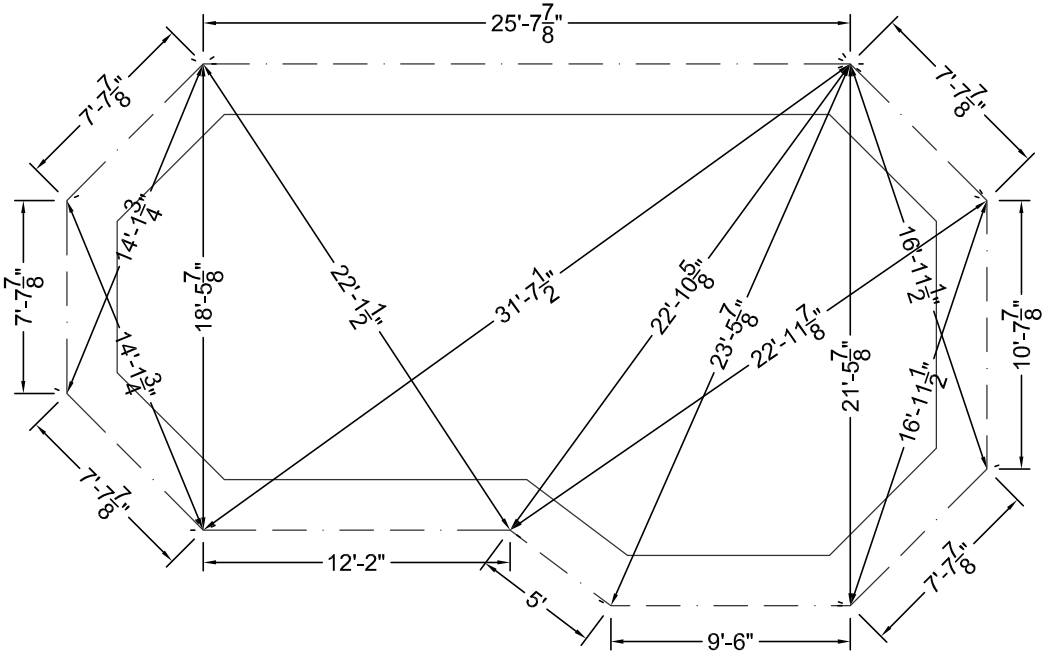

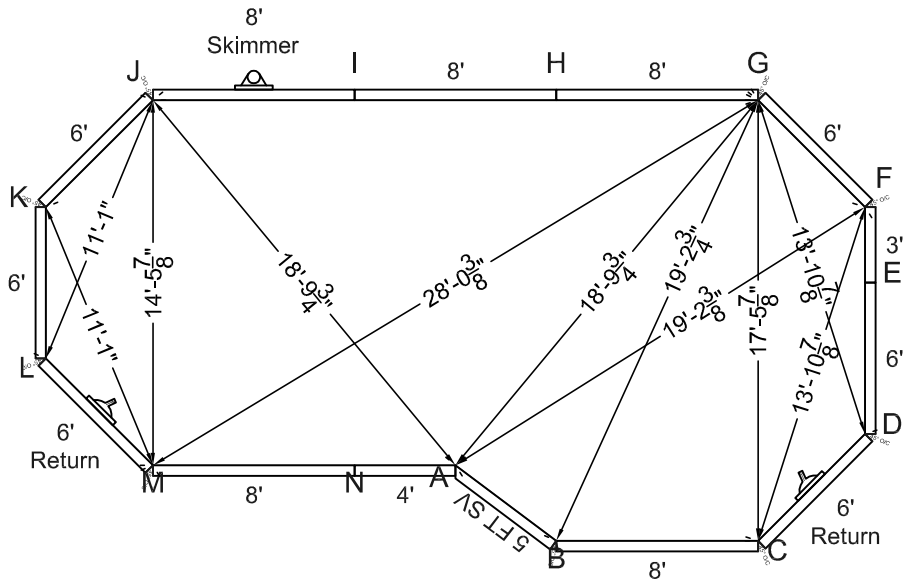

STEEL CHECK

KIT REF# MNT1832LMO-42

MEGNA POOLS
Megna Plastic Packaging Corp.

SIZE:	SHAPE:	HAND:	DWG#	
17'-6" x 32'-6"	MONARCH	RIGHT	18X32X15	A

PER.:	88'	S.A.:	477.29 ft²	VOL.:	0.00 gal.us	DATE: 22/11/2010	APPROVED:
PER.:	26.82 m	S.A.:	44.34 m²	VOL.:	0.00 liters	DRAWN BY: NM	

ALL DIMENSIONS ARE FINISHED

MANUFACTURING NOTICE

1- DUE TO UNCERTAIN GROUND VARIANCES POOL WALLS MUST BE INSTALLED A MINIMUM OF 6 INCHES BELOW GRADE
2- BUTTRESS SUPPORTS MUST BE FULLY SUPPORTED INCLUDING SONO TUBES BELOW FROST LEVEL. (4 FEET)
3- 12 INCH CONCRETE COLLAR MINIMUM 24 INCHES PAST STRAIGHT SIDES.
4- FILL REMOVED, TO BE SLOPED AROUND OUTSIDE PERIMETER.

NONCOMPLIANCE VOIDS WARRANTY

5- ALL TOP RAIL POOLS AVAILABLE IN 42" WITH 5" TOP RAIL AND 48" WITH 3" TOP RAIL.

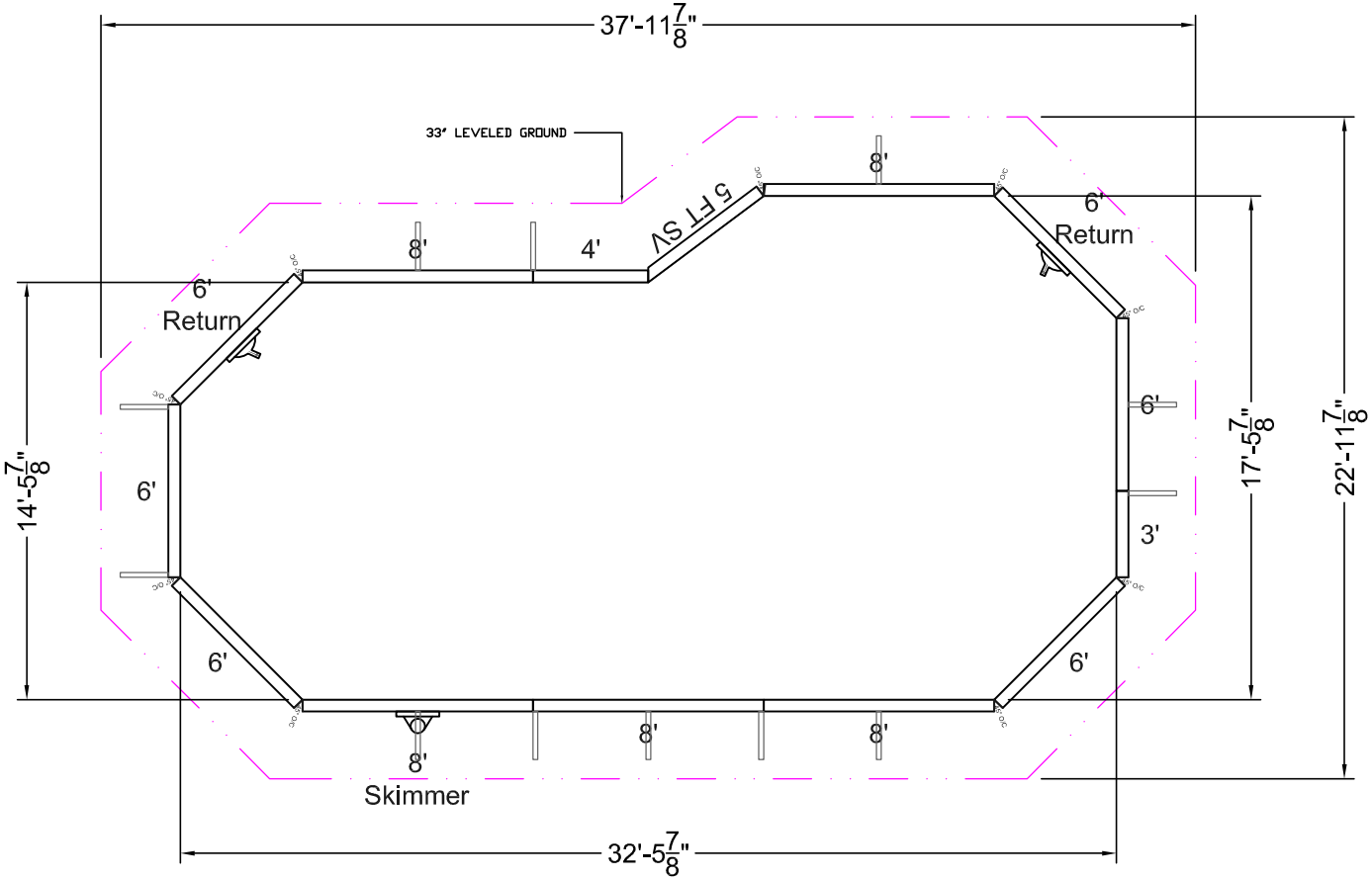

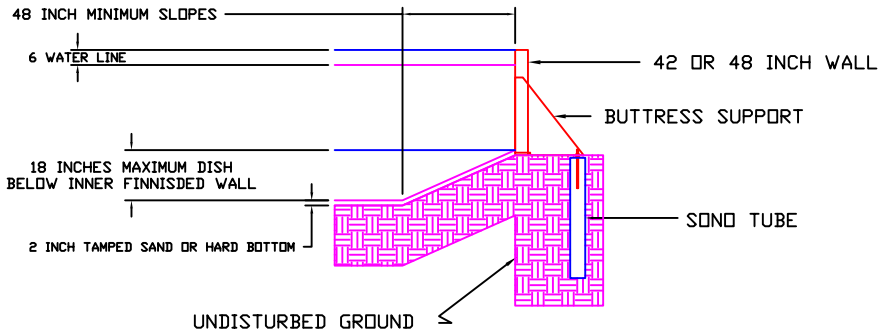

DESCRIPTION	QTY
3' STR	1
4' STR	1
6' STR	4
6' STR RTN	2
8' STR	4
8' STR SKM	1
5 FT SV	1
45° O/C	9
BUTTRESS SUPPORT	12
STD HARDWARE PACK	1

ONGROUND TOP RAIL POOLS

KIT REF# MNT1832RMO-42

MEGNA POOLS
Megna Plastic Packaging Corp.

SIZE: 17'-6" x 32'-6"		SHAPE: MONARCH				HAND: RIGHT	DWG# 18X32X15 B
PER.:	88'	S.A.:	477.29 ft²	VOL.:	0.00 gal.us	DATE: 22/11/2010	APPROVED:
PER.:	26.82 m	S.A.:	44.34 m²	VOL.:	0.00 liters	DRAWN BY: NM	

STAKE OUT

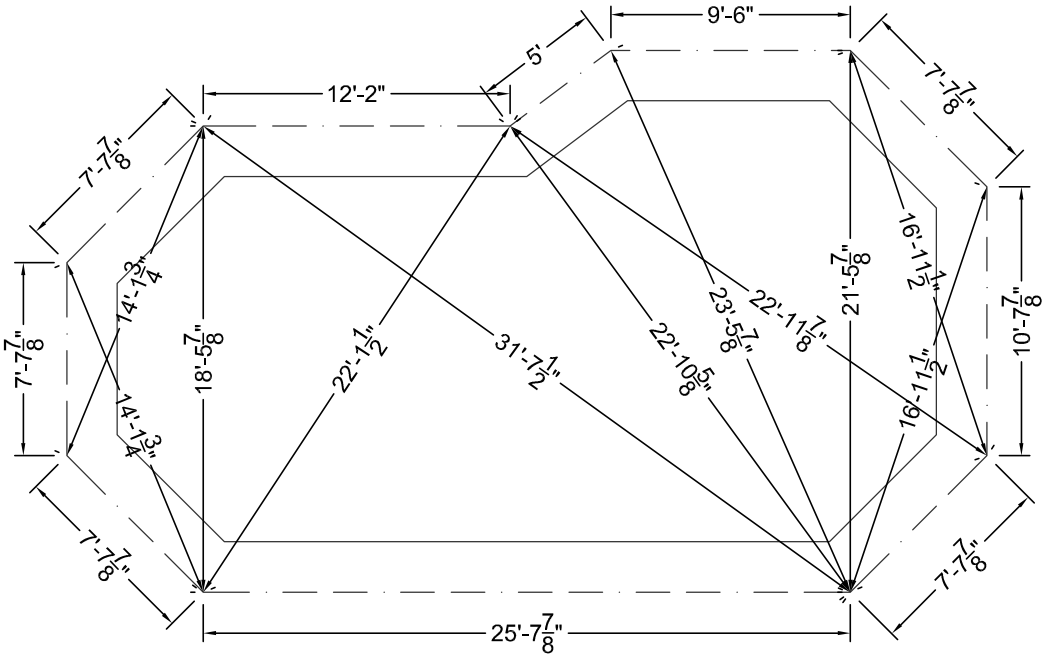

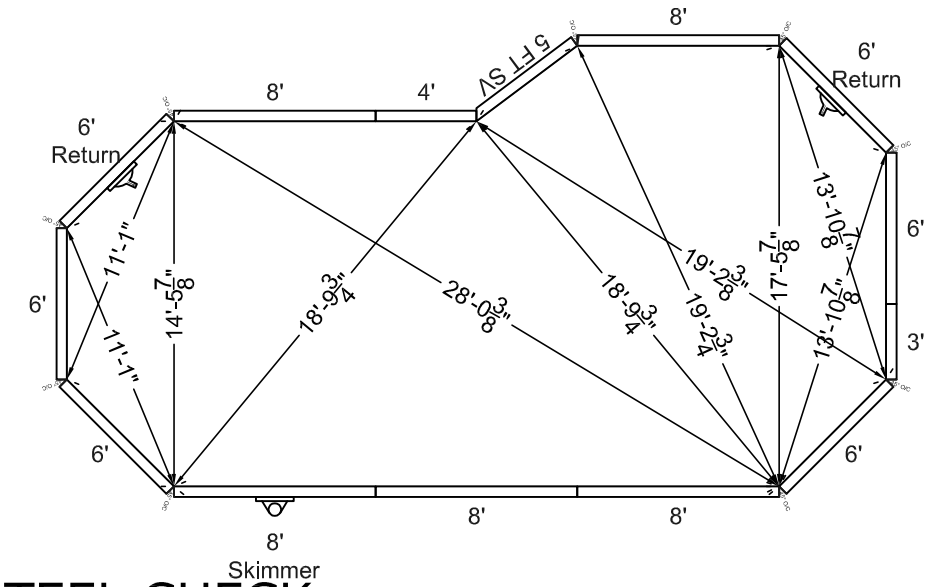

STEEL CHECK

KIT REF# MNT1832RMO-42

MEGNA POOLS

Megna Plastic Packaging Corp.

SIZE:	SHAPE:	HAND:	DWG#	
17'-6" x 36'-6"	MONARCH	LEFT	18X36X15	A

PER.:	96'	S.A.:	535.23 ft²	VOL.:	0.00 gal.us	DATE: 22/11/2010	APPROVED:
PER.:	29.26 m	S.A.:	49.72 m²	VOL.:	0.00 liters	DRAWN BY: NM	

ALL DIMENSIONS ARE FINISHED

MANUFACTURING NOTICE

1- DUE TO UNCERTAIN GROUND VARIANCES POOL WALLS MUST BE INSTALLED A MINIMUM OF 6 INCHES BELOW GRADE
2- BUTTRESS SUPPORTS MUST BE FULLY SUPPORTED INCLUDING SONO TUBES BELOW FROST LEVEL. (4 FEET)
3- 12 INCH CONCRETE COLLAR MINIMUM 24 INCHES PAST STRAIGHT SIDES.
4- FILL REMOVED, TO BE SLOPED AROUND OUTSIDE PERIMETER.

NONCOMPLIANCE VOIDS WARRANTY

5- ALL TOP RAIL POOLS AVAILABLE IN 42" WITH 5" TOP RAIL AND 48" WITH 3" TOP RAIL.

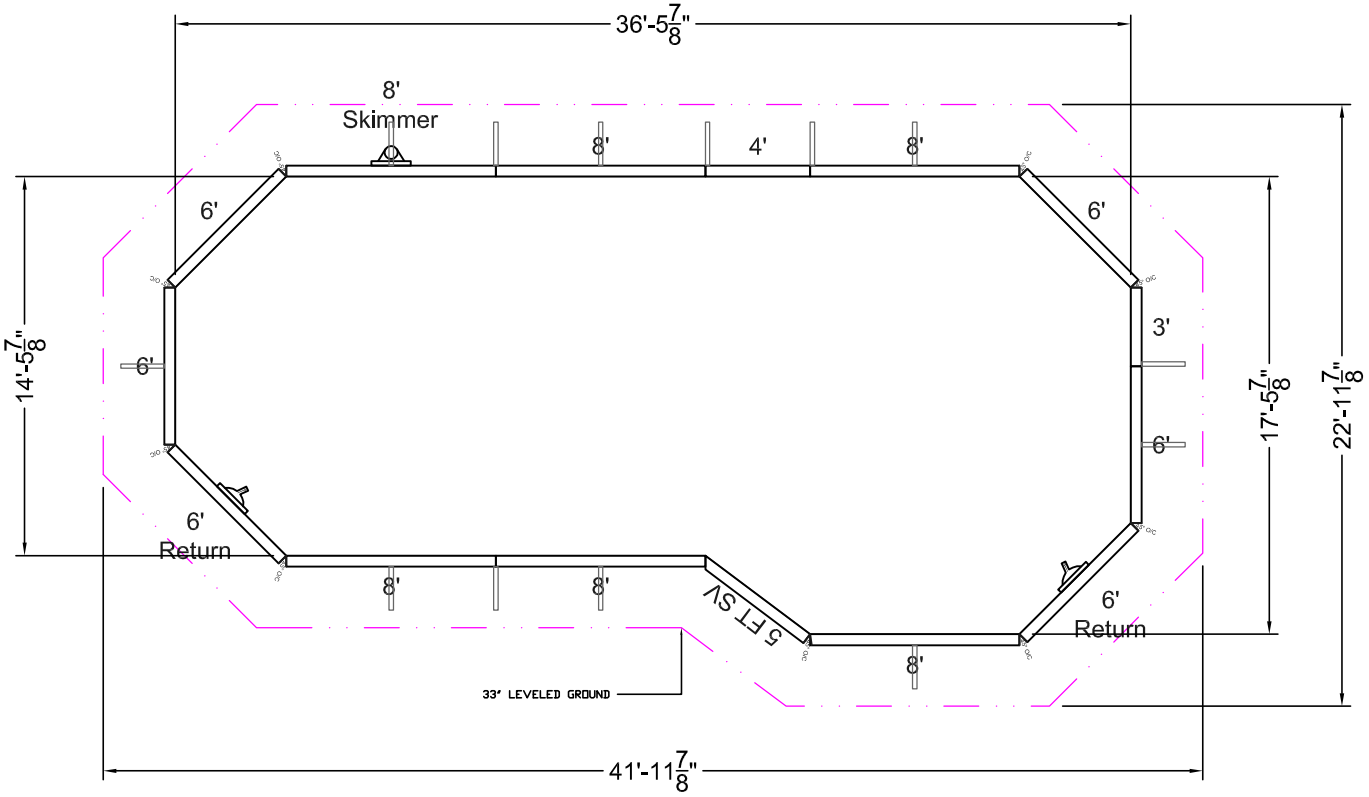

DESCRIPTION	QTY
3' STR	1
4' STR	1
6' STR	4
6' STR RTN	2
8' STR	5
8' STR SKM	1
5 FT SV	1
45° O/C	9
BUTTRESS SUPPORT	13
STD HARDWARE PACK	1

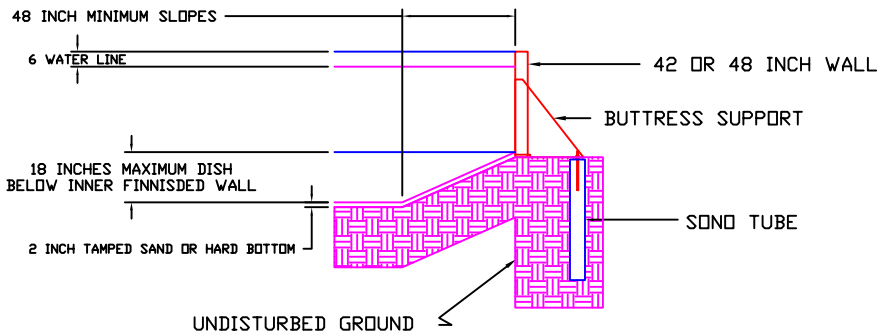

ONGROUND TOP RAIL POOLS

KIT REF# MNT1836LMO-42

MEGNA POOLS
Megna Plastic Packaging Corp.

SIZE:	SHAPE:	HAND:	DWG#	
17'-6" x 36'-6"	MONARCH	LEFT	18X36X15	B

PER.:	96'	S.A.:	535.23 ft²	VOL.:	0.00 gal.us	DATE: 22/11/2010	APPROVED:
PER.:	29.26 m	S.A.:	49.72 m²	VOL.:	0.00 liters	DRAWN BY: NM	

STAKE OUT

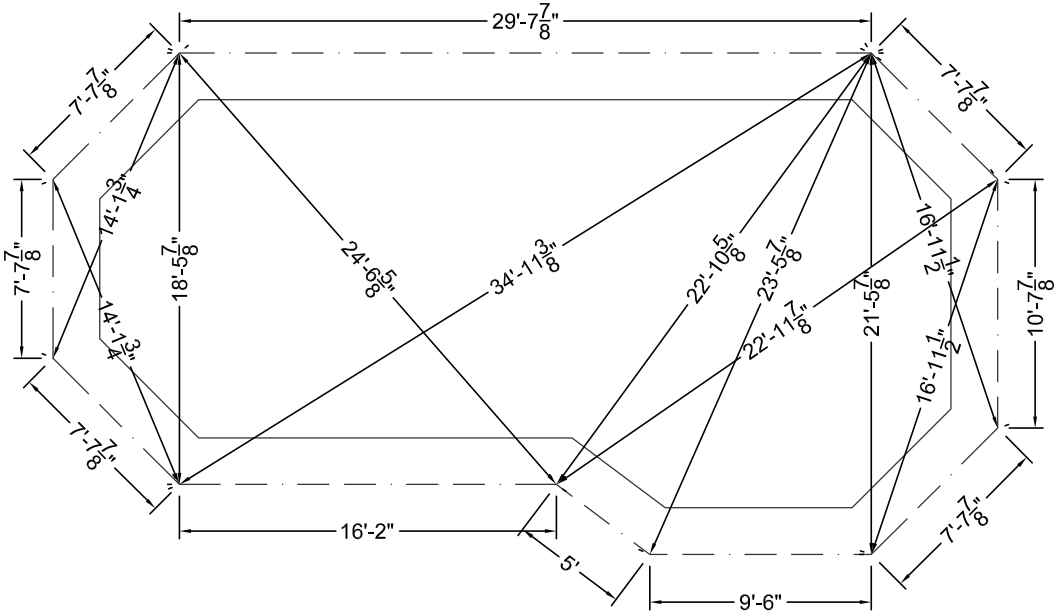

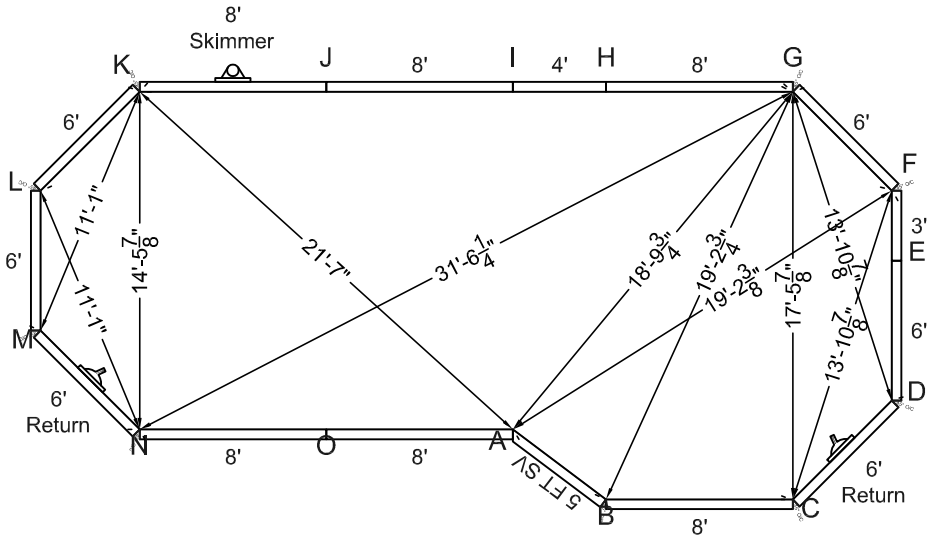

STEEL CHECK

KIT REF# MNT1836LMO-42

MEGNA POOLS

Megna Plastic Packaging Corp.

SIZE:	SHAPE:	HAND:	DWG#	
17'-6" x 36'-6"	MONARCH	RIGHT	18X36X15	A

PER.:	96'	S.A.:	535.23 ft²	VOL.:	0.00 gal.us	DATE: 22/11/2010
PER.:	29.26 m	S.A.:	49.72 m²	VOL.:	0.00 liters	DRAWN BY: NM

APPROVED:

ALL DIMENSIONS ARE FINISHED

MANUFACTURING NOTICE

1- DUE TO UNCERTAIN GROUND VARIANCES POOL WALLS MUST BE INSTALLED A MINIMUM OF 6 INCHES BELOW GRADE
2- BUTTRESS SUPPORTS MUST BE FULLY SUPPORTED INCLUDING SONO TUBES BELOW FROST LEVEL. (4 FEET)
3- 12 INCH CONCRETE COLLAR MINIMUM 24 INCHES PAST STRAIGHT SIDES.
4- FILL REMOVED, TO BE SLOPED AROUND OUTSIDE PERIMETER.

NONCOMPLIANCE VOIDS WARRANTY

5- ALL TOP RAIL POOLS AVAILABLE IN 42" WITH 5" TOP RAIL AND 48" WITH 3" TOP RAIL.

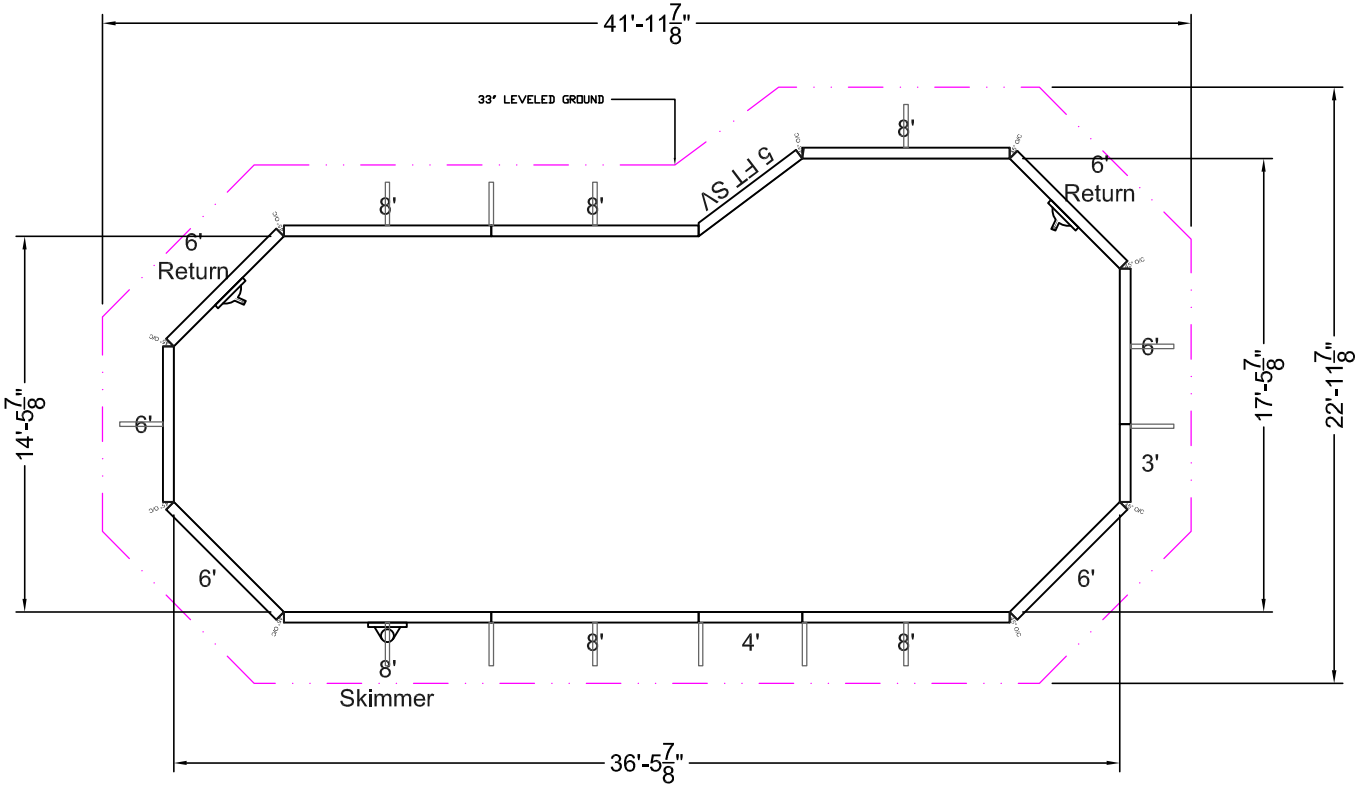

DESCRIPTION	QTY
3' STR	1
4' STR	1
6' STR	4
6' STR RTN	2
8' STR	5
8' STR SKM	1
5 FT SV	1
45° O/C	9
BUTTRESS SUPPORT	13
STD HARDWARE PACK	1

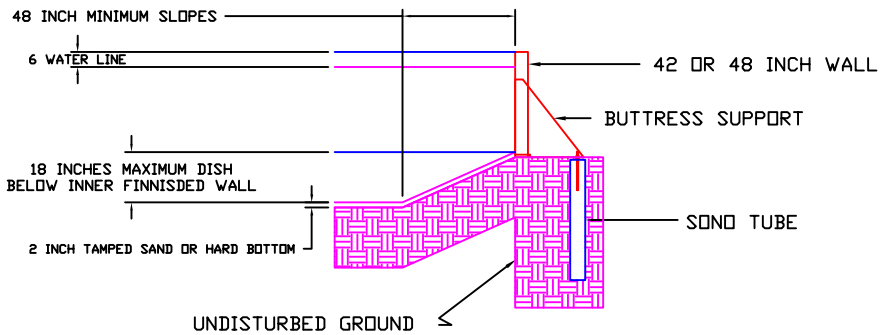

ONGROUND TOP RAIL POOLS

KIT REF# MNT1836RMO-42

MEGNA POOLS

Megna Plastic Packaging Corp.

SIZE:		SHAPE:			HAND:	DWG#	
17'-6" x 36'-6"		MONARCH			RIGHT	18X36X15	B
PER.:	96'	S.A.:	535.23 ft²	VOL.: 0.00 gal.us	DATE: 22/11/2010	APPROVED:	
PER.:	29.26 m	S.A.:	49.72 m²	VOL.: 0.00 liters	DRAWN BY: NM		

STAKE OUT

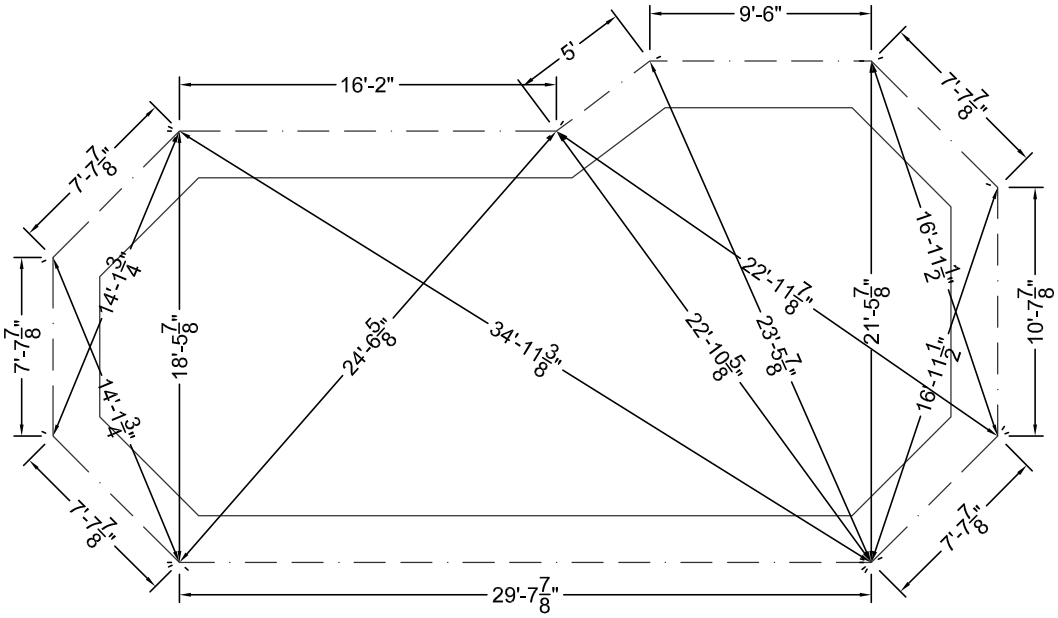

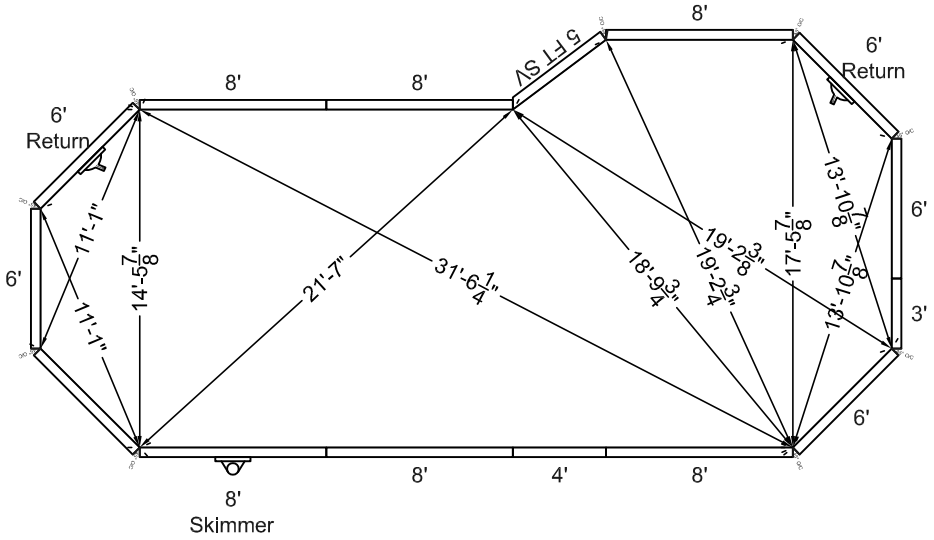

STEEL CHECK

KIT REF# MNT1836RMO-42

MEGNA POOLS

Megna Plastic Packaging Corp.

SIZE:	SHAPE:	HAND:	DWG#	
19'-6" x 38'-6"	MONARCH	LEFT	20X38X17	A

PER.:	104'	S.A.:	647.17 ft²	VOL.:	0.00 gal.us	DATE: 22/11/2010	APPROVED:
PER.:	31.70 m	S.A.:	60.12 m²	VOL.:	0.00 liters	DRAWN BY: NM	

ALL DIMENSIONS ARE FINISHED

MANUFACTURING NOTICE

1- DUE TO UNCERTAIN GROUND VARIANCES POOL WALLS MUST BE INSTALLED A MINIMUM OF 6 INCHES BELOW GRADE
2- BUTTRESS SUPPORTS MUST BE FULLY SUPPORTED INCLUDING SONO TUBES BELOW FROST LEVEL. (4 FEET)
3- 12 INCH CONCRETE COLLAR MINIMUM 24 INCHES PAST STRAIGHT SIDES.
4- FILL REMOVED, TO BE SLOPED AROUND OUTSIDE PERIMETER.

NONCOMPLIANCE VOIDS WARRANTY

5- ALL TOP RAIL POOLS AVAILABLE IN 42" WITH 5" TOP RAIL AND 48" WITH 3" TOP RAIL.

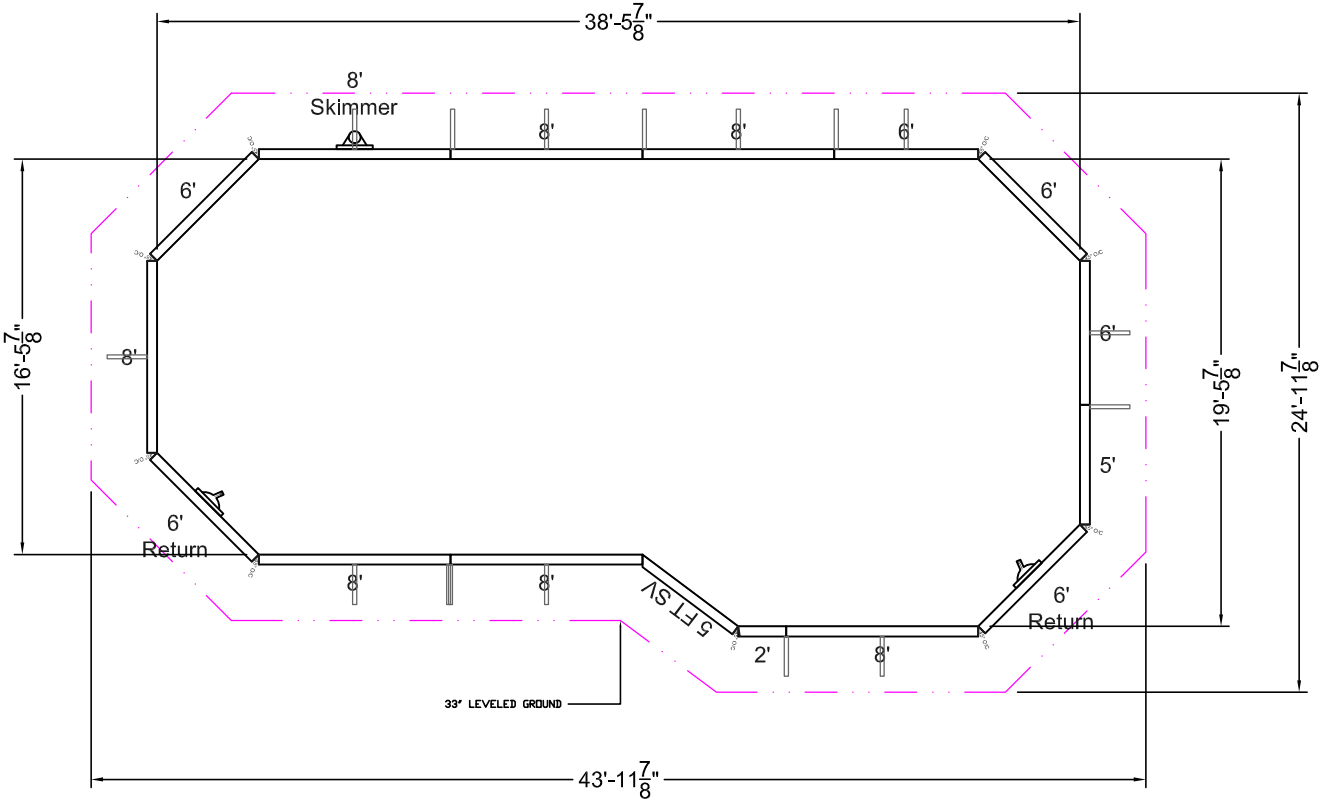

DESCRIPTION	QTY
2' STR	1
5' STR	1
6' STR	4
6' STR RTN	2
8' STR	6
8' STR SKM	1
5 FT SV	1
45° O/C	9
BUTTRESS SUPPORT	15
STD HARDWARE PACK	1

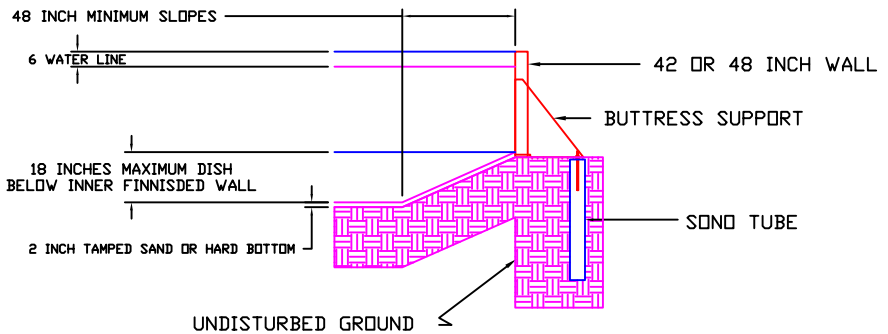

ONGROUND TOP RAIL POOLS

KIT REF# MNT2038LMO-42

MEGNA POOLS

Megna Plastic Packaging Corp.

SIZE:	SHAPE:	HAND:	DWG#	
19'-6" x 38'-6"	MONARCH	LEFT	20X38X17	B

PER.:	104'	S.A.:	647.17 ft²	VOL.:	0.00 gal.us	DATE: 22/11/2010	APPROVED:
PER.:	31.70 m	S.A.:	60.12 m²	VOL.:	0.00 liters	DRAWN BY: NM	

STAKE OUT

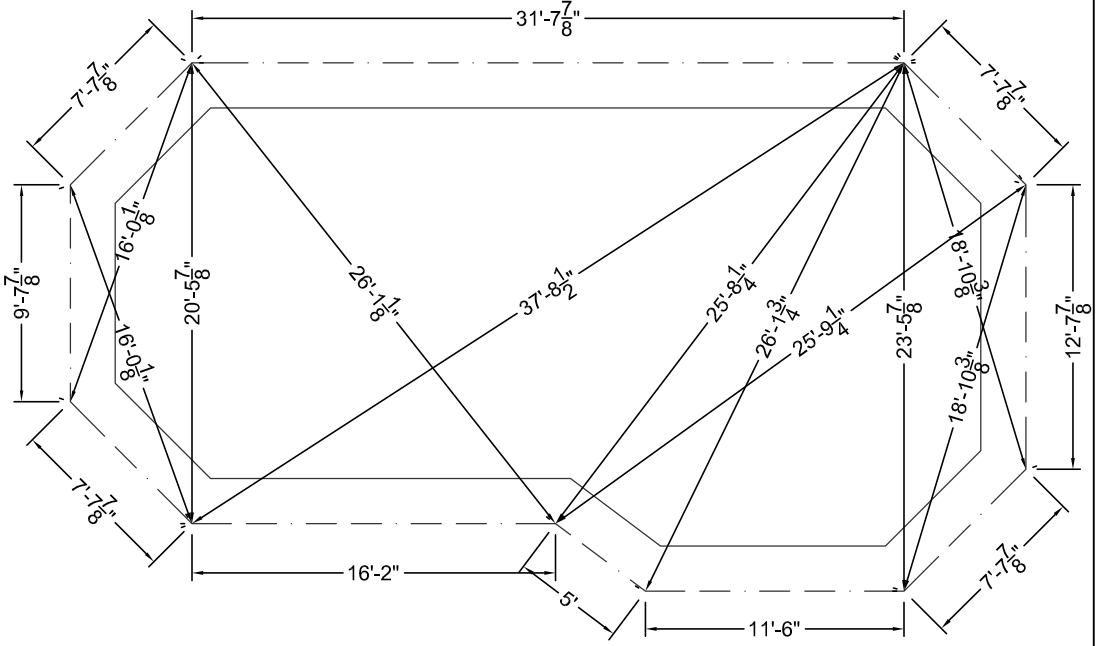

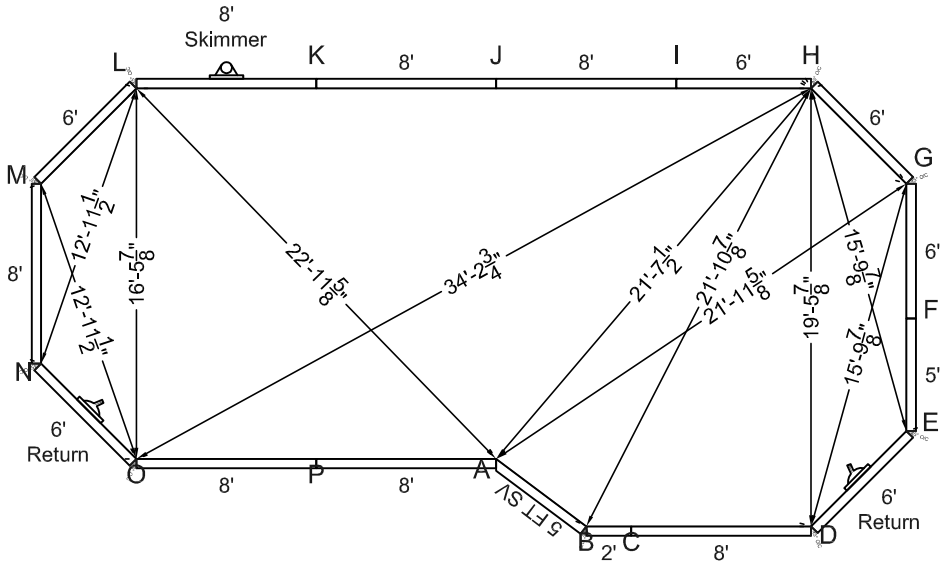

STEEL CHECK

KIT REF# MNT2038LMO-42

MEGNA POOLS

Megna Plastic Packaging Corp.

SIZE:	SHAPE:	HAND:	DWG#	
19'-6" x 38'-6"	MONARCH	RIGHT	20X38X17	A

PER.:	104'	S.A.:	647.17 ft²	VOL.:	0.00 gal.us	DATE: 22/11/2010
PER.:	31.70 m	S.A.:	60.12 m²	VOL.:	0.00 liters	DRAWN BY: NM

APPROVED:

ALL DIMENSIONS ARE FINISHED

MANUFACTURING NOTICE

1- DUE TO UNCERTAIN GROUND VARIANCES POOL WALLS MUST BE INSTALLED A MINIMUM OF 6 INCHES BELOW GRADE
2- BUTTRESS SUPPORTS MUST BE FULLY SUPPORTED INCLUDING SONO TUBES BELOW FROST LEVEL. (4 FEET)
3- 12 INCH CONCRETE COLLAR MINIMUM 24 INCHES PAST STRAIGHT SIDES.
4- FILL REMOVED, TO BE SLOPED AROUND OUTSIDE PERIMETER.

NONCOMPLIANCE VOIDS WARRANTY

5- ALL TOP RAIL POOLS AVAILABLE IN 42" WITH 5" TOP RAIL AND 48" WITH 3" TOP RAIL.

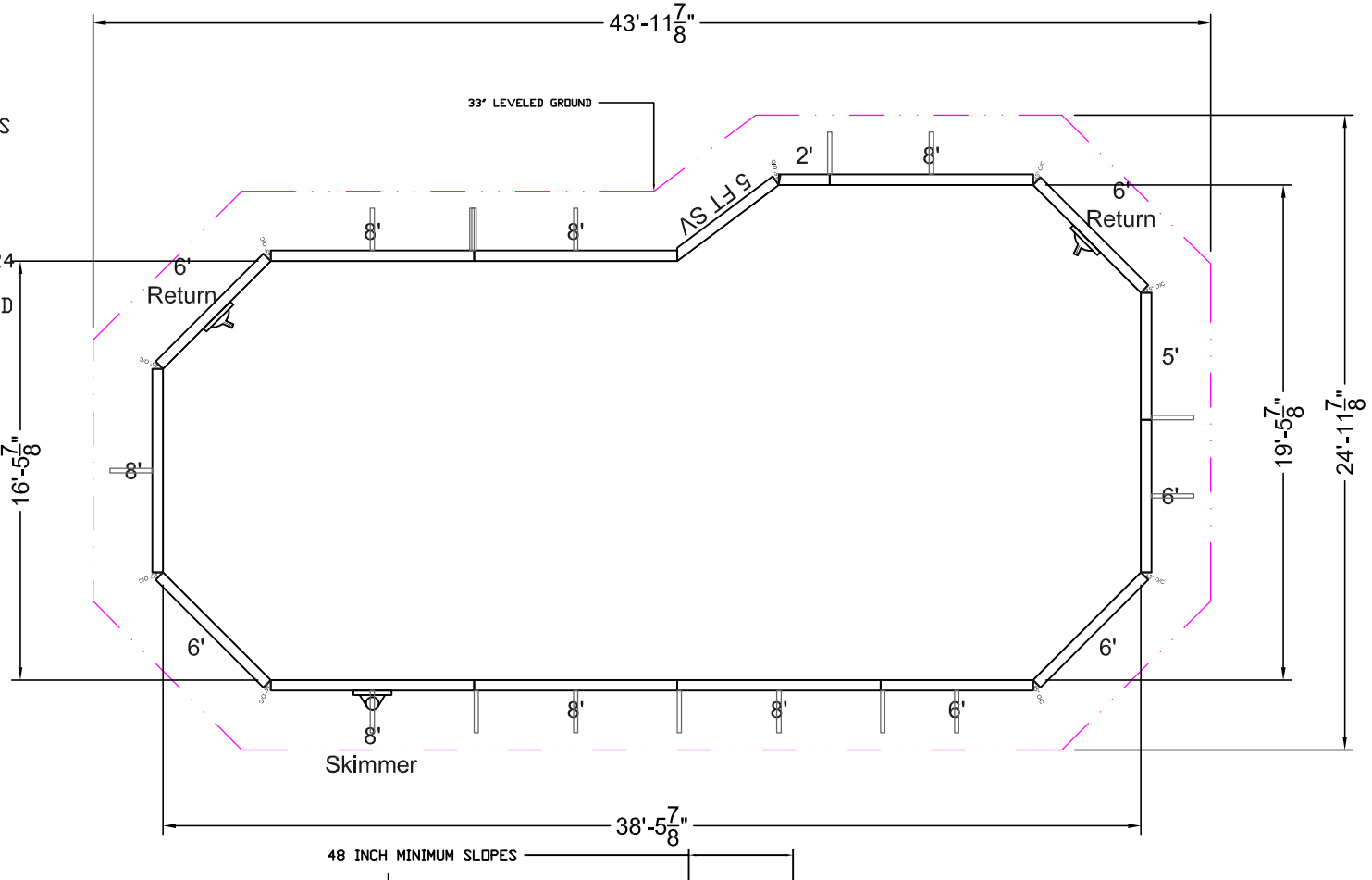

DESCRIPTION	QTY
2' STR	1
5' STR	1
6' STR	4
6' STR RTN	2
8' STR	6
8' STR SKM	1
5 FT SV	1
45° O/C	9
BUTTRESS SUPPORT	15
STD HARDWARE PACK	1

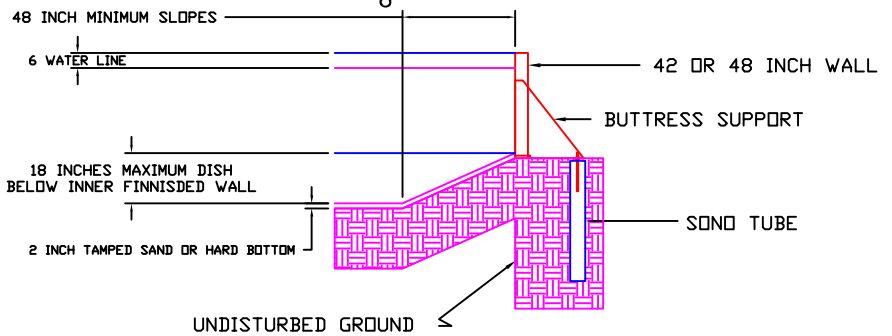

ONGROUND TOP RAIL POOLS

KIT REF# MNT2038RMO-42

MEGNA POOLS

Megna Plastic Packaging Corp.

SIZE: 19'-6" x 38'-6"		SHAPE: MONARCH				HAND: RIGHT	DWG# 20X38X17 B
PER.:	104'	S.A.:	647.17 ft²	VOL.:	0.00 gal.us	DATE: 22/11/2010	APPROVED:
PER.:	31.70 m	S.A.:	60.12 m²	VOL.:	0.00 liters	DRAWN BY: NM	

STAKE OUT

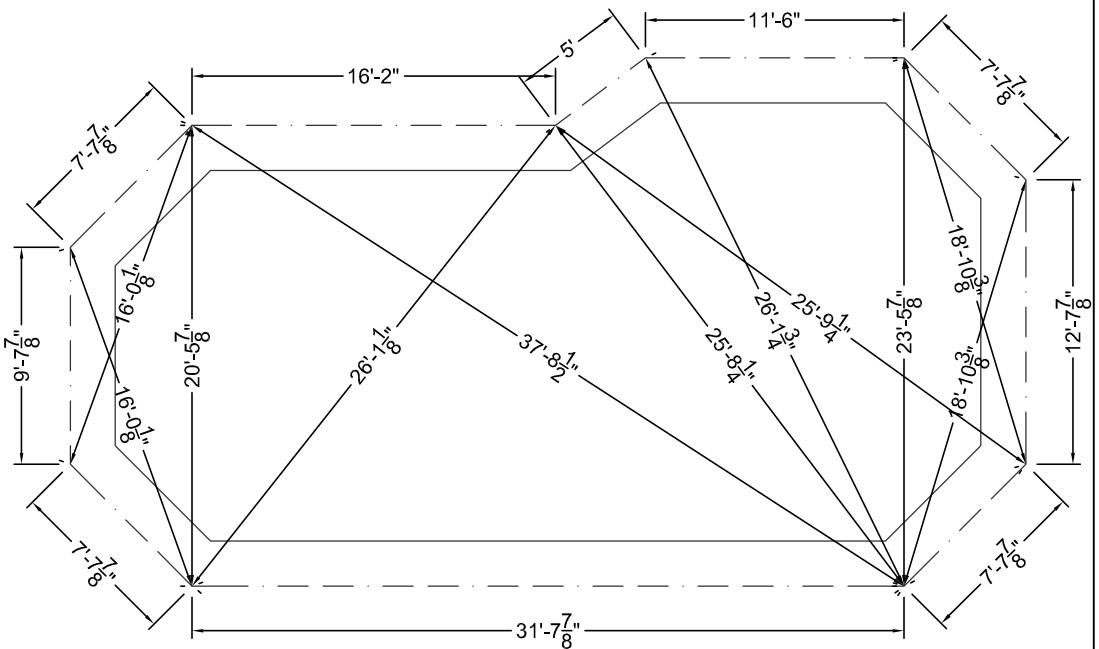

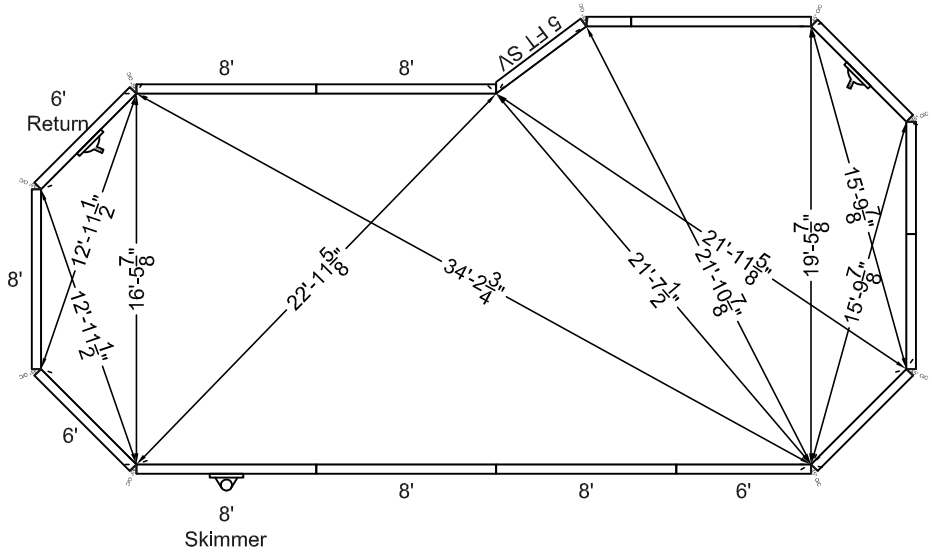

STEEL CHECK

KIT REF# MNT2038RMO-42

MEGNA POOLS

Megna Plastic Packaging Corp.

SIZE:	SHAPE:	HAND:	DWG#	
21'-6" x 40'-6"	MONARCH	LEFT	22X40X19	A

PER.:	112'	S.A.:	767.11 ft²	VOL.:	0.00 gal.us	DATE: 16/12/2010	APPROVED:
PER.:	34.14 m	S.A.:	71.27 m²	VOL.:	0.00 liters	DRAWN BY: NM	

ALL DIMENSIONS ARE FINISHED

MANUFACTURING NOTICE

1- DUE TO UNCERTAIN GROUND VARIANCES POOL WALLS MUST BE INSTALLED A MINIMUM OF 6 INCHES BELOW GRADE
2- BUTTRESS SUPPORTS MUST BE FULLY SUPPORTED INCLUDING SONO TUBES BELOW FROST LEVEL. (4 FEET)
3- 12 INCH CONCRETE COLLAR MINIMUM 24 INCHES PAST STRAIGHT SIDES.
4- FILL REMOVED, TO BE SLOPED AROUND OUTSIDE PERIMETER.

NONCOMPLIANCE VOIDS WARRANTY

5- ALL TOP RAIL POOLS AVAILABLE IN 42" WITH 5" TOP RAIL AND 48" WITH 3" TOP RAIL.

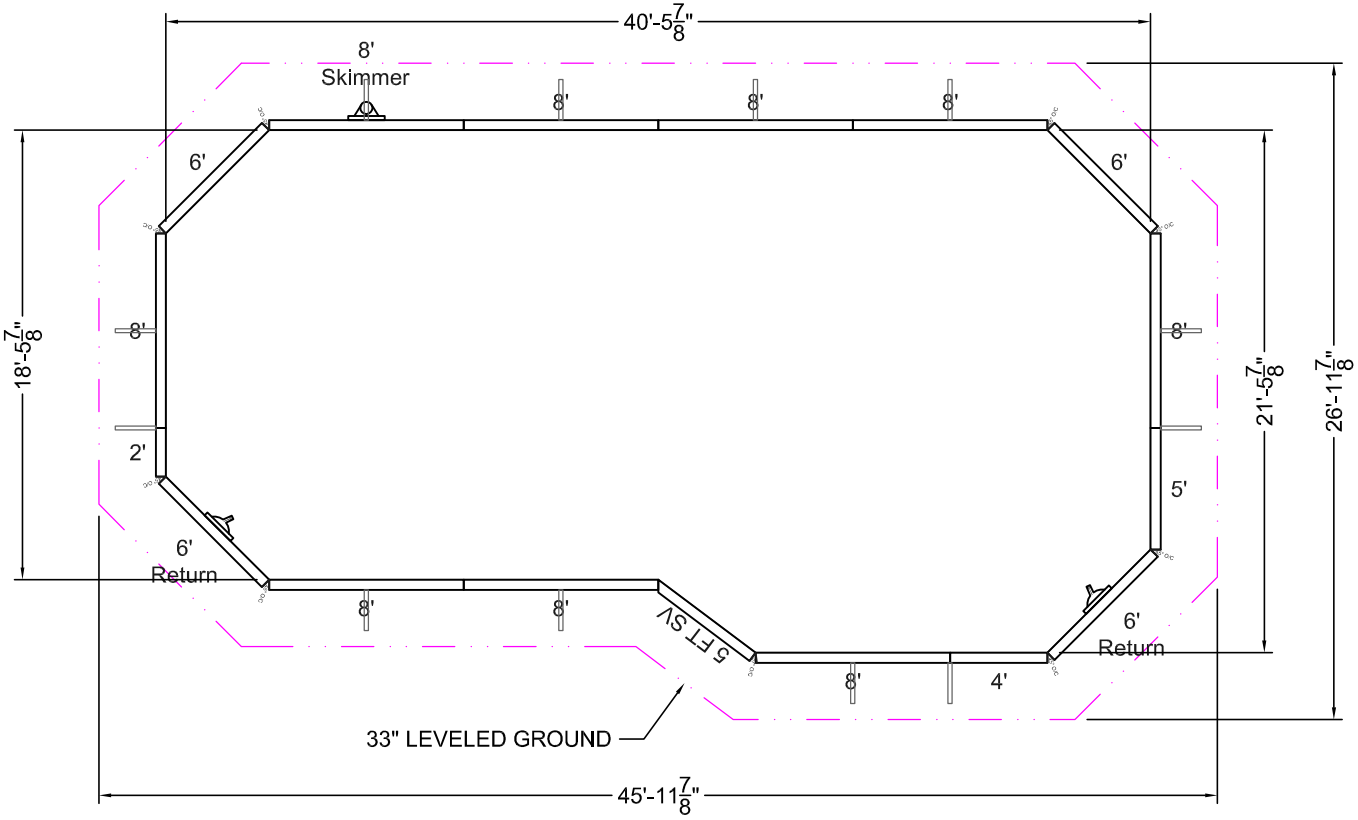

DESCRIPTION	QTY
2' STR	1
4' STR	1
5' STR	1
6' STR	2
6' STR RTN	2
8' STR	8
8' STR SKM	1
5 FT SV	1
45° O/C	9
BUTTRESS SUPPORTS	12
STD HARDWARE PACK	1

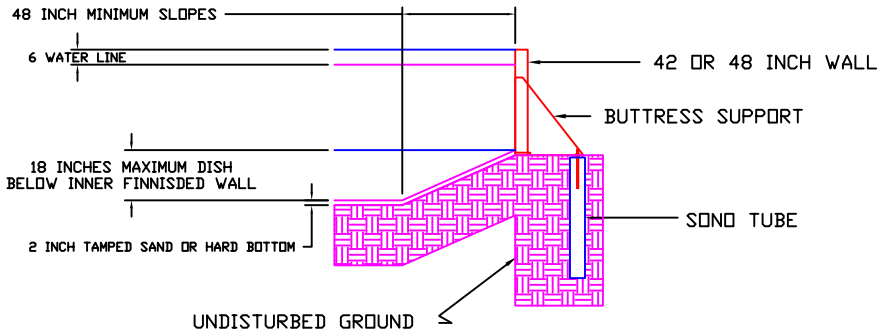

ONGROUND TOP RAIL POOLS

KIT REF# MNT2240LMO-42

MEGNA POOLS
Megna Plastic Packaging Corp.

SIZE:	SHAPE:			HAND:	DWG#	
21'-6" x 40'-6"	MONARCH			LEFT	22X40X19	B
PER.: 112'	S.A.: 767.11 ft²	VOL.:	0.00 gal.us	DATE: 16/12/2010	APPROVED:	
PER.: 34.14 m	S.A.: 71.27 m²	VOL.:	0.00 liters	DRAWN BY: NM		

STAKE OUT

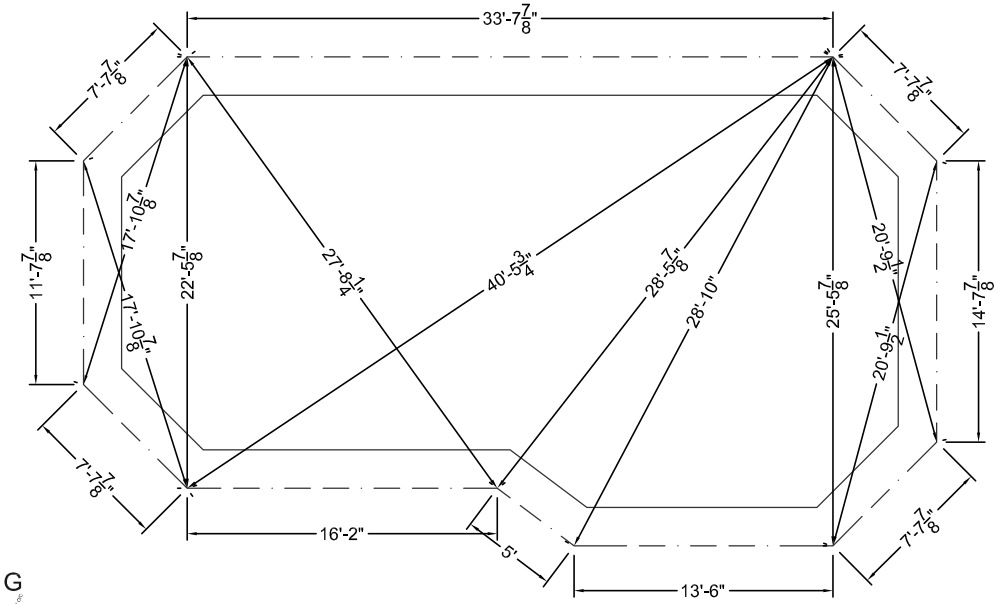

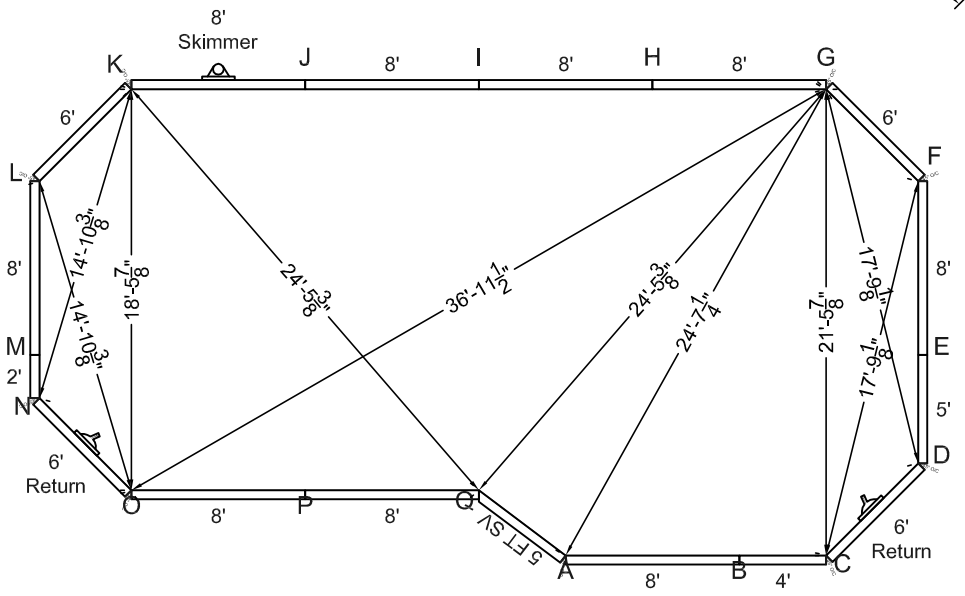

STEEL CHECK

KIT REF# MNT2240LMO-42

MEGNA POOLS

Megna Plastic Packaging Corp.

SIZE:	SHAPE:	HAND:	DWG#	
21'-6" x 40'-6"	MONARCH	RIGHT	22X40X19	A

PER.:	112'	S.A.:	767.11 ft²	VOL.:	0.00 gal.us	DATE: 16/12/2010
PER.:	34.14 m	S.A.:	71.27 m²	VOL.:	0.00 liters	DRAWN BY: NM

APPROVED:

ALL DIMENSIONS ARE FINISHED

MANUFACTURING NOTICE

1- DUE TO UNCERTAIN GROUND VARIANCES POOL WALLS MUST BE INSTALLED A MINIMUM OF 6 INCHES BELOW GRADE
2- BUTTRESS SUPPORTS MUST BE FULLY SUPPORTED INCLUDING SONO TUBES BELOW FROST LEVEL. (4 FEET)
3- 12 INCH CONCRETE COLLAR MINIMUM 24 INCHES PAST STRAIGHT SIDES.
4- FILL REMOVED, TO BE SLOPED AROUND OUTSIDE PERIMETER.

NONCOMPLIANCE VOIDS WARRANTY

5- ALL TOP RAIL POOLS AVAILABLE IN 42" WITH 5" TOP RAIL AND 48" WITH 3" TOP RAIL.

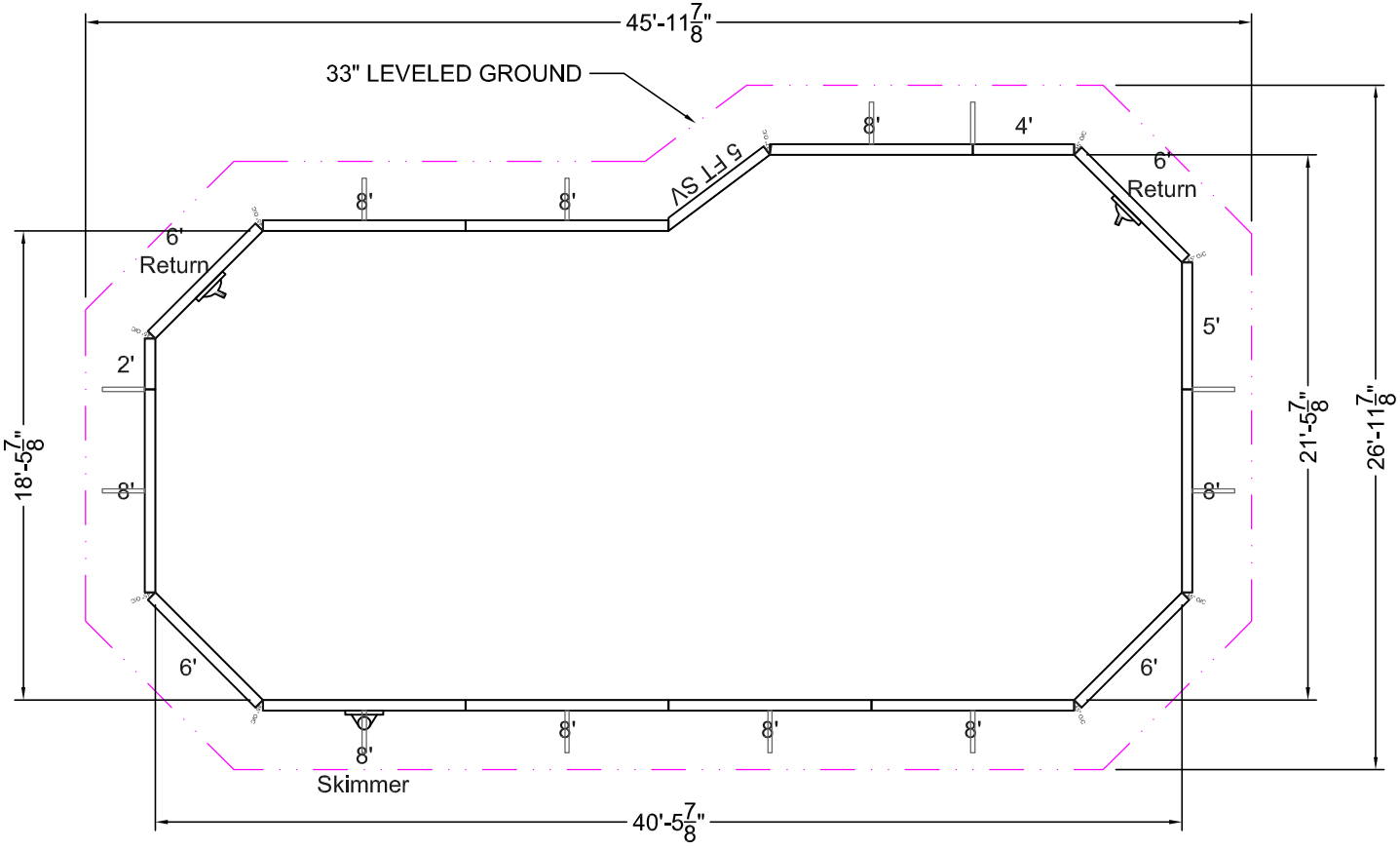

DESCRIPTION	QTY
2' STR	1
4' STR	1
5' STR	1
6' STR	2
6' STR RTN	2
8' STR	8
8' STR SKM	1
5 FT SV	1
45° O/C	9
BUTTRESS SUPPORTS	12
STD HARDWARE PACK	1

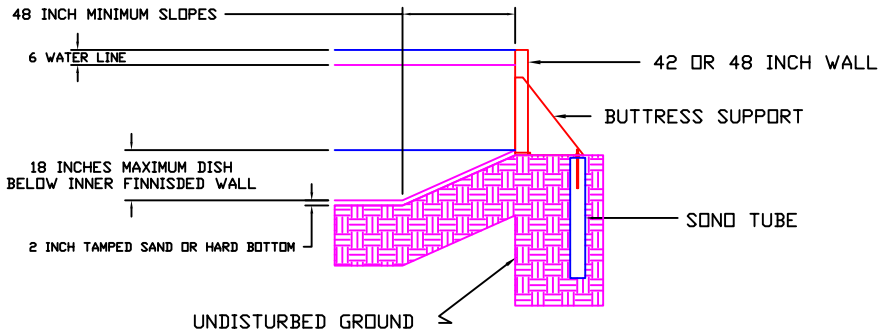

ONGROUND TOP RAIL POOLS

KIT REF# MNT2240RMO-42

MEGNA POOLS

Megna Plastic Packaging Corp.

SIZE:	SHAPE:	HAND:	DWG#	
21'-6" x 40'-6"	MONARCH	RIGHT	22X40X19	B

PER.:	112'	S.A.:	767.11 ft²	VOL.:	0.00 gal.us	DATE: 16/12/2010	APPROVED:
PER.:	34.14 m	S.A.:	71.27 m²	VOL.:	0.00 liters	DRAWN BY: NM	

STAKE OUT

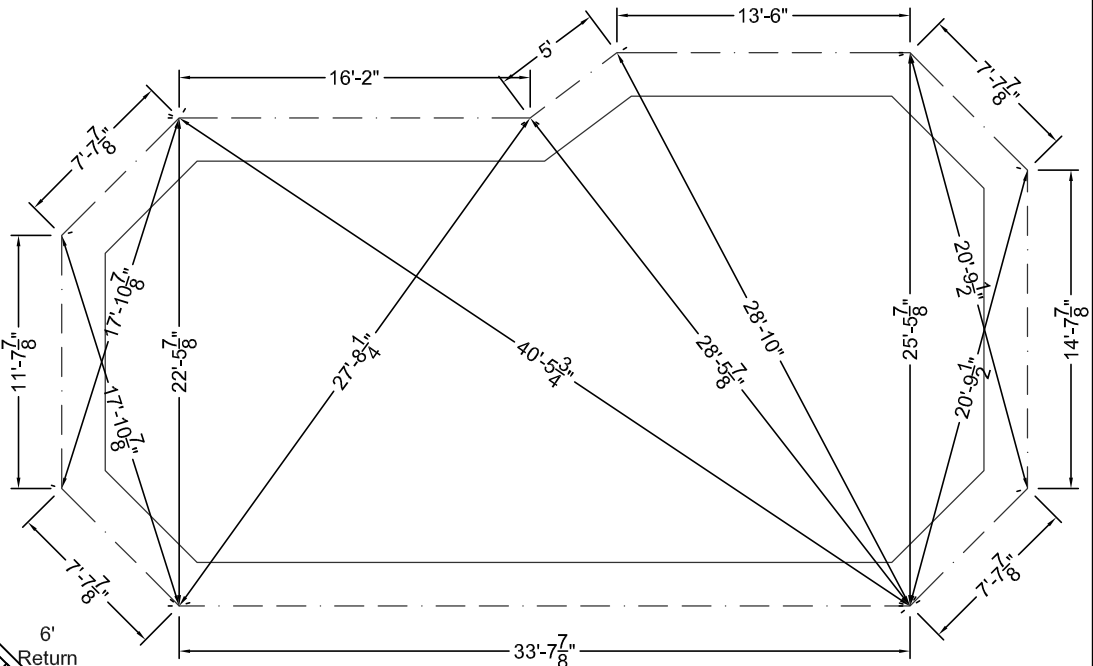

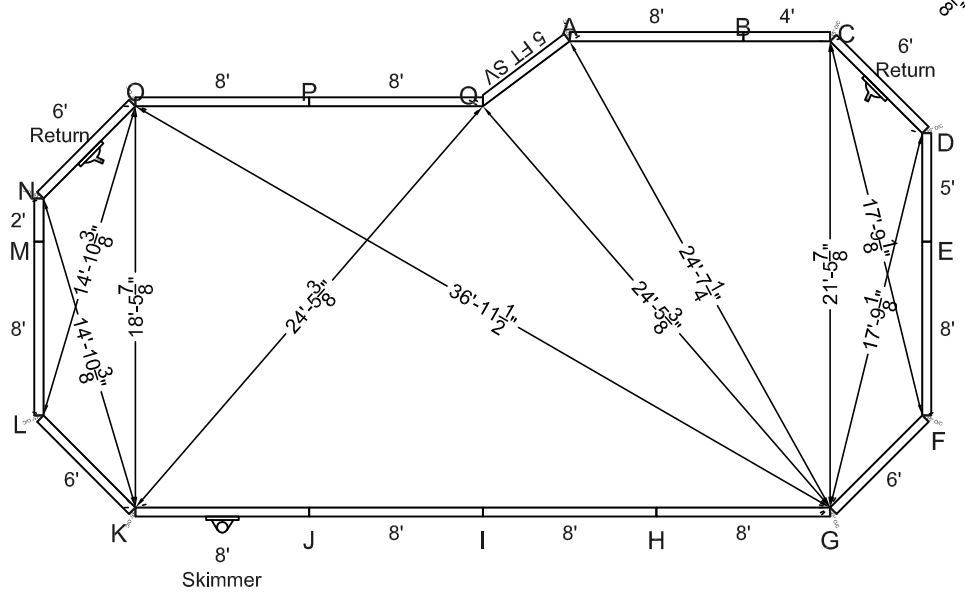

STEEL CHECK

KIT REF# MNT2240RMO-42

MEGNA POOLS
Megna Plastic Packaging Corp.

SIZE:	SHAPE:	HAND:	DWG#
14'-6" x 14'-6"	OCTAGON	N/A	16FT A

PER.:	48'	S.A.:	173.82 ft²	VOL.:	0.00 gal.us
PER.:	14.63 m	S.A.:	16.15 m²	VOL.:	0.00 liters

DATE: 17/01/2011 | APPROVED:
DRAWN BY: NM

ALL DIMENSIONS ARE FINISHED

MANUFACTURING NOTICE

1- DUE TO UNCERTAIN GROUND VARIANCES POOL WALLS MUST BE INSTALLED A MINIMUM OF 6 INCHES BELOW GRADE
2- BUTTRESS SUPPORTS MUST BE FULLY SUPPORTED INCLUDING SONO TUBES BELOW FROST LEVEL. (4 FEET)
3- 12 INCH CONCRETE COLLAR MINIMUM 24 INCHES PAST STRAIGHT SIDES.
4- FILL REMOVED, TO BE SLOPED AROUND OUTSIDE PERIMETER.

NONCOMPLIANCE VOIDS WARRANTY

5- ALL TOP RAIL POOLS AVAILABLE IN 42" WITH 5" TOP RAIL AND 48" WITH 3" TOP RAIL.

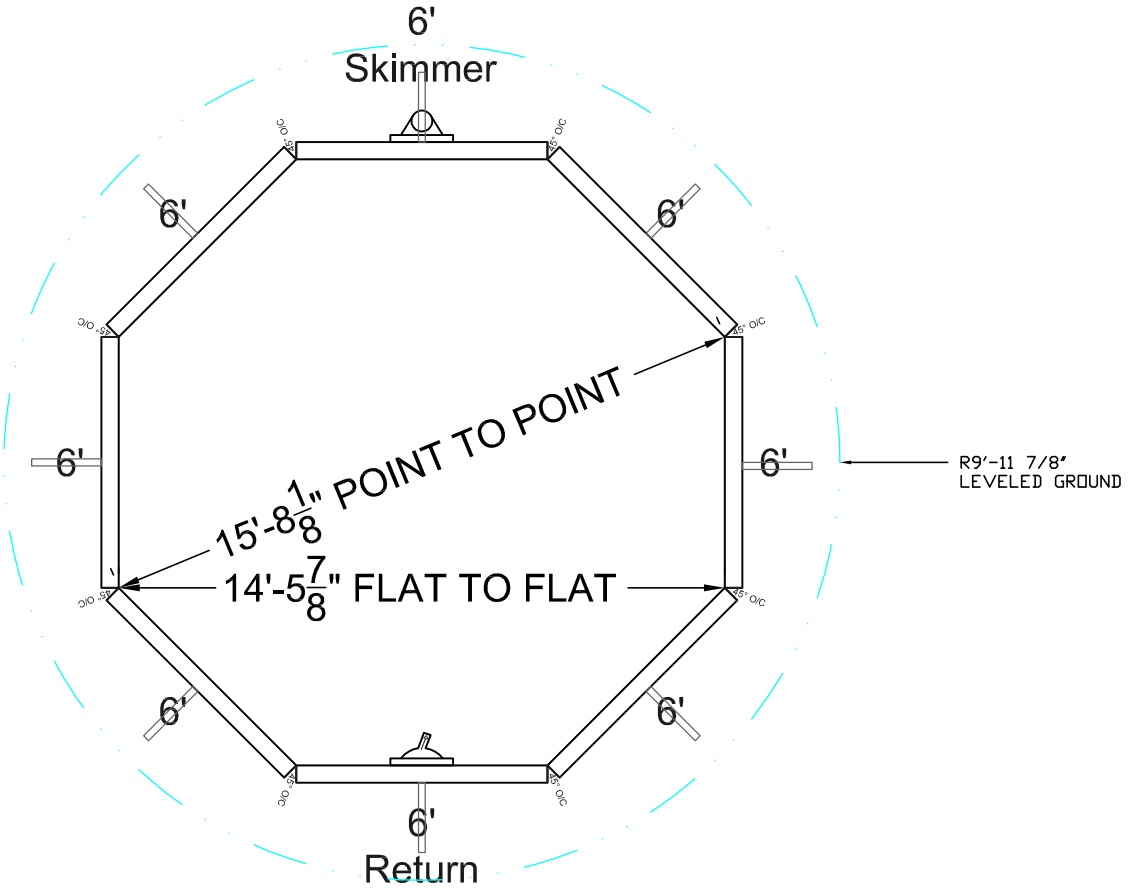

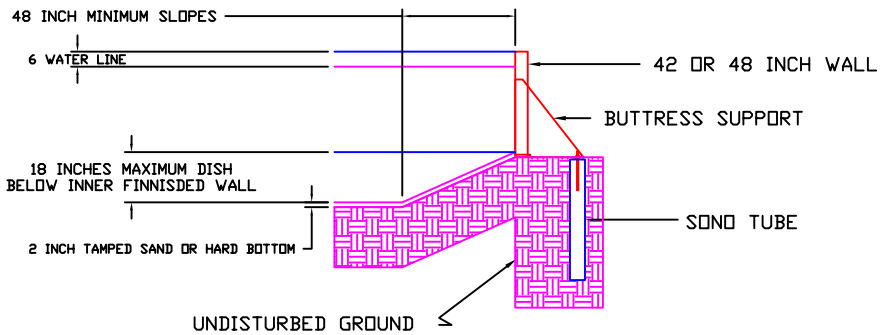

DESCRIPTION	QTY
6' STR	6
6' STR RTN	1
6' STR SKM	1
45° O/C	8
BUTTRESS SUPPORT	8
STD HARDWARE PACK	1

ONGROUND TOP RAIL POOLS

KIT REF# MNT1515-OC42

MEGNA POOLS

Megna Plastic Packaging Corp.

SIZE:		SHAPE:			HAND:	DWG#	
14'-6" x 14'-6"		OCTAGON			N/A	16FT	B
PER.:	48'	S.A.:	173.82 ft²	VOL.:	0.00 gal.us	DATE: 17/01/2011	APPROVED:
PER.:	14.63 m	S.A.:	16.15 m²	VOL.:	0.00 liters	DRAWN BY: NM	

STAKE OUT

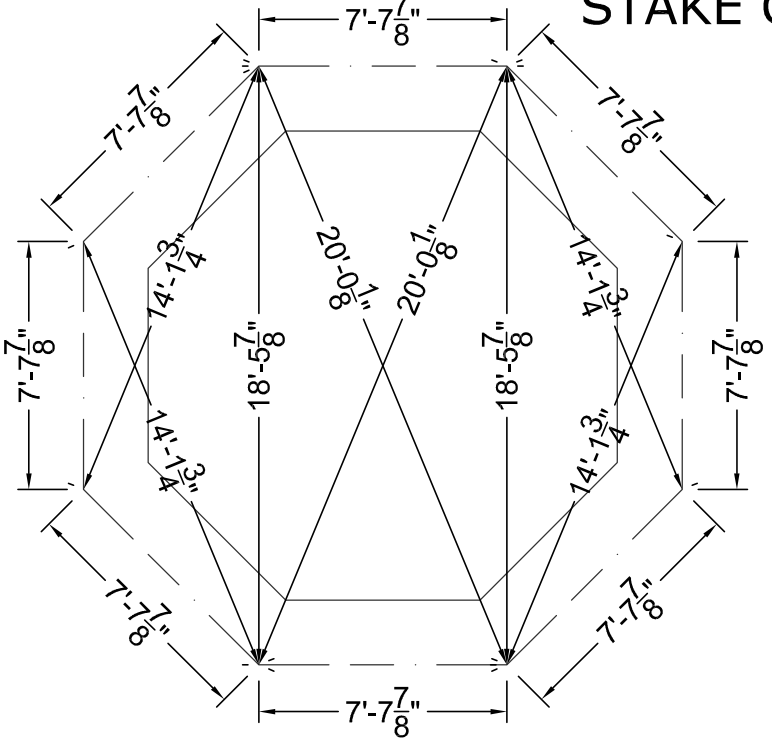

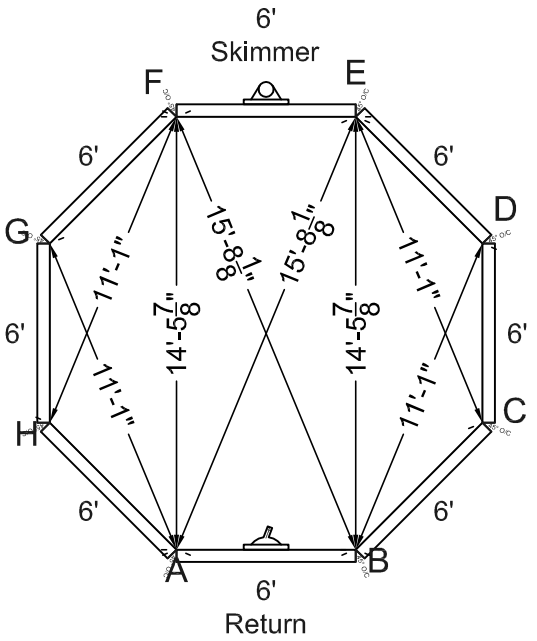

STEEL CHECK

KIT REF# MNT1515-OC42

MEGNA POOLS
Megna Plastic Packaging Corp.

SIZE:	SHAPE:	HAND:	DWG#
16'-11" x 16'-11"	OCTAGON	N/A	18FT A

PER.:	56'	S.A.:	236.59 ft²	VOL.:	0.00 gal.us
PER.:	17.07 m	S.A.:	21.98 m²	VOL.:	0.00 liters

DATE: 23/11/2010 | APPROVED:
DRAWN BY: NM

ALL DIMENSIONS ARE FINISHED

MANUFACTURING NOTICE

1- DUE TO UNCERTAIN GROUND VARIANCES POOL WALLS MUST BE INSTALLED A MINIMUM OF 6 INCHES BELOW GRADE
2- BUTTRESS SUPPORTS MUST BE FULLY SUPPORTED INCLUDING SONO TUBES BELOW FROST LEVEL. (4 FEET)
3- 12 INCH CONCRETE COLLAR MINIMUM 24 INCHES PAST STRAIGHT SIDES.
4- FILL REMOVED, TO BE SLOPED AROUND OUTSIDE PERIMETER.

NONCOMPLIANCE VOIDS WARRANTY

5- ALL TOP RAIL POOLS AVAILABLE IN 42" WITH 5" TOP RAIL AND 48" WITH 3" TOP RAIL.

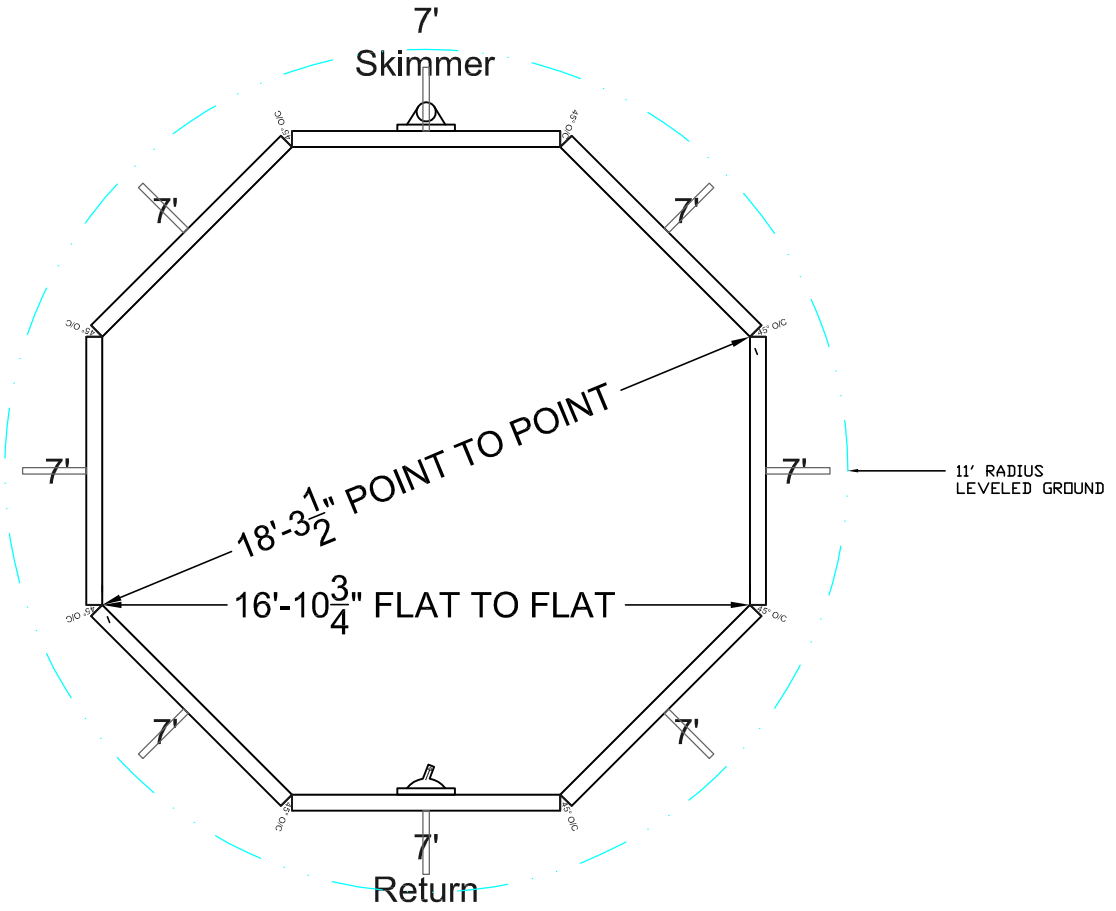

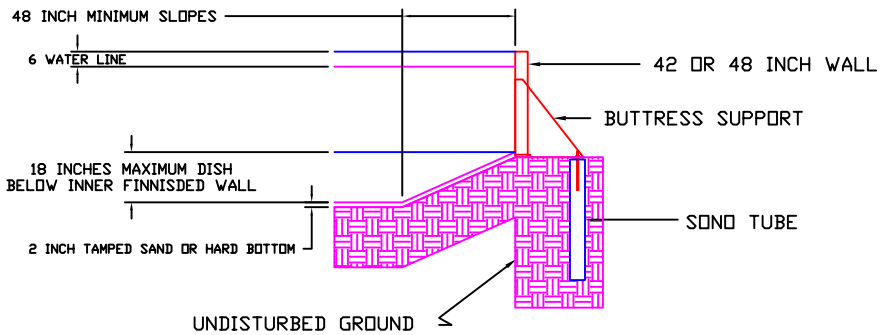

DESCRIPTION	QTY
7' STR	6
7' STR RTN	1
7' STR SKM	1
45° O/C	8
BUTTRESS SUPPORT	8
STD HARDWARE PACK	1

ONGROUND TOP RAIL POOLS

KIT REF# MNT1818-OC-42

MEGNA POOLS

Megna Plastic Packaging Corp.

SIZE:	SHAPE:		HAND:	DWG#	
16'-11" x 16'-11"	OCTAGON		N/A	18FT	B
PER.: 56'	S.A.: 236.59 ft²	VOL.: 0.00 gal.us	DATE: 23/11/2010	APPROVED:	
PER.: 17.07 m	S.A.: 21.98 m²	VOL.: 0.00 liters	DRAWN BY: NM		

STAKE OUT

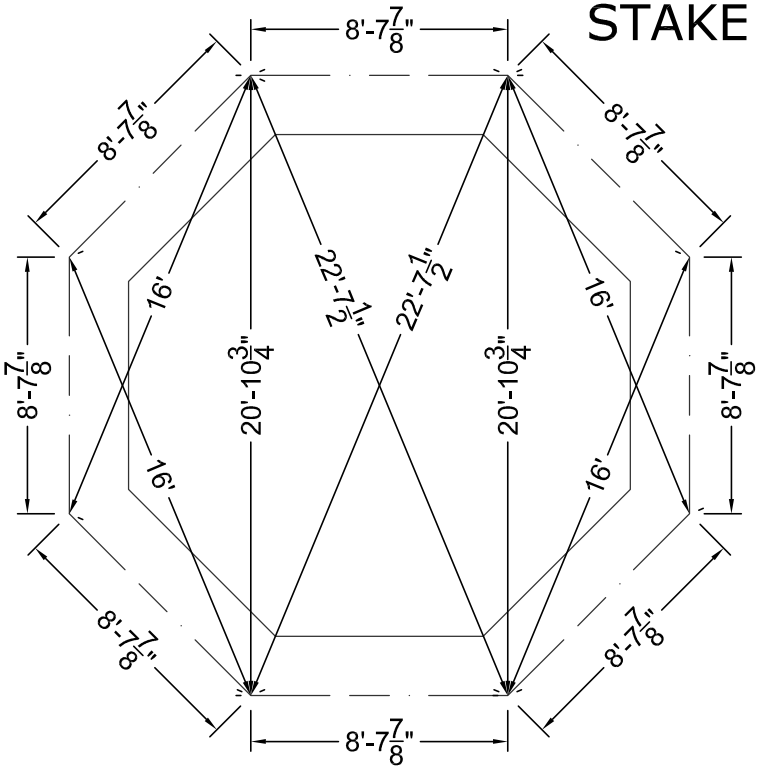

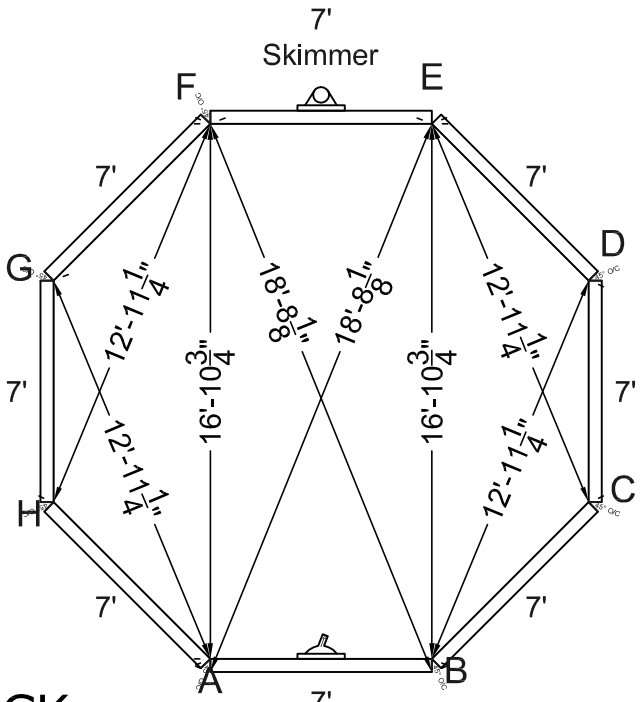

STEEL CHECK

KIT REF# MNT1818-OC-42

MEGNA POOLS
Megna Plastic Packaging Corp.

SIZE: 19'-4" x 19'-4"	SHAPE: OCTAGON		HAND: N/A	DWG# 21FT A
PER.: 64'	S.A.: 309.02 ft²	VOL.: 0.00 gal.us	DATE: 23/11/2010	APPROVED:
PER.: 19.51 m	S.A.: 28.71 m²	VOL.: 0.00 liters	DRAWN BY: NM	

ALL DIMENSIONS ARE FINISHED

MANUFACTURING NOTICE

1- DUE TO UNCERTAIN GROUND VARIANCES POOL WALLS MUST BE INSTALLED A MINIMUM OF 6 INCHES BELOW GRADE
2- BUTTRESS SUPPORTS MUST BE FULLY SUPPORTED INCLUDING SONO TUBES BELOW FROST LEVEL. (4 FEET)
3- 12 INCH CONCRETE COLLAR MINIMUM 24 INCHES PAST STRAIGHT SIDES.
4- FILL REMOVED, TO BE SLOPED AROUND OUTSIDE PERIMETER.

NONCOMPLIANCE VOIDS WARRANTY

5- ALL TOP RAIL POOLS AVAILABLE IN 42" WITH 5" TOP RAIL AND 48" WITH 3" TOP RAIL.

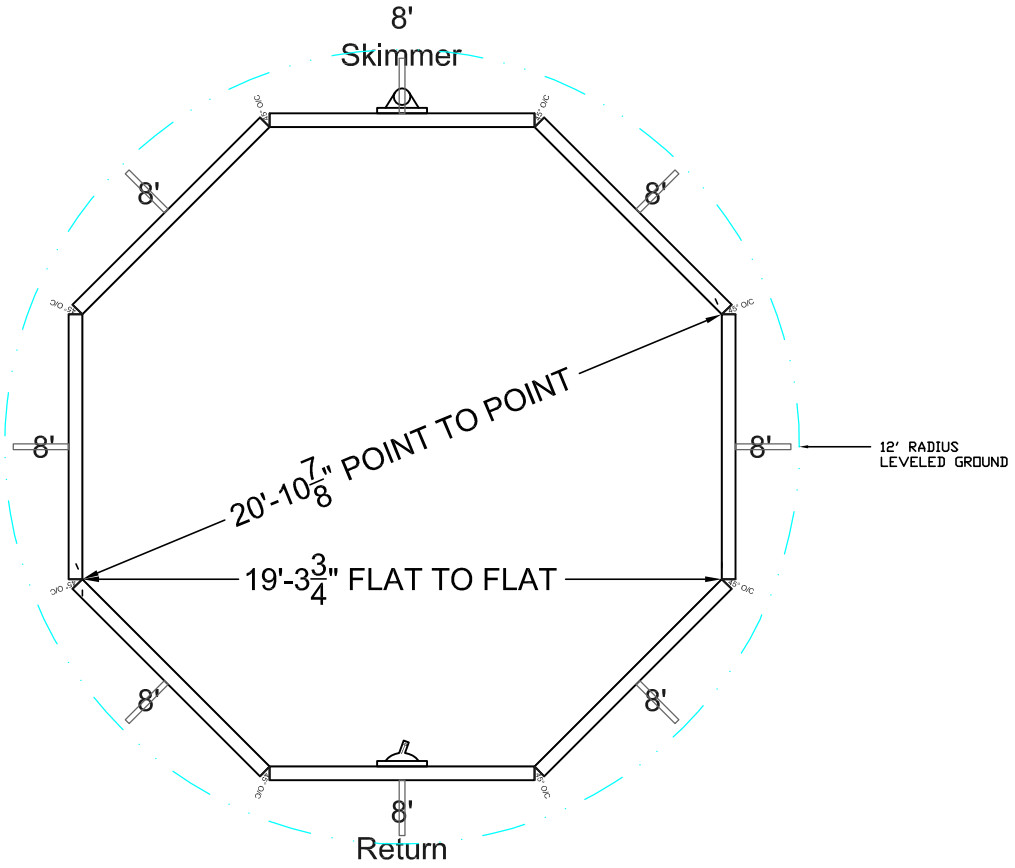

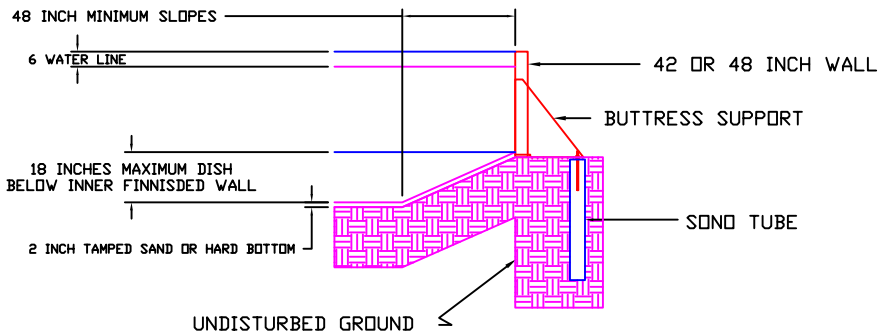

DESCRIPTION	QTY
8' STR	6
8' STR RTN	1
8' STR SKM	1
45° O/C	8
BUTTRESS SUPPORT	8
STD HARDWARE PACK	1

ONGROUND TOP RAIL POOLS

KIT REF# MNT2121-OC-42

MEGNA POOLS

Megna Plastic Packaging Corp.

SIZE: 19'-4" x 19'-4"	SHAPE: OCTAGON		HAND: N/A	DWG# 21FT B
PER.: 64'	S.A.: 309.02 ft²	VOL.: 0.00 gal.us	DATE: 23/11/2010	APPROVED:
PER.: 19.51 m	S.A.: 28.71 m²	VOL.: 0.00 liters	DRAWN BY: NM	

STAKE OUT

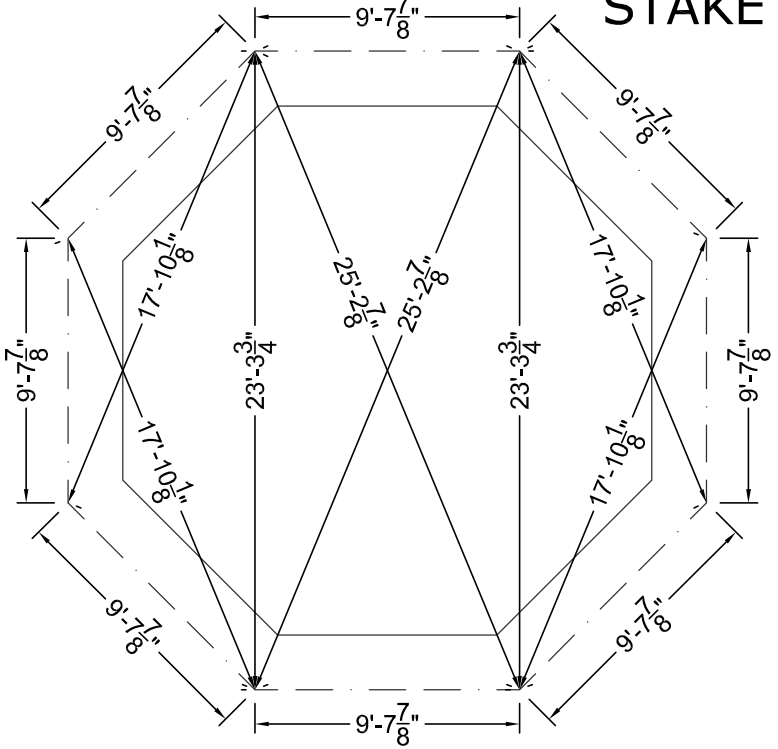

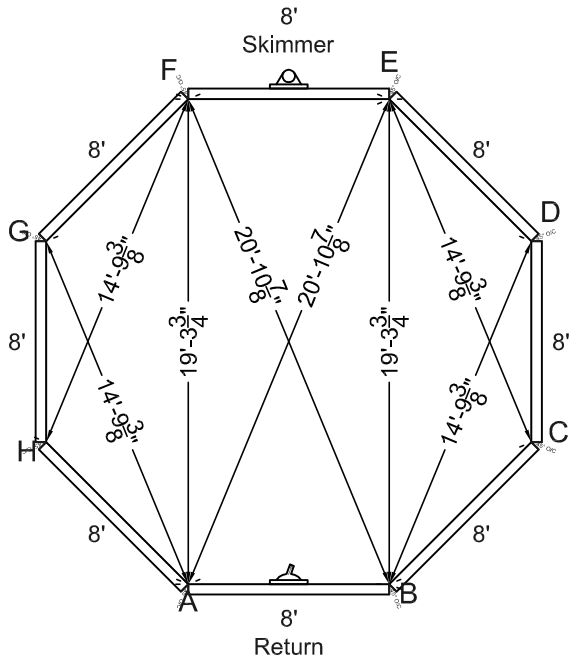

STEEL CHECK

KIT REF# MNT2121-OC-42

MEGNA POOLS
Megna Plastic Packaging Corp.

SIZE:	SHAPE:	HAND:	DWG#
24'-2" x 24'-2"	OCTAGON	N/A	26FT A

PER.:	80'	S.A.:	482.84 ft²	VOL.:	0.00 gal.us
PER.:	24.38 m	S.A.:	44.86 m²	VOL.:	0.00 liters

DATE: 17/01/2011 | APPROVED:
DRAWN BY: NM

ALL DIMENSIONS ARE FINISHED

MANUFACTURING NOTICE

1- DUE TO UNCERTAIN GROUND VARIANCES POOL WALLS MUST BE INSTALLED A MINIMUM OF 6 INCHES BELOW GRADE
2- BUTTRESS SUPPORTS MUST BE FULLY SUPPORTED INCLUDING SONO TUBES BELOW FROST LEVEL. (4 FEET)
3- 12 INCH CONCRETE COLLAR MINIMUM 24 INCHES PAST STRAIGHT SIDES.
4- FILL REMOVED, TO BE SLOPED AROUND OUTSIDE PERIMETER.

NONCOMPLIANCE VOIDS WARRANTY

5- ALL TOP RAIL POOLS AVAILABLE IN 42" WITH 5" TOP RAIL AND 48" WITH 3" TOP RAIL.

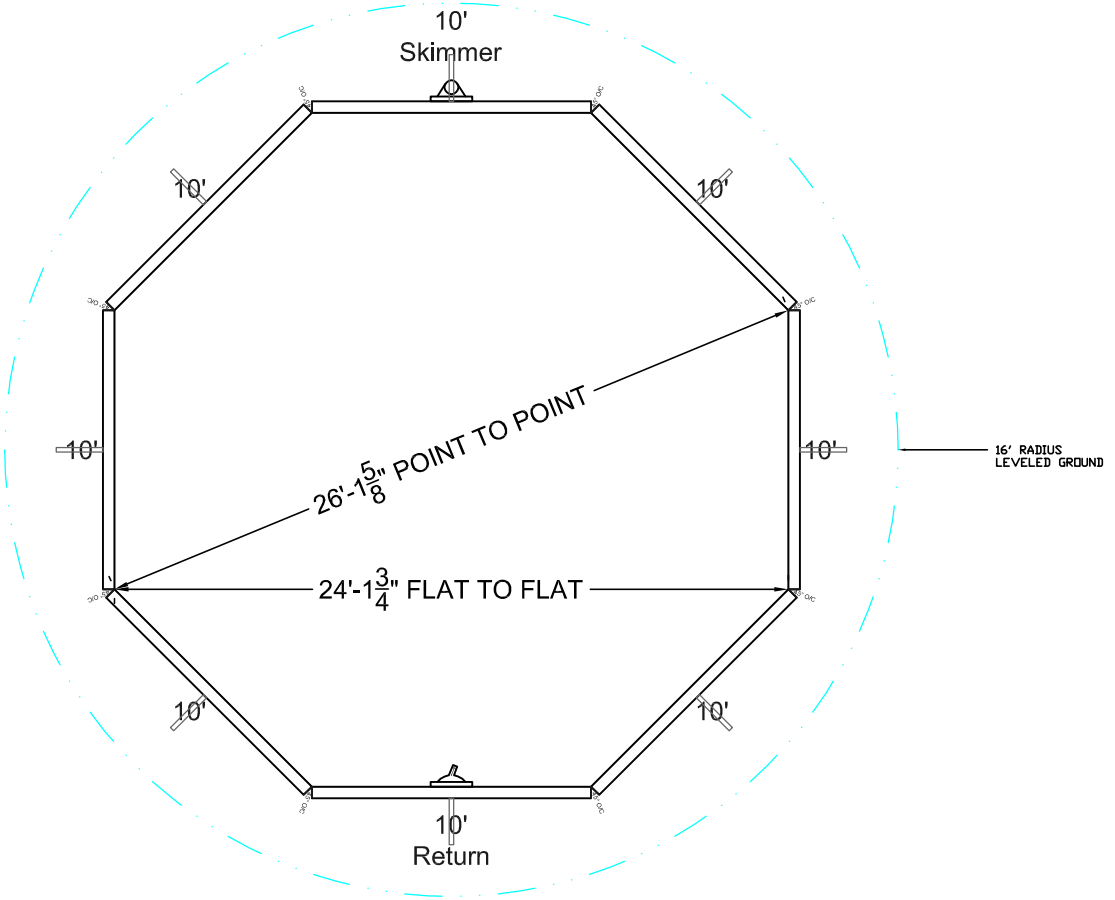

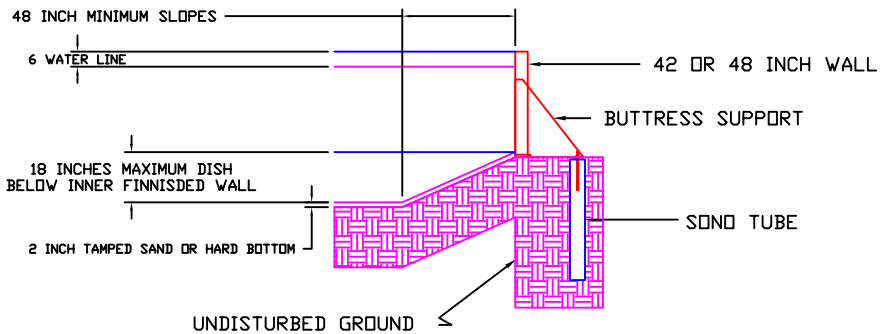

DESCRIPTION	QTY
10' STR	6
10' STR RTN	1
10' STR SKM	1
45° O/C	8
BUTTRESS SUPPORT	8
STD HARDWARE PACK	1

ONGROUND TOP RAIL POOLS

KIT REF# MNT2424-OC-42

MEGNA POOLS

Megna Plastic Packaging Corp.

SIZE:	SHAPE:	HAND:	DWG#
24'-2" x 24'-2"	OCTAGON	N/A	26FT B

PER.:	80'	S.A.:	482.84 ft²	VOL.:	0.00 gal.us
PER.:	24.38 m	S.A.:	44.86 m²	VOL.:	0.00 liters

DATE: 17/01/2011

DRAWN BY: NM

APPROVED:

STAKE OUT

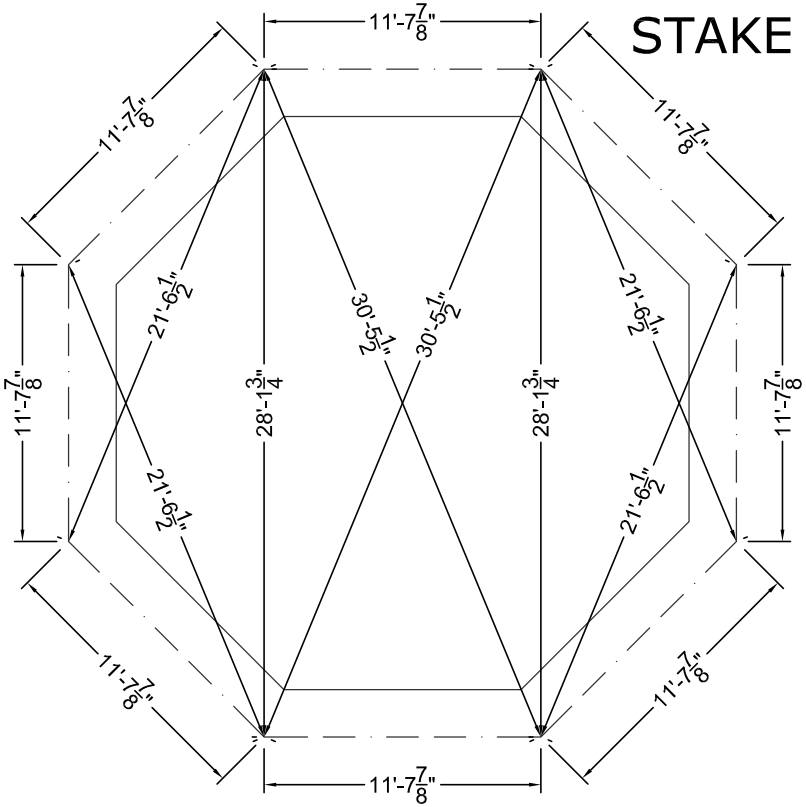

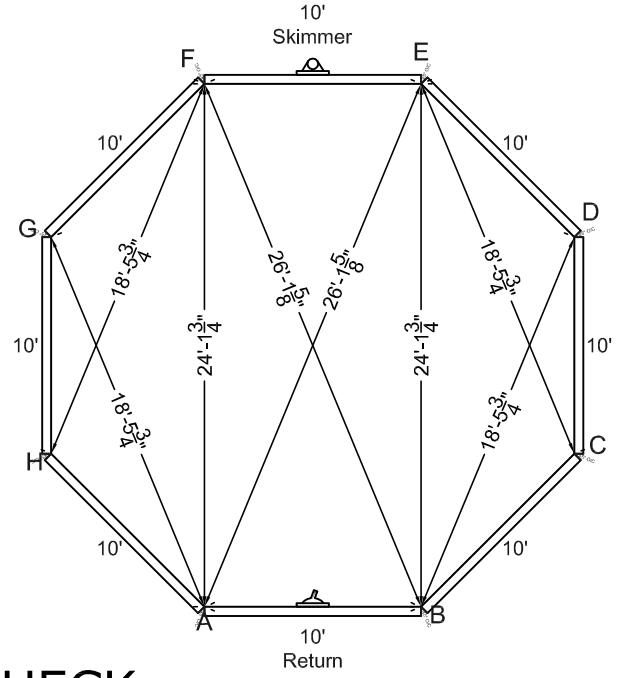

STEEL CHECK

KIT REF# MNT2424-OC-42

MEGNA POOLS
Megna Plastic Packaging Corp.

SIZE:	SHAPE:	HAND:	DWG#
10' x 17'-10"	OVAL	N/A	10X18 A

PER.:	47'	S.A.:	156.44 ft²	VOL.:	0.00 gal.us
PER.:	14.33 m	S.A.:	14.53 m²	VOL.:	0.00 liters

DATE: 23/11/2010 | APPROVED:

DRAWN BY: NM

ALL DIMENSIONS ARE FINISHED

MANUFACTURING NOTICE

1- DUE TO UNCERTAIN GROUND VARIANCES POOL WALLS MUST BE INSTALLED A MINIMUM OF 6 INCHES BELOW GRADE
2- BUTTRESS SUPPORTS MUST BE FULLY SUPPORTED INCLUDING SONO TUBES BELOW FROST LEVEL. (4 FEET)
3- 12 INCH CONCRETE COLLAR MINIMUM 24 INCHES PAST STRAIGHT SIDES.
4- FILL REMOVED, TO BE SLOPED AROUND OUTSIDE PERIMETER.

NONCOMPLIANCE VOIDS WARRANTY

5- ALL TOP RAIL POOLS AVAILABLE IN 42" WITH 5" TOP RAIL AND 48" WITH 3" TOP RAIL.

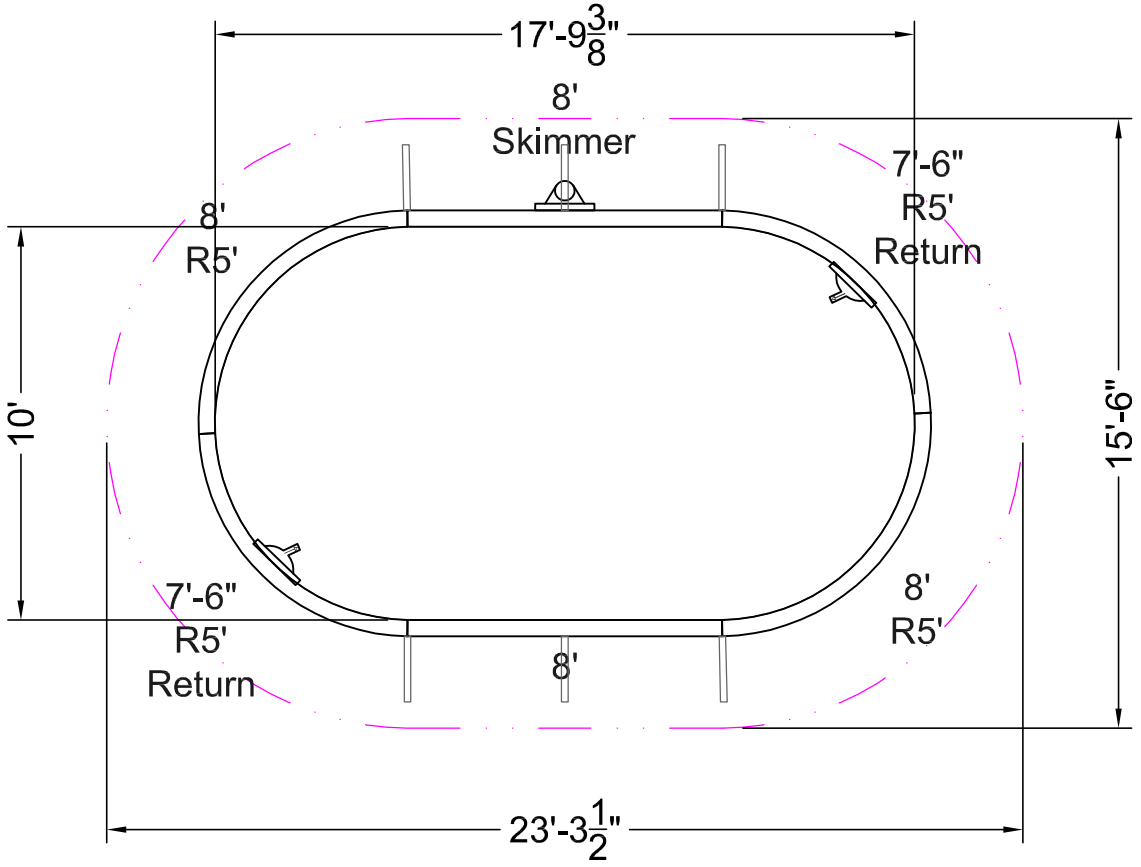

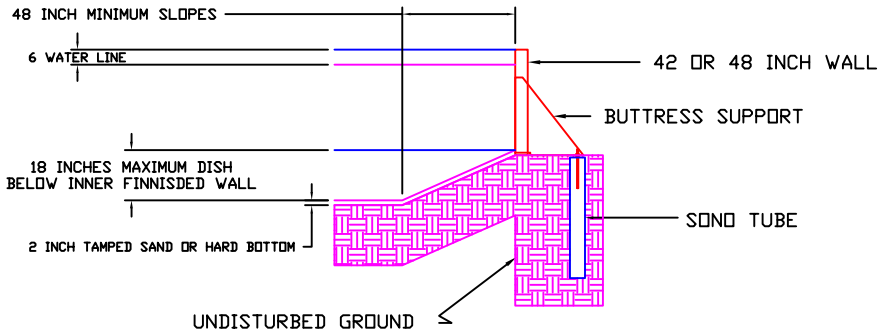

DESCRIPTION	QTY
8' STR	1
8' STR SKM	1
7'-6"x5' RAD RTN	2
8'x5' RAD	2
BUTTRESS SUPPORT	6
STD HARDWARE PACK	1

ONGROUND TOP RAIL POOLS

KIT REF# MNT1018-OV-42

MEGNA POOLS
Megna Plastic Packaging Corp.

SIZE:	SHAPE:	HAND:	DWG#	
10' x 17'-10"	OVAL	N/A	10X18	B

PER.:	47'	S.A.:	156.44 ft²	VOL.:	0.00 gal.us	DATE: 23/11/2010	APPROVED:
PER.:	14.33 m	S.A.:	14.53 m²	VOL.:	0.00 liters	DRAWN BY: NM	

STAKE OUT

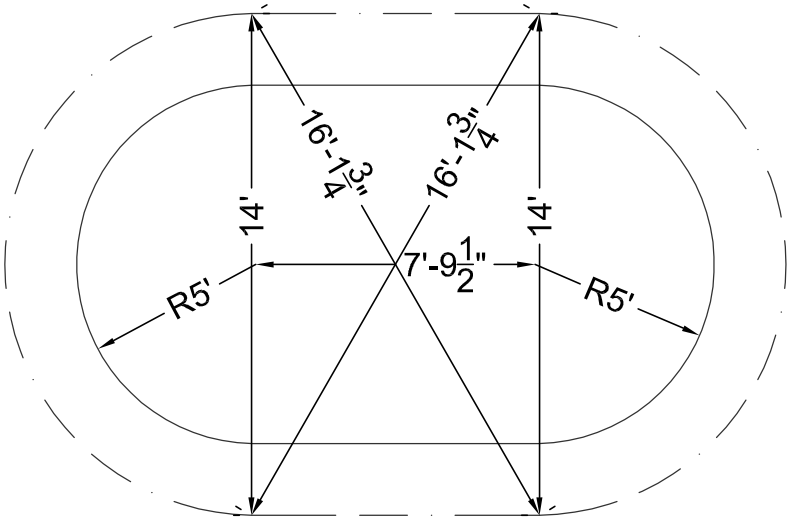

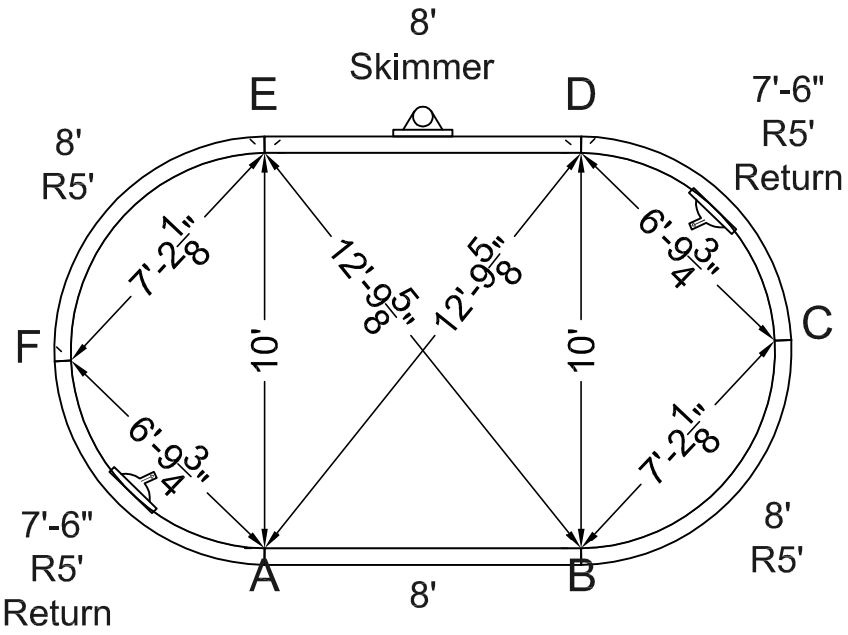

STEEL CHECK

KIT REF# MNT1018-OV-42

MEGNA POOLS
Megna Plastic Packaging Corp.

SIZE:	SHAPE:	HAND:	DWG#
12' x 18'-2"	OVAL	N/A	12X18 A

PER.:	50'	S.A.:	186.90 ft²	VOL.:	0.00 gal.us
PER.:	15.24 m	S.A.:	17.36 m²	VOL.:	0.00 liters

DATE: 23/11/2010 | APPROVED:

DRAWN BY: NM

ALL DIMENSIONS ARE FINISHED

MANUFACTURING NOTICE

1- DUE TO UNCERTAIN GROUND VARIANCES POOL WALLS MUST BE INSTALLED A MINIMUM OF 6 INCHES BELOW GRADE
2- BUTTRESS SUPPORTS MUST BE FULLY SUPPORTED INCLUDING SONO TUBES BELOW FROST LEVEL. (4 FEET)
3- 12 INCH CONCRETE COLLAR MINIMUM 24 INCHES PAST STRAIGHT SIDES.
4- FILL REMOVED, TO BE SLOPED AROUND OUTSIDE PERIMETER.

NONCOMPLIANCE VOIDS WARRANTY

5- ALL TOP RAIL POOLS AVAILABLE IN 42" WITH 5" TOP RAIL AND 48" WITH 3" TOP RAIL.

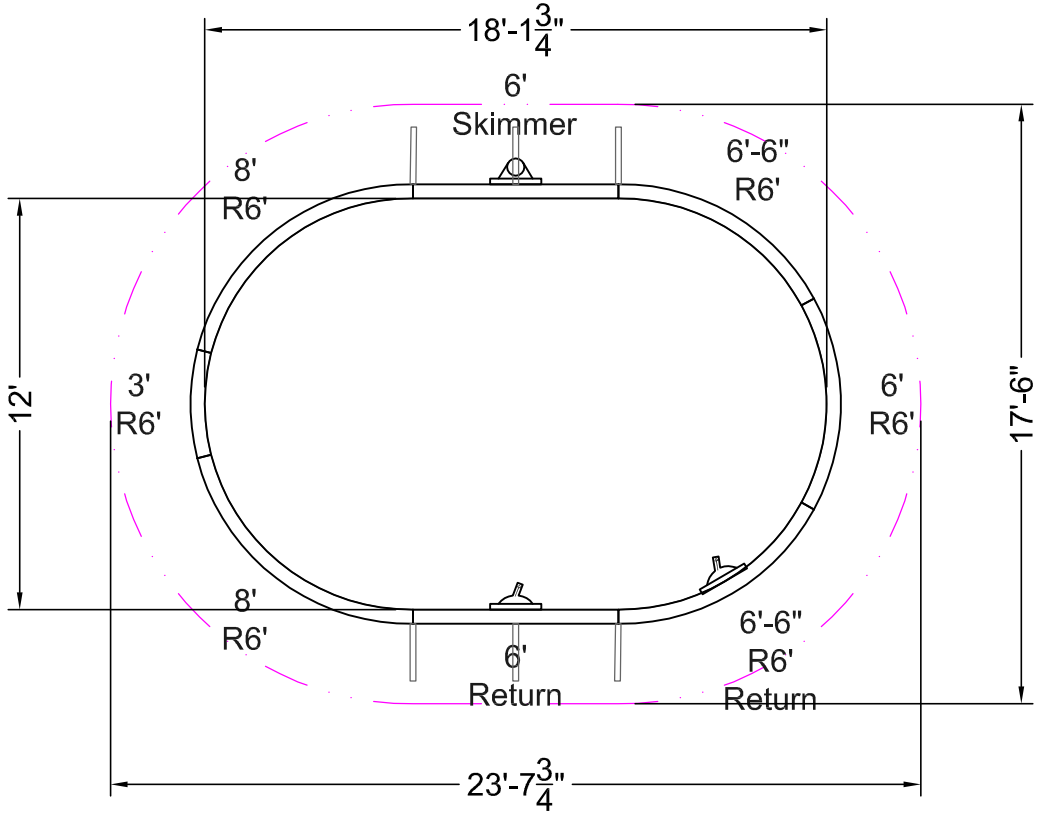

DESCRIPTION	QTY
6' STR RTN	1
6' STR SKM	1
3'x6' RAD	1
6'x6' RAD	1
6'-6"x6' RAD	1
6'-6"x6' RAD RTN	1
8'x6' RAD	2
BUTTRESS SUPPORT	6
STD HARDWARE PACK	1

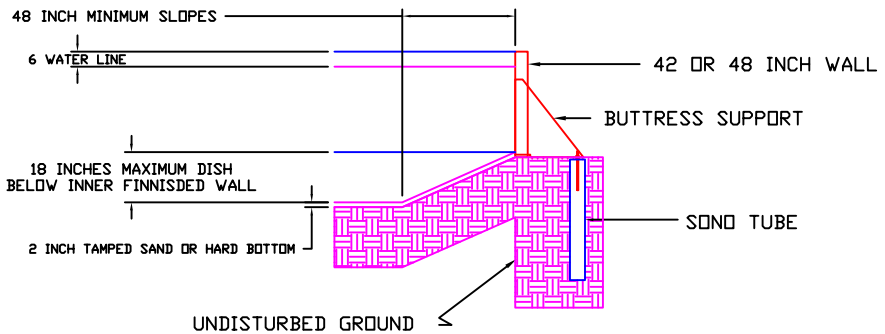

ONGROUND TOP RAIL POOLS

KIT REF# MNT1218-OV-42

MEGNA POOLS

Megna Plastic Packaging Corp.

SIZE:	SHAPE:	HAND:	DWG#	
12' x 18'-2"	OVAL	N/A	12X18	B

PER.:	50'	S.A.:	186.90 ft²	VOL.:	0.00 gal.us	DATE: 23/11/2010	APPROVED:
PER.:	15.24 m	S.A.:	17.36 m²	VOL.:	0.00 liters	DRAWN BY: NM	

STAKE OUT

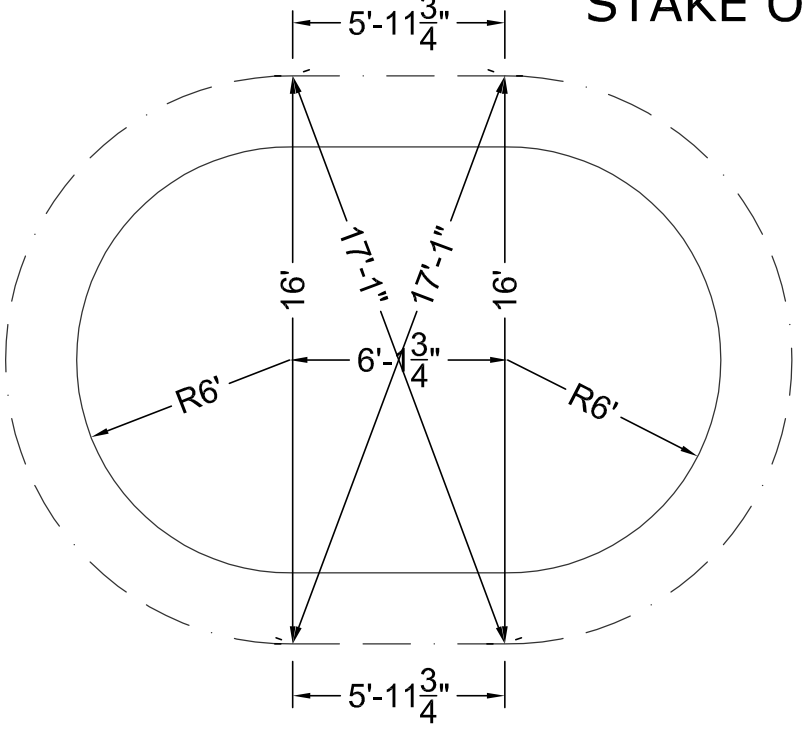

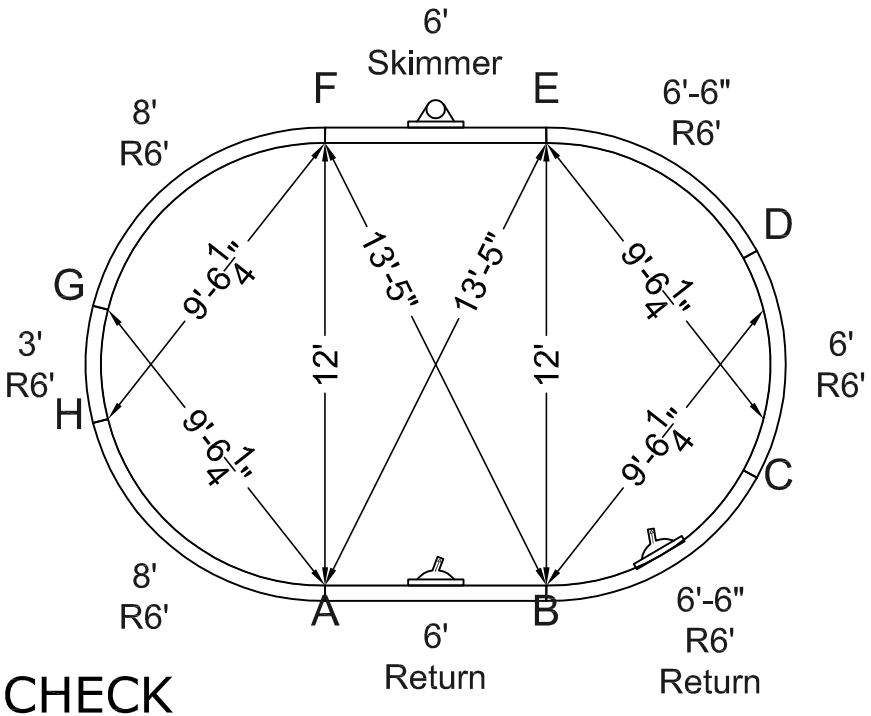

STEEL CHECK

KIT REF# MNT1218-OV-42

MEGNA POOLS
Megna Plastic Packaging Corp.

SIZE:	SHAPE:	HAND:	DWG#	
12' x 24'-2"	OVAL	N/A	12X24	A

PER.:	62'	S.A.:	258.89 ft²	VOL.:	0.00 gal.us	DATE: 23/11/2010	APPROVED:
PER.:	18.90 m	S.A.:	24.05 m²	VOL.:	0.00 liters	DRAWN BY: NM	

ALL DIMENSIONS ARE FINISHED

MANUFACTURING NOTICE

1- DUE TO UNCERTAIN GROUND VARIANCES POOL WALLS MUST BE INSTALLED A MINIMUM OF 6 INCHES BELOW GRADE
2- BUTTRESS SUPPORTS MUST BE FULLY SUPPORTED INCLUDING SONO TUBES BELOW FROST LEVEL. (4 FEET)
3- 12 INCH CONCRETE COLLAR MINIMUM 24 INCHES PAST STRAIGHT SIDES.
4- FILL REMOVED, TO BE SLOPED AROUND OUTSIDE PERIMETER.

NONCOMPLIANCE VOIDS WARRANTY

5- ALL TOP RAIL POOLS AVAILABLE IN 42" WITH 5" TOP RAIL AND 48" WITH 3" TOP RAIL.

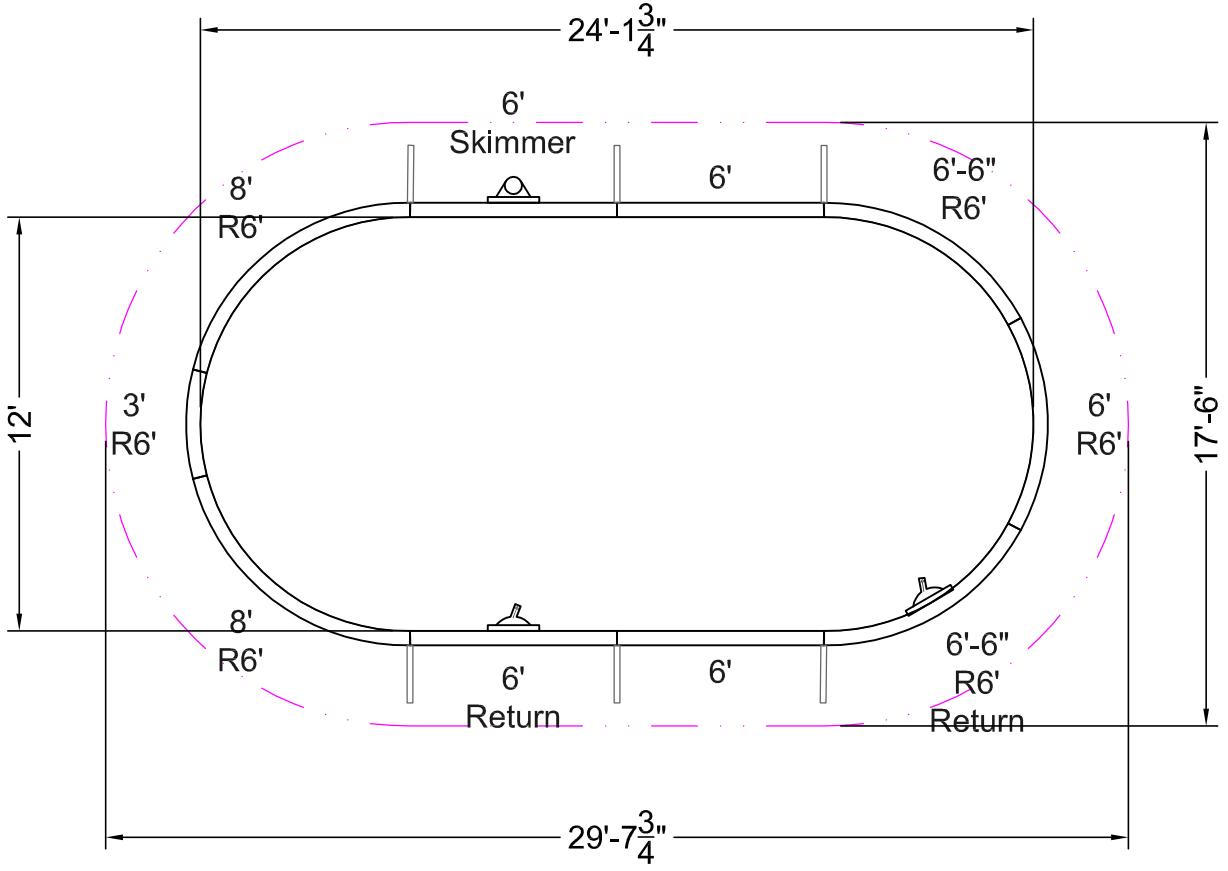

DESCRIPTION	QTY
6' STR	2
6' STR RTN	1
6' STR SKM	1
3'x6' RAD	1
6'x6' RAD	1
6'-6"x6' RAD	1
6'-6"x6' RAD RTN	1
8'x6' RAD	2
BUTTRESS SUPPORT	6
STD HARDWARE PACK	1

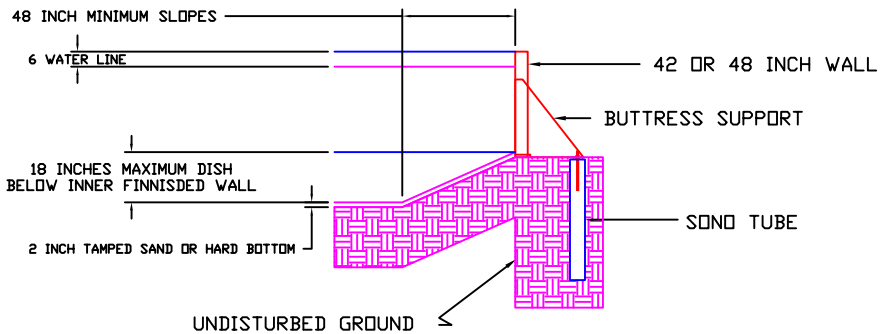

ONGROUND TOP RAIL POOLS

KIT REF# MNT1224-OV-42

MEGNA POOLS
Megna Plastic Packaging Corp.

SIZE:	SHAPE:	HAND:	DWG#
12' x 24'-2"	OVAL	N/A	12X24 B

PER.:	62'	S.A.:	258.89 ft²	VOL.:	0.00 gal.us
PER.:	18.90 m	S.A.:	24.05 m²	VOL.:	0.00 liters

DATE: 23/11/2010
DRAWN BY: NM
APPROVED:

STAKE OUT

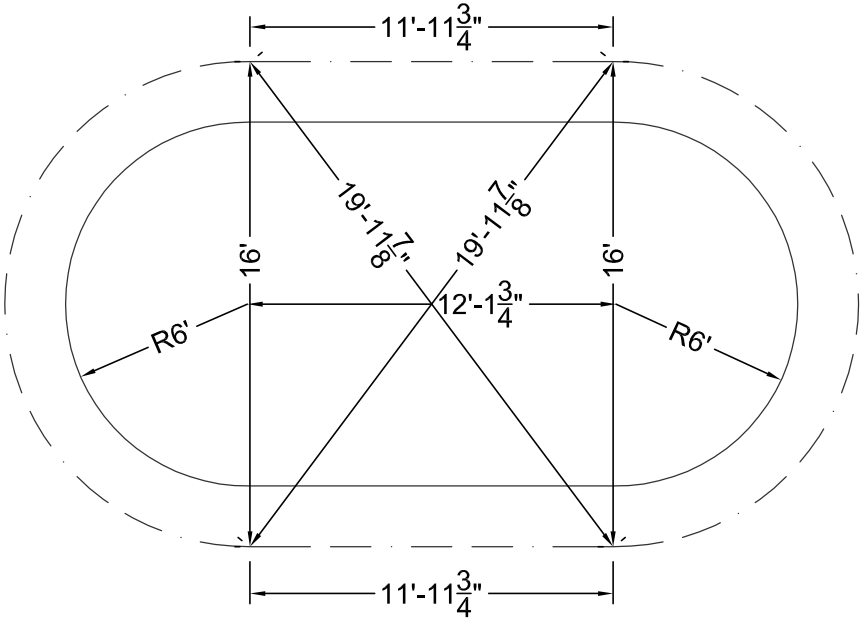

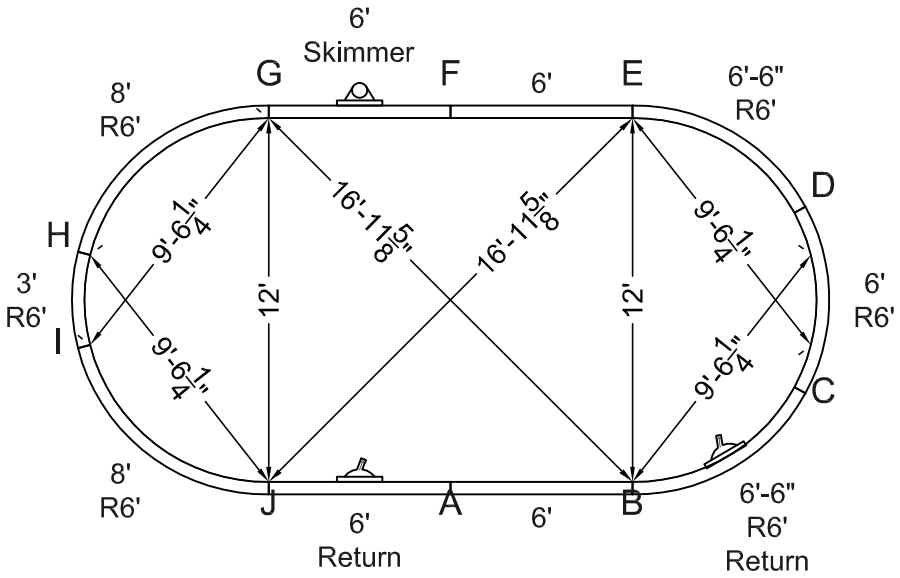

STEEL CHECK

KIT REF# MNT1224-OV-42

MEGNA POOLS
Megna Plastic Packaging Corp.

SIZE: 12' x 28'-2"	SHAPE: OVAL		HAND: N/A	DWG# 12X28 A
PER.: 70'	S.A.: 306.89 ft²	VOL.: 0.00 gal.us	DATE: 13/12/2010	APPROVED:
PER.: 21.34 m	S.A.: 28.51 m²	VOL.: 0.00 liters	DRAWN BY: NM	

ALL DIMENSIONS ARE FINISHED

MANUFACTURING NOTICE

1- DUE TO UNCERTAIN GROUND VARIANCES POOL WALLS MUST BE INSTALLED A MINIMUM OF 6 INCHES BELOW GRADE
2- BUTTRESS SUPPORTS MUST BE FULLY SUPPORTED INCLUDING SONO TUBES BELOW FROST LEVEL. (4 FEET)
3- 12 INCH CONCRETE COLLAR MINIMUM 24 INCHES PAST STRAIGHT SIDES.
4- FILL REMOVED, TO BE SLOPED AROUND OUTSIDE PERIMETER.

NONCOMPLIANCE VOIDS WARRANTY

5- ALL TOP RAIL POOLS AVAILABLE IN 42" WITH 5" TOP RAIL AND 48" WITH 3" TOP RAIL.

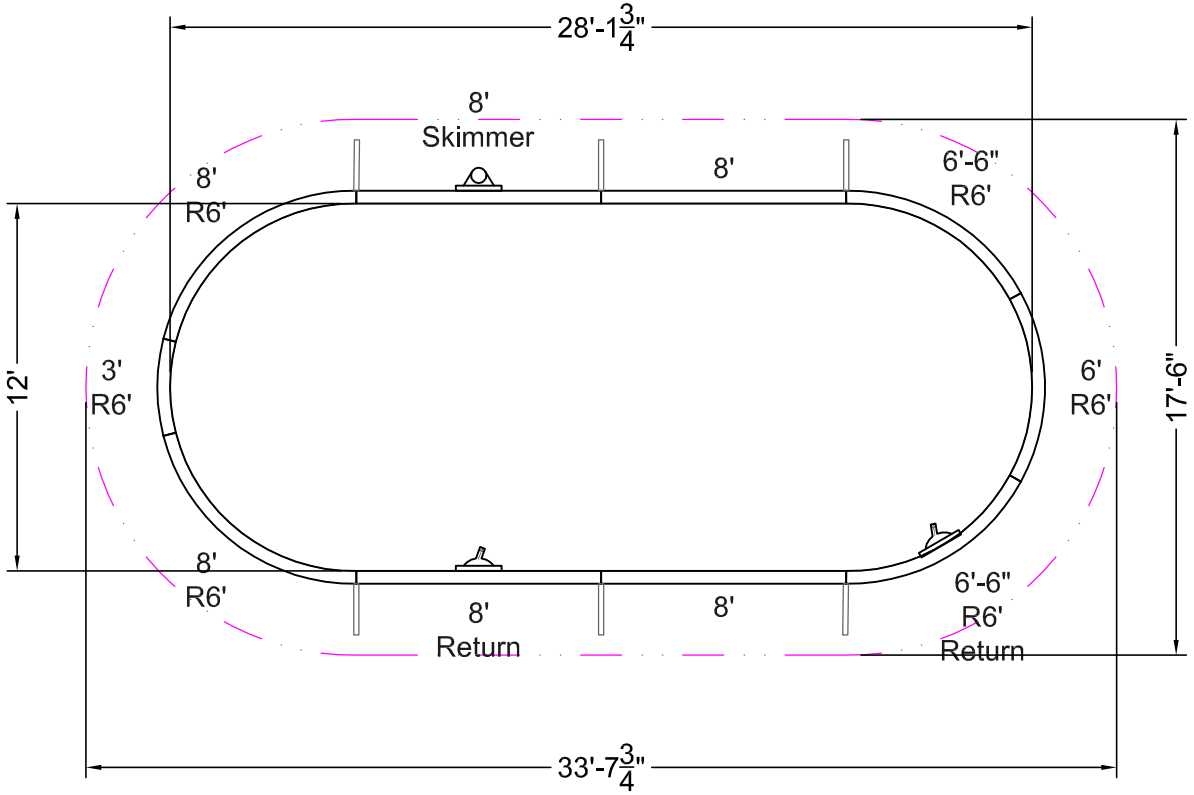

DESCRIPTION	QTY
8' STR	2
8' STR RTN	1
8' STR SKM	1
3'x6' RAD	1
6'x6' RAD	1
6'-6"x6' RAD	1
6'-6"x6' RAD RTN	1
8'x6' RAD	2
BUTTRESS SUPPORT	6
STD HARDWARE PACK	1

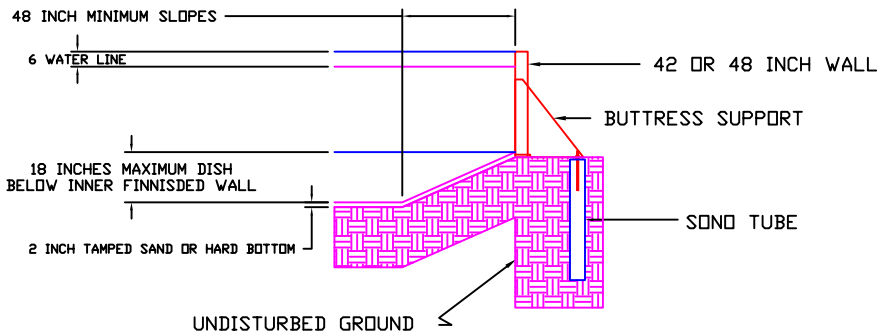

ONGROUND TOP RAIL POOLS

KIT REF# MNT1228-OV-42

MEGNA POOLS
Megna Plastic Packaging Corp.

SIZE:	SHAPE:	HAND:	DWG#	
12' x 28'-2"	OVAL	N/A	12X28	B

PER.:	70'	S.A.:	306.89 ft²	VOL.:	0.00 gal.us	DATE: 13/12/2010	APPROVED:
PER.:	21.34 m	S.A.:	28.51 m²	VOL.:	0.00 liters	DRAWN BY: NM	

STAKE OUT

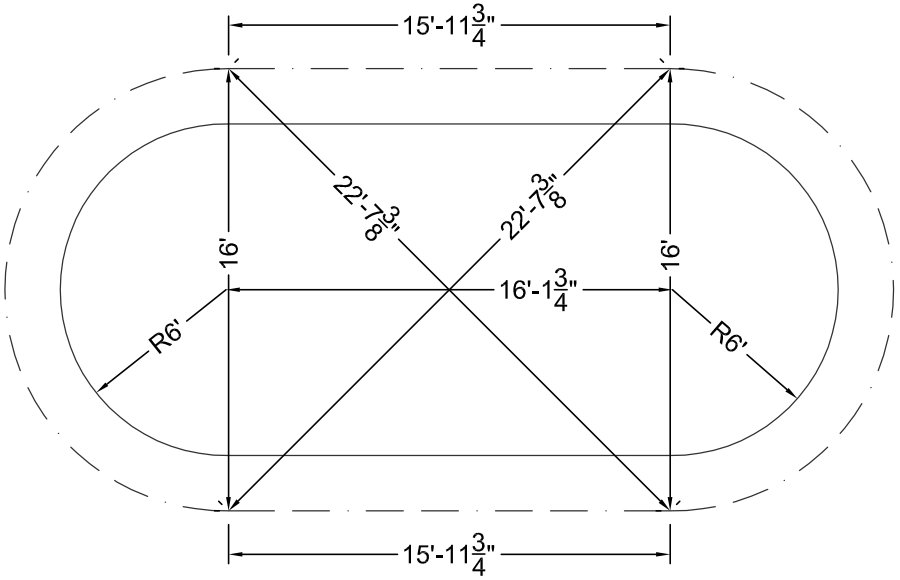

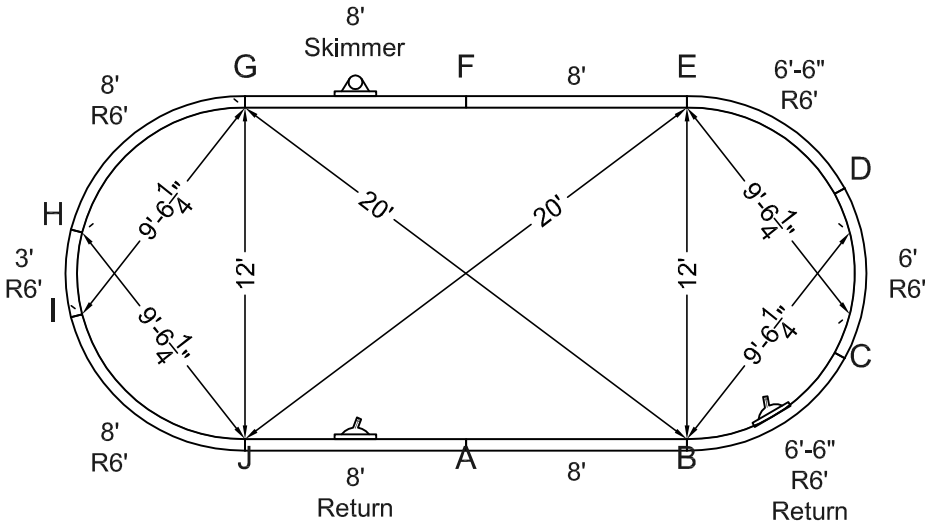

STEEL CHECK

KIT REF# MNT1228-OV-42

MEGNA POOLS
Megna Plastic Packaging Corp.

SIZE:	SHAPE:	HAND:	DWG#
14' x 28'	OVAL	N/A	14X28 A

PER.:	72'	S.A.:	350.06 ft²	VOL.:	0.00 gal.us	DATE: 23/11/2010
PER.:	21.95 m	S.A.:	32.52 m²	VOL.:	0.00 liters	DRAWN BY: NM

APPROVED:

ALL DIMENSIONS ARE FINISHED

MANUFACTURING NOTICE

1- DUE TO UNCERTAIN GROUND VARIANCES POOL WALLS MUST BE INSTALLED A MINIMUM OF 6 INCHES BELOW GRADE
2- BUTTRESS SUPPORTS MUST BE FULLY SUPPORTED INCLUDING SONO TUBES BELOW FROST LEVEL. (4 FEET)
3- 12 INCH CONCRETE COLLAR MINIMUM 24 INCHES PAST STRAIGHT SIDES.
4- FILL REMOVED, TO BE SLOPED AROUND OUTSIDE PERIMETER.

NONCOMPLIANCE VOIDS WARRANTY

5- ALL TOP RAIL POOLS AVAILABLE IN 42" WITH 5" TOP RAIL AND 48" WITH 3" TOP RAIL.

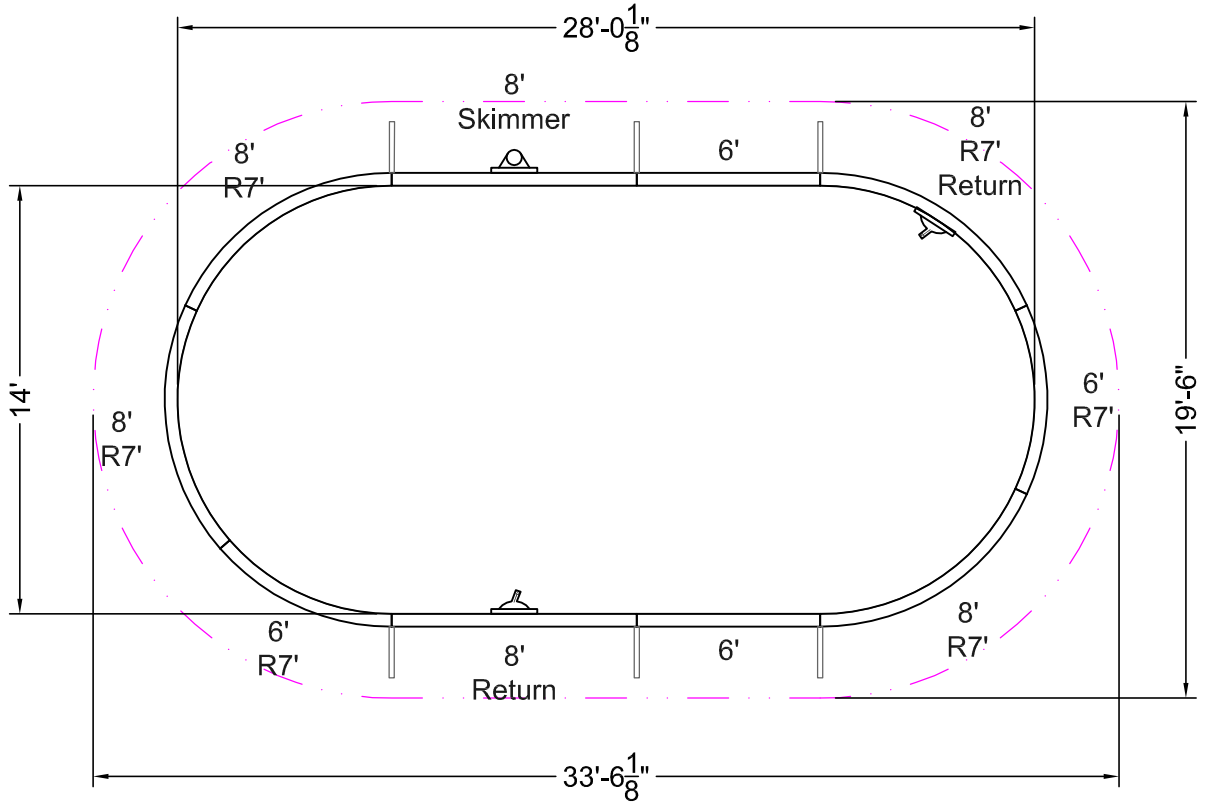

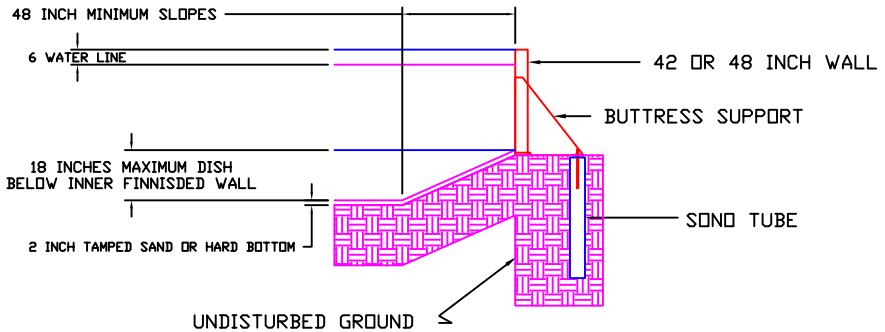

DESCRIPTION	QTY
6' STR	2
8' STR RTN	1
8' STR SKM	1
6'x7' RAD	2
8'x7' RAD	3
8'x7' RAD RTN	1
BUTTRESS SUPPORT	6
STD HARDWARE PACK	1

ONGROUND TOP RAIL POOLS

KIT REF# MNT1428-OV-42

MEGNA POOLS

Megna Plastic Packaging Corp.

SIZE:	SHAPE:	HAND:	DWG#	
14' x 28'	OVAL	N/A	14X28	B

PER.:	72'	S.A.:	350.06 ft²	VOL.:	0.00 gal.us	DATE: 23/11/2010
PER.:	21.95 m	S.A.:	32.52 m²	VOL.:	0.00 liters	DRAWN BY: NM

APPROVED:

STAKE OUT

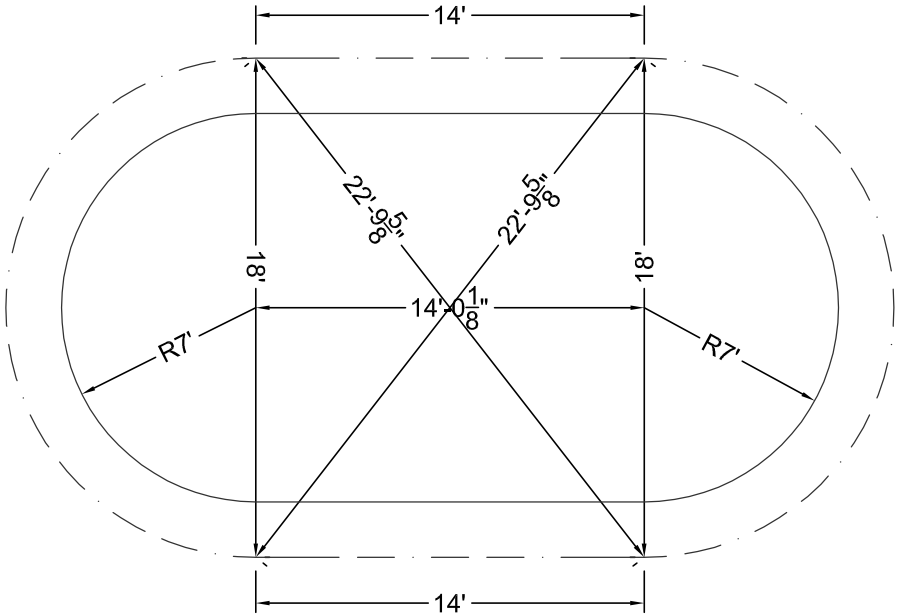

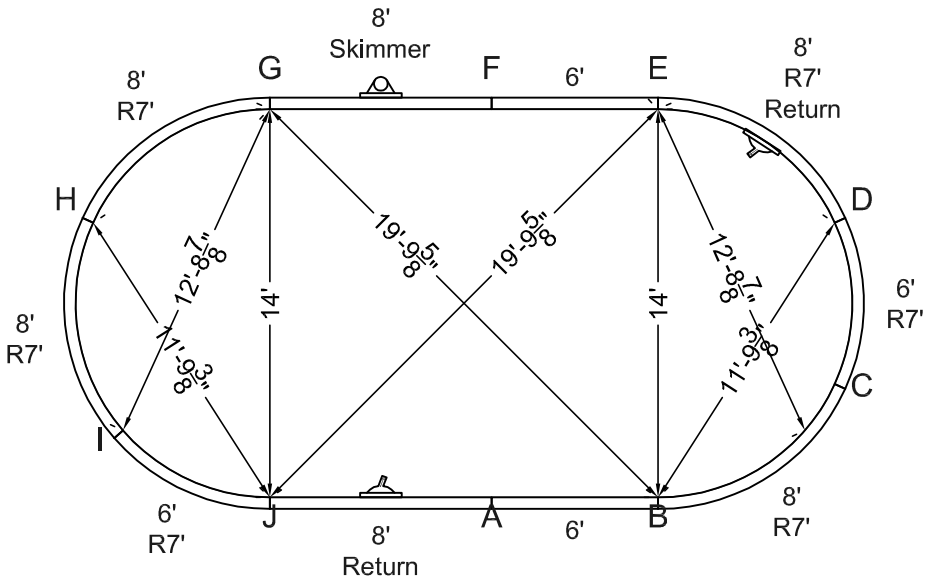

STEEL CHECK

KIT REF# MNT1428-OV-42

MEGNA POOLS
Megna Plastic Packaging Corp.

SIZE:	SHAPE:	HAND:	DWG#
15' x 26'-5"	OVAL	N/A	15X26 A

PER.:	70'	S.A.:	348.21 ft²	VOL.:	0.00 gal.us
PER.:	21.34 m	S.A.:	32.35 m²	VOL.:	0.00 liters

DATE: 23/11/2010 | APPROVED:
DRAWN BY: NM

ALL DIMENSIONS ARE FINISHED

MANUFACTURING NOTICE

1- DUE TO UNCERTAIN GROUND VARIANCES POOL WALLS MUST BE INSTALLED A MINIMUM OF 6 INCHES BELOW GRADE
2- BUTTRESS SUPPORTS MUST BE FULLY SUPPORTED INCLUDING SONO TUBES BELOW FROST LEVEL. (4 FEET)
3- 12 INCH CONCRETE COLLAR MINIMUM 24 INCHES PAST STRAIGHT SIDES.
4- FILL REMOVED, TO BE SLOPED AROUND OUTSIDE PERIMETER.

NONCOMPLIANCE VOIDS WARRANTY

5- ALL TOP RAIL POOLS AVAILABLE IN 42" WITH 5" TOP RAIL AND 48" WITH 3" TOP RAIL.

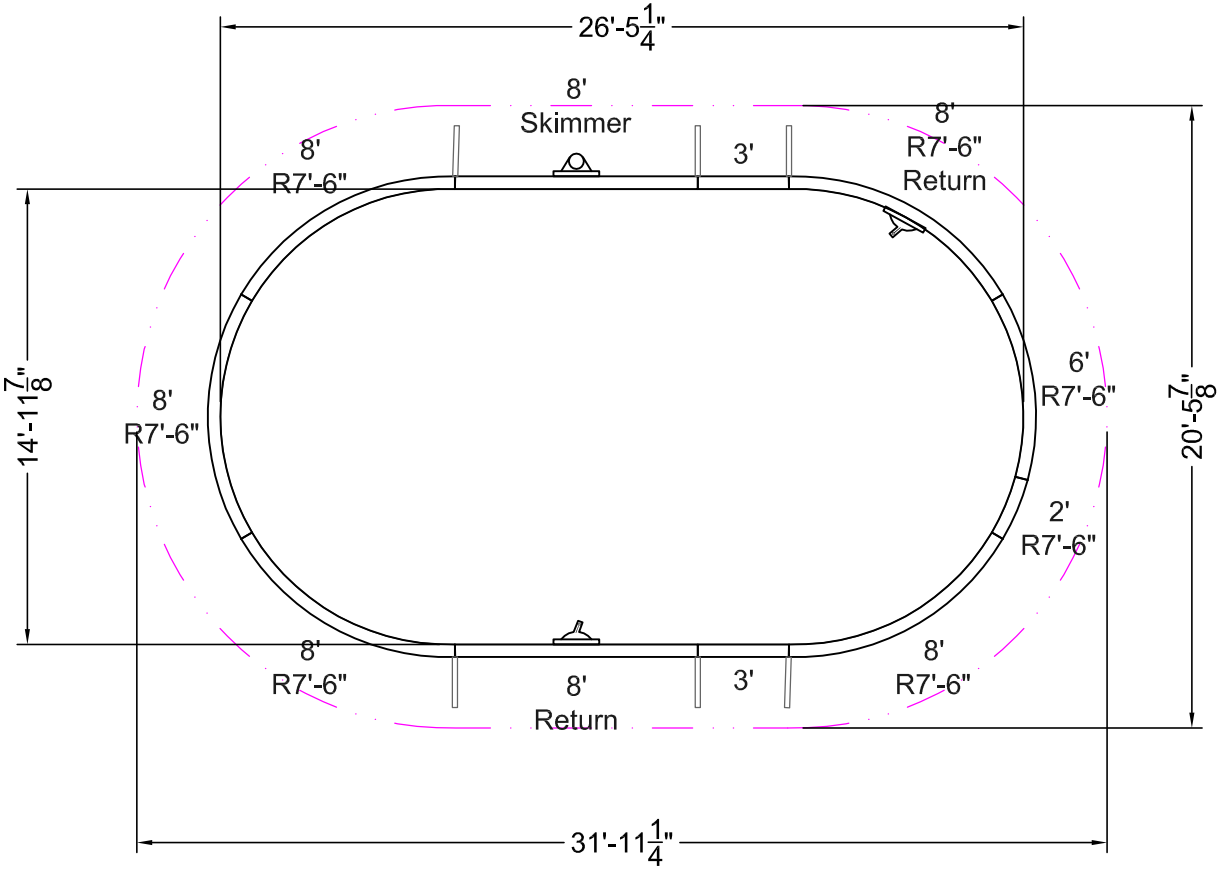

DESCRIPTION	QTY
3' STR	2
8' STR RTN	1
8' STR SKM	1
2'x7'-6" RAD	1
6'x7'-6" RAD	1
8'x7'-6" RAD	4
8'x7'-6" RAD RTN	1
BUTTRESS SUPPORT	6
STD HARDWARE PACK	1

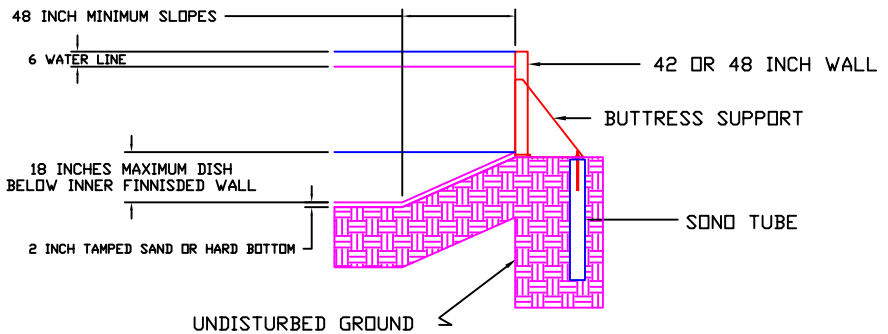

ONGROUND TOP RAIL POOLS

KIT REF# MNT1526-OV-42

MEGNA POOLS
Megna Plastic Packaging Corp.

SIZE:	SHAPE:	HAND:	DWG#
15' x 26'-5"	OVAL	N/A	15X26 B

PER.:	70'	S.A.:	348.21 ft²	VOL.:	0.00 gal.us	DATE: 23/11/2010	APPROVED:
PER.:	21.34 m	S.A.:	32.35 m²	VOL.:	0.00 liters	DRAWN BY: NM	

STAKE OUT

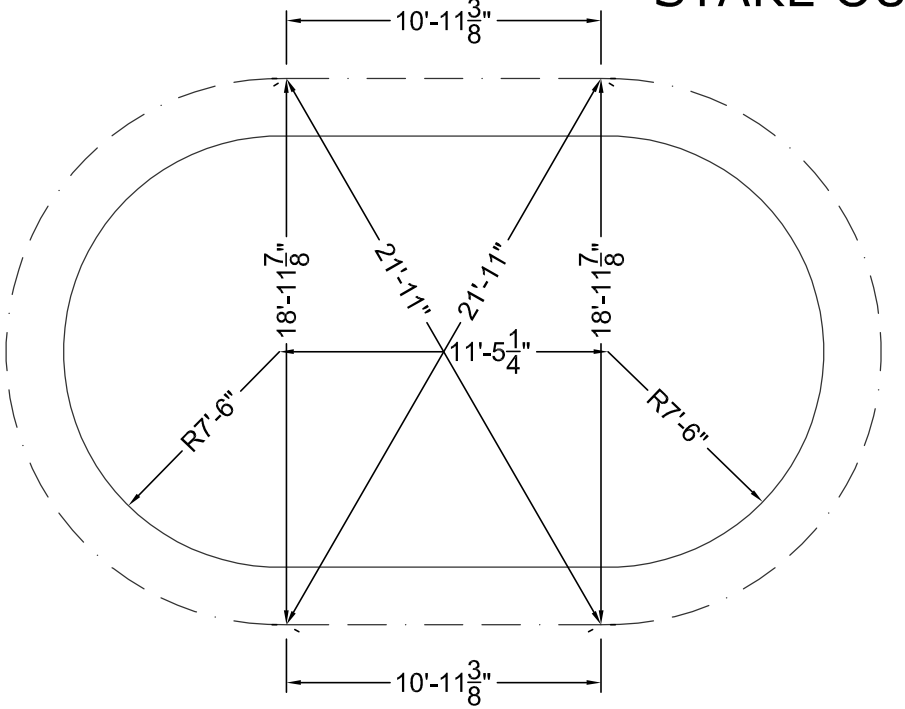

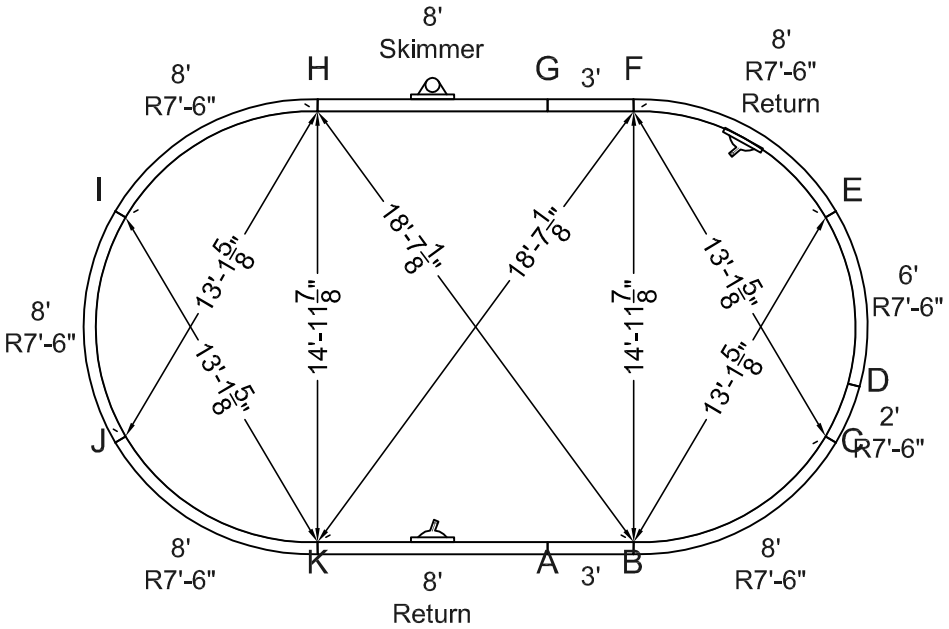

STEEL CHECK

KIT REF# MNT1526-OV-42

MEGNA POOLS
Megna Plastic Packaging Corp.

SIZE:	SHAPE:	HAND:	DWG#
15' x 29'-5"	OVAL	N/A	15X30 A

PER.:	76'	S.A.:	393.19 ft²	VOL.:	0.00 gal.us
PER.:	23.16 m	S.A.:	36.53 m²	VOL.:	0.00 liters

DATE: 23/11/2010 | APPROVED:
DRAWN BY: NM

ALL DIMENSIONS ARE FINISHED

MANUFACTURING NOTICE

1- DUE TO UNCERTAIN GROUND VARIANCES POOL WALLS MUST BE INSTALLED A MINIMUM OF 6 INCHES BELOW GRADE
2- BUTTRESS SUPPORTS MUST BE FULLY SUPPORTED INCLUDING SONO TUBES BELOW FROST LEVEL. (4 FEET)
3- 12 INCH CONCRETE COLLAR MINIMUM 24 INCHES PAST STRAIGHT SIDES.
4- FILL REMOVED, TO BE SLOPED AROUND OUTSIDE PERIMETER.

NONCOMPLIANCE VOIDS WARRANTY

5- ALL TOP RAIL POOLS AVAILABLE IN 42" WITH 5" TOP RAIL AND 48" WITH 3" TOP RAIL.

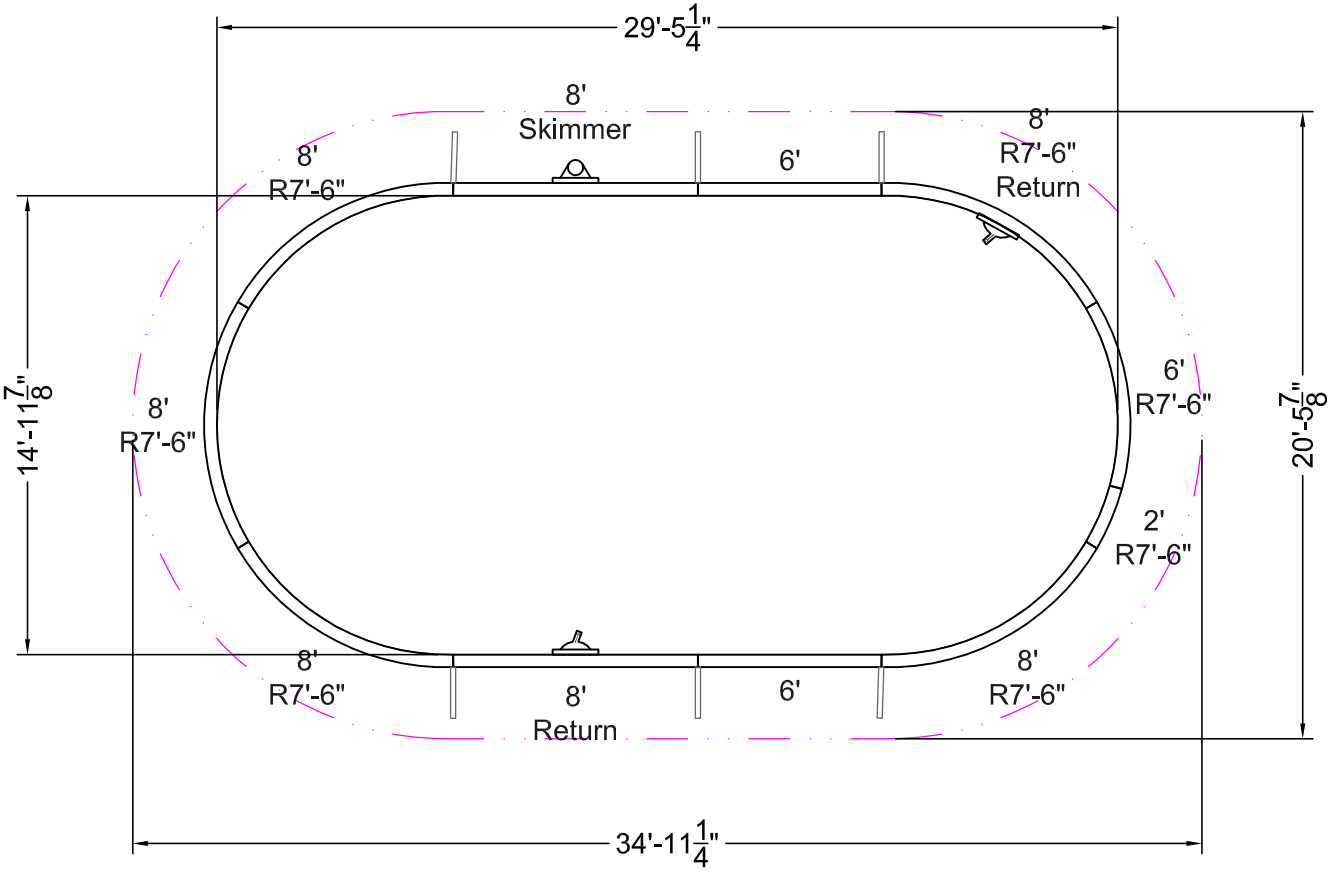

DESCRIPTION	QTY
6' STR	2
8' STR RTN	1
8' STR SKM	1
2'x7'-6" RAD	1
6'x7'-6" RAD	1
8'x7'-6" RAD	4
8'x7'-6" RAD RTN	1
BUTTRESS SUPPORT	6
STD HARDWARE PACK	1

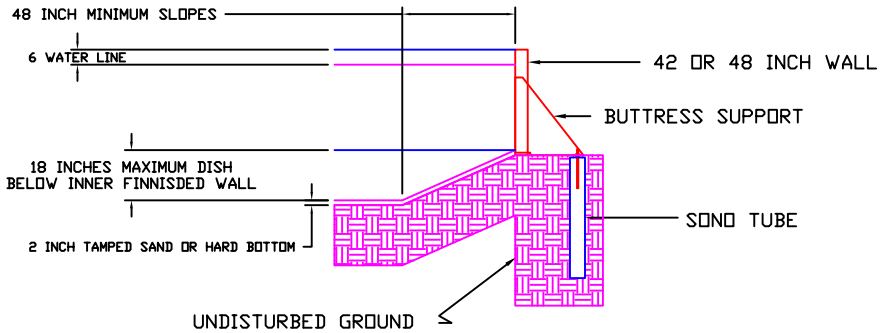

ONGROUND TOP RAIL POOLS

KIT REF# MNT1530-OV-42

MEGNA POOLS
Megna Plastic Packaging Corp.

SIZE: 15' x 29'-5"	SHAPE: OVAL		HAND: N/A	DWG# 15X30 B
PER.: 76'	S.A.: 393.19 ft²	VOL.: 0.00 gal.us	DATE: 23/11/2010	APPROVED:
PER.: 23.16 m	S.A.: 36.53 m²	VOL.: 0.00 liters	DRAWN BY: NM	

STAKE OUT

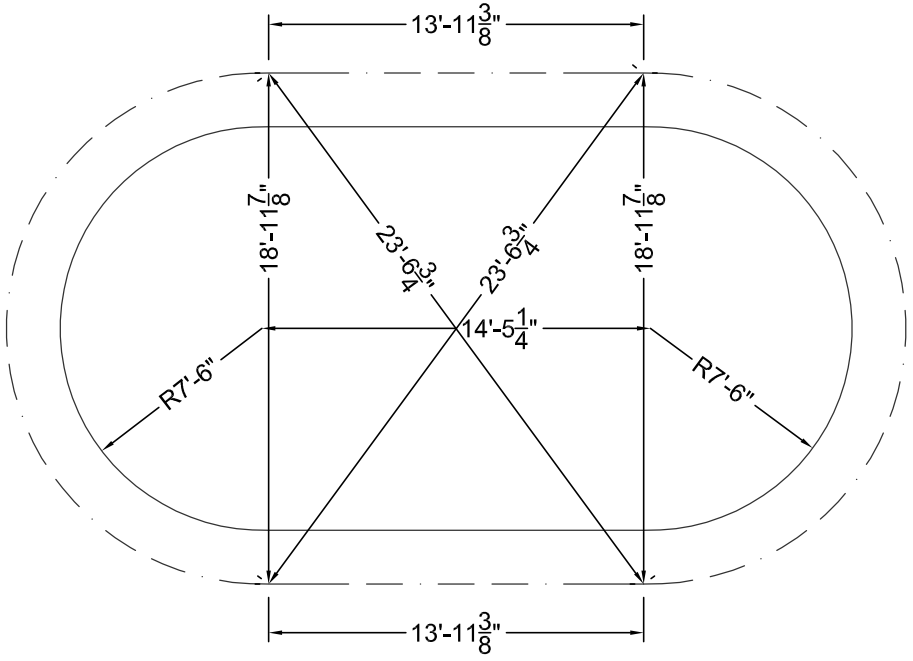

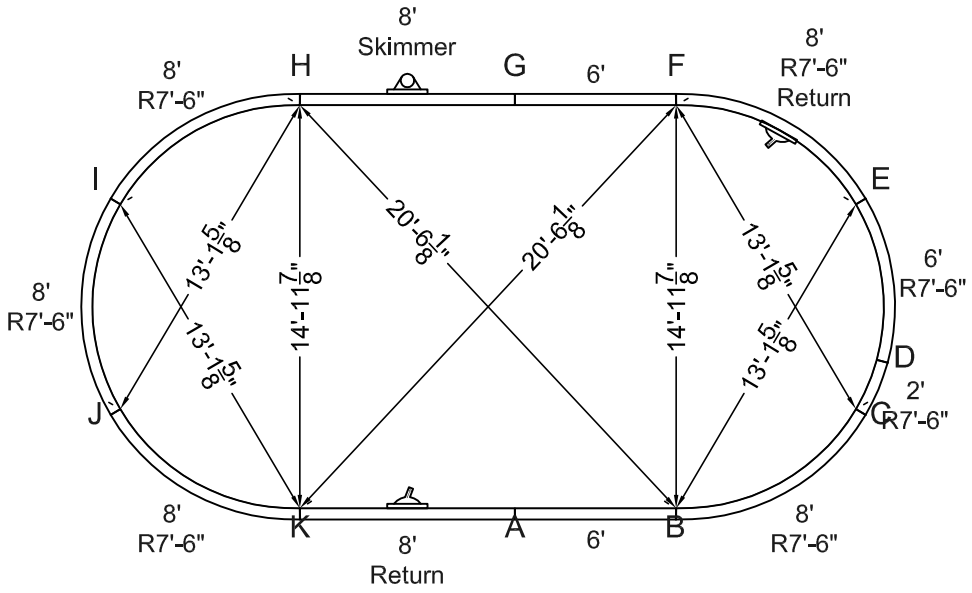

STEEL CHECK

KIT REF# MNT1530-OV-42

MEGNA POOLS
Megna Plastic Packaging Corp.

SIZE: 16' x 31'-10"	SHAPE: OVAL		HAND: N/A	DWG# 16X32 A
PER.: 82'	S.A.: 454.93 ft²	VOL.: 0.00 gal.us	DATE: 16/12/2010	APPROVED:
PER.: 24.99 m	S.A.: 42.26 m²	VOL.: 0.00 liters	DRAWN BY: NM	

ALL DIMENSIONS ARE FINISHED

MANUFACTURING NOTICE

1- DUE TO UNCERTAIN GROUND VARIANCES POOL WALLS MUST BE INSTALLED A MINIMUM OF 6 INCHES BELOW GRADE
2- BUTTRESS SUPPORTS MUST BE FULLY SUPPORTED INCLUDING SONO TUBES BELOW FROST LEVEL. (4 FEET)
3- 12 INCH CONCRETE COLLAR MINIMUM 24 INCHES PAST STRAIGHT SIDES.
4- FILL REMOVED, TO BE SLOPED AROUND OUTSIDE PERIMETER.

NONCOMPLIANCE VOIDS WARRANTY

5- ALL TOP RAIL POOLS AVAILABLE IN 42" WITH 5" TOP RAIL AND 48" WITH 3" TOP RAIL.

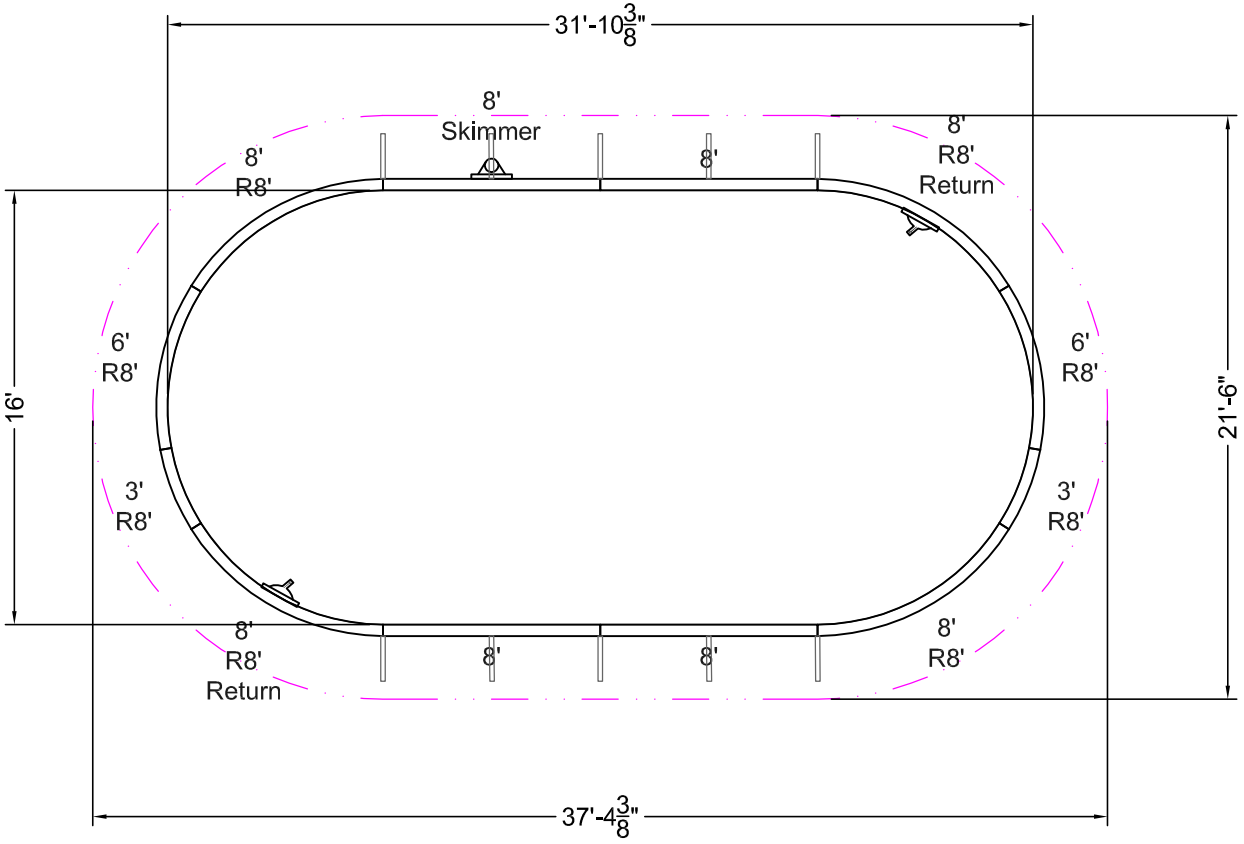

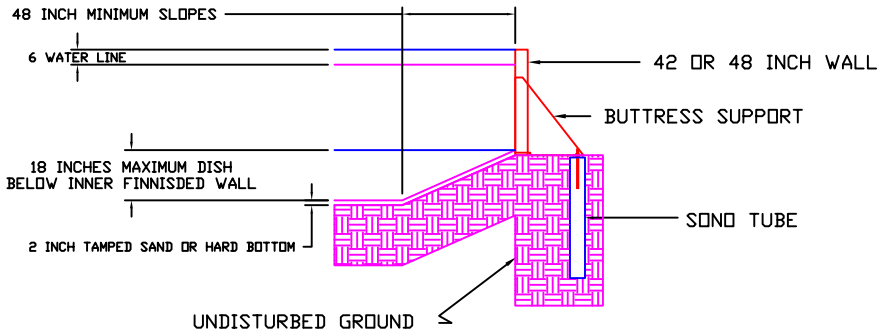

DESCRIPTION	QTY
8' STR	3
8' STR SKM	1
3'x8' RAD	2
6'x8' RAD	2
8'x8' RAD	2
8'x8' RAD RTN	2
BUTTRESS SUPPORT	10
STD HARDWARE PACK	1

ONGROUND TOP RAIL POOLS

KIT REF# MNT1632-OV-42

MEGNA POOLS
Megna Plastic Packaging Corp.

SIZE: 16' x 31'-10"		SHAPE: OVAL				HAND: N/A	DWG# 16X32 B
PER.:	82'	S.A.:	454.93 ft²	VOL.:	0.00 gal.us	DATE: 16/12/2010	APPROVED:
PER.:	24.99 m	S.A.:	42.26 m²	VOL.:	0.00 liters	DRAWN BY: NM	

STAKE OUT

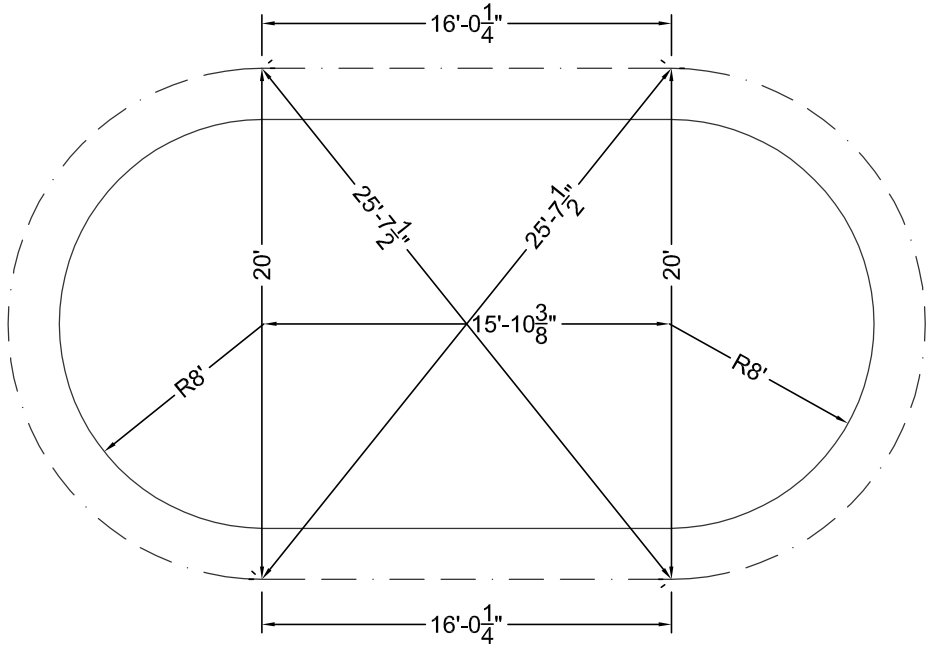

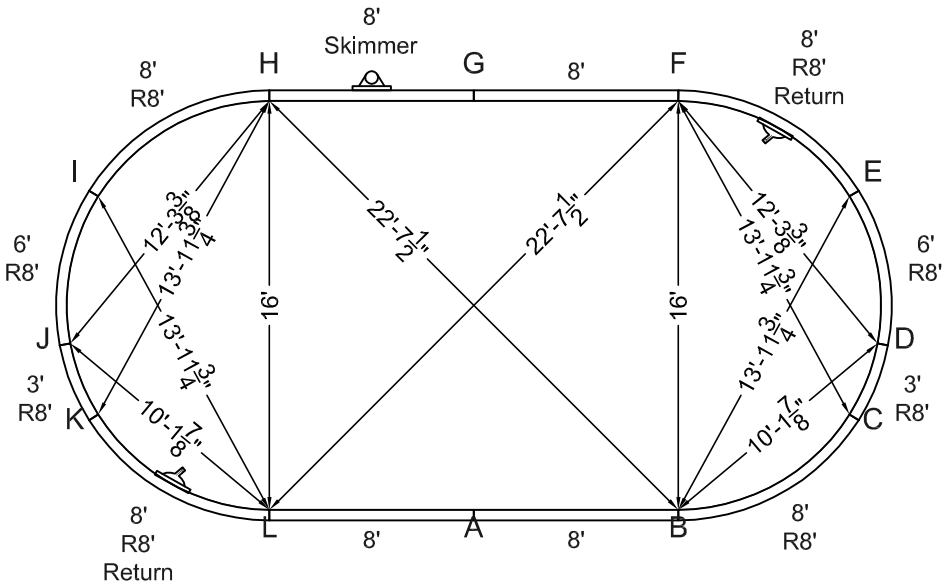

STEEL CHECK

KIT REF# MNT1632-OV-42

MEGNA POOLS
Megna Plastic Packaging Corp.

SIZE:	SHAPE:	HAND:	DWG#
17' x 30'-4"	OVAL	N/A	17X31 A

PER.:	80'	S.A.:	452.99 ft²	VOL.:	0.00 gal.us
PER.:	24.38 m	S.A.:	42.08 m²	VOL.:	0.00 liters

DATE: 23/11/2010 | APPROVED:

DRAWN BY: NM

ALL DIMENSIONS ARE FINISHED

MANUFACTURING NOTICE

1- DUE TO UNCERTAIN GROUND VARIANCES POOL WALLS MUST BE INSTALLED A MINIMUM OF 6 INCHES BELOW GRADE
2- BUTTRESS SUPPORTS MUST BE FULLY SUPPORTED INCLUDING SONO TUBES BELOW FROST LEVEL. (4 FEET)
3- 12 INCH CONCRETE COLLAR MINIMUM 24 INCHES PAST STRAIGHT SIDES.
4- FILL REMOVED, TO BE SLOPED AROUND OUTSIDE PERIMETER.

NONCOMPLIANCE VOIDS WARRANTY

5- ALL TOP RAIL POOLS AVAILABLE IN 42" WITH 5" TOP RAIL AND 48" WITH 3" TOP RAIL.

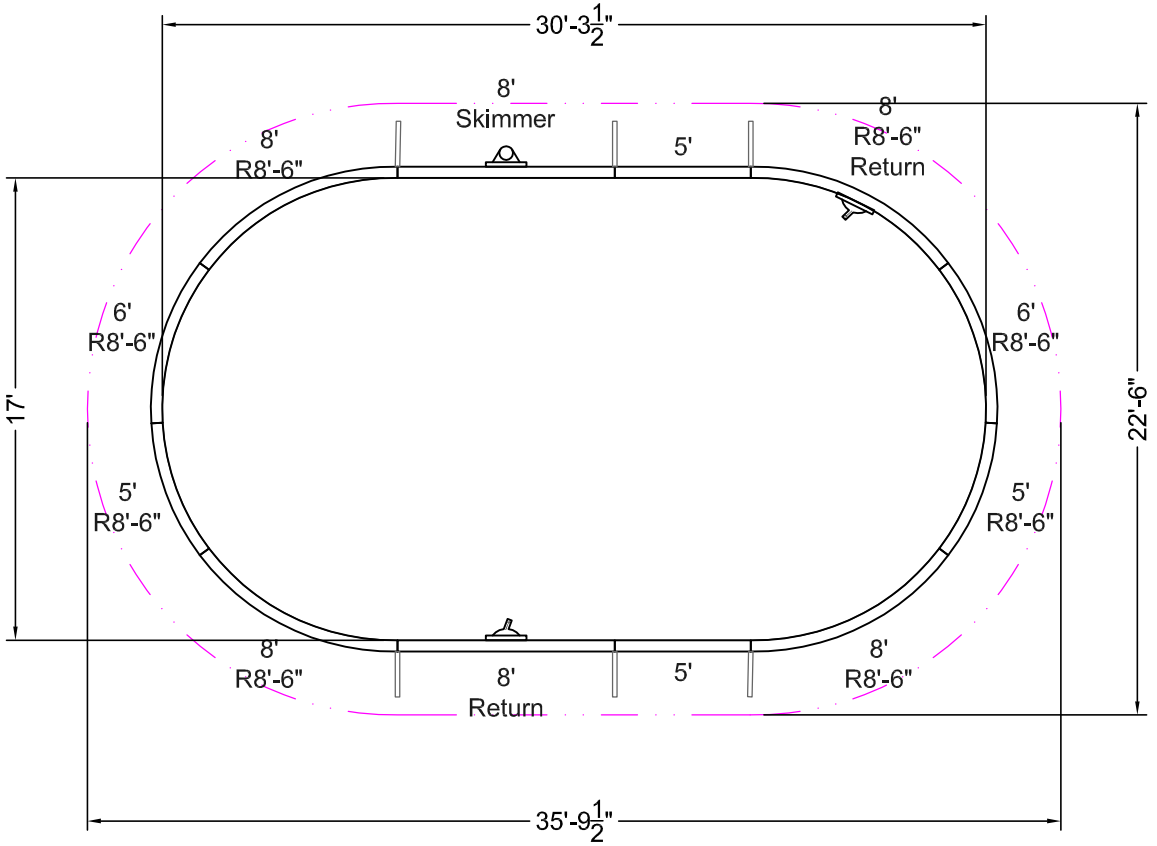

DESCRIPTION	QTY
5' STR	2
8' STR RTN	1
8' STR SKM	1
5'x8'-6" RAD	2
6'x8'-6" RAD	2
8'x8'-6" RAD	3
8'x8'-6" RAD RTN	1
BUTTRESS SUPPORT	6
STD HARDWARE PACK	1

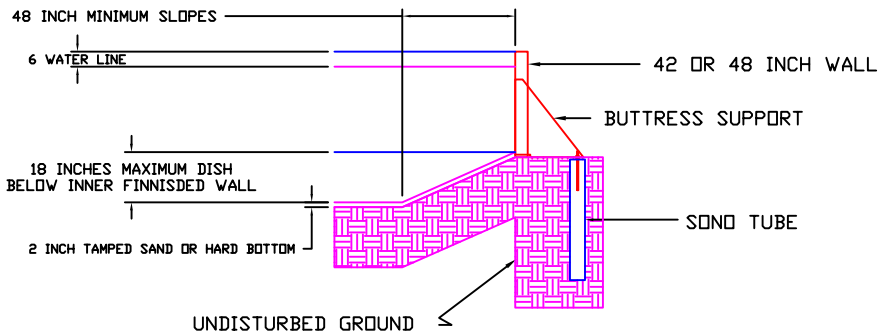

ONGROUND TOP RAIL POOLS

KIT REF# MNT1731-OV-42

MEGNA POOLS
Megna Plastic Packaging Corp.

SIZE:	SHAPE:	HAND:	DWG#
17' x 30'-4"	OVAL	N/A	17X31 B

PER.:	80'	S.A.:	452.99 ft²	VOL.:	0.00 gal.us
PER.:	24.38 m	S.A.:	42.08 m²	VOL.:	0.00 liters

DATE: 23/11/2010
DRAWN BY: NM
APPROVED:

STAKE OUT

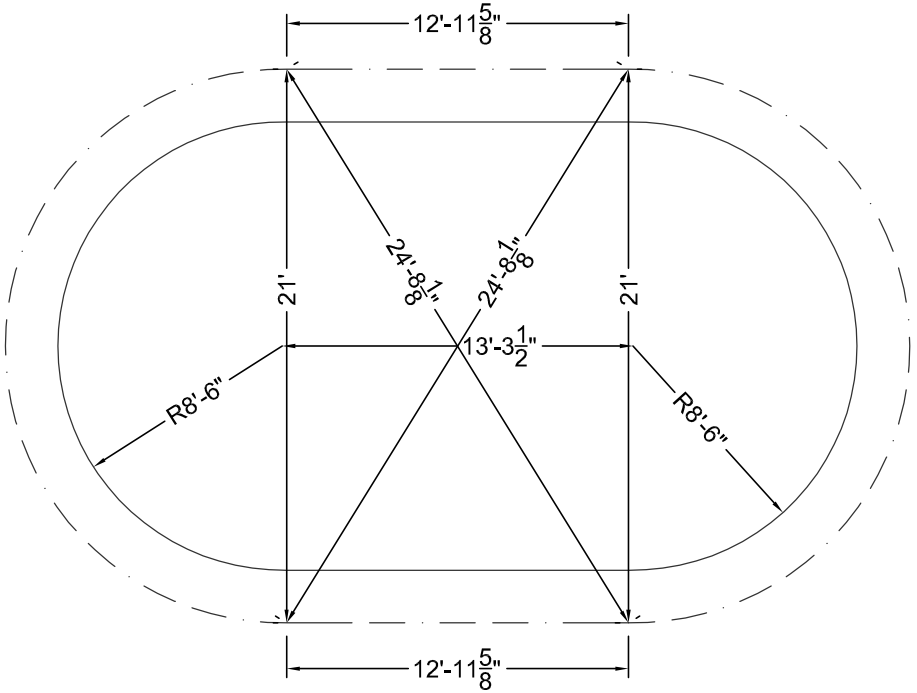

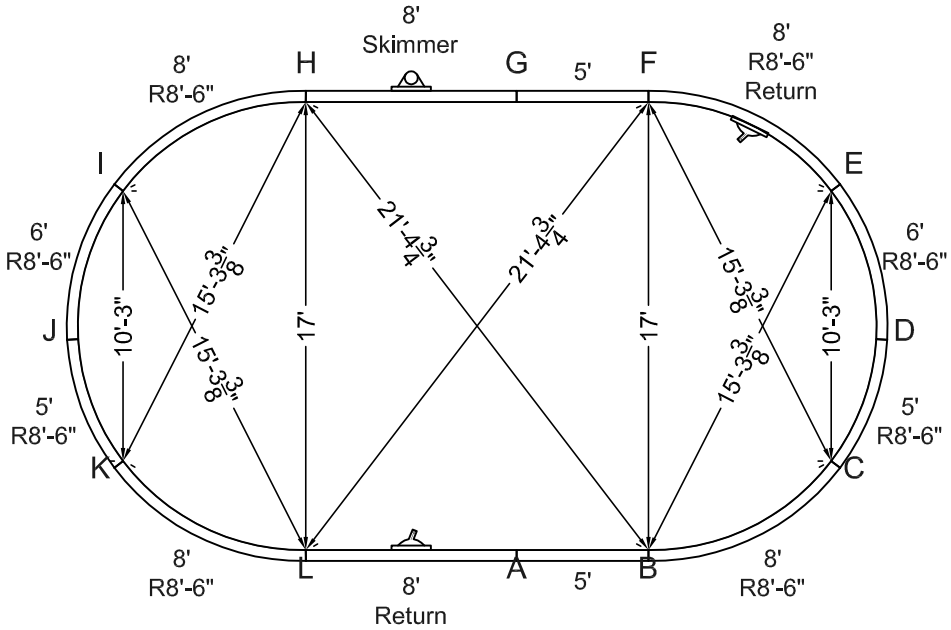

STEEL CHECK

KIT REF# MNT1731-OV-42

MEGNA POOLS
Megna Plastic Packaging Corp.

SIZE:	SHAPE:	HAND:	DWG#
17' x 32'-4"	OVAL	N/A	17X33 A

PER.:	84'	S.A.:	486.98 ft²	VOL.:	0.00 gal.us
PER.:	25.60 m	S.A.:	45.24 m²	VOL.:	0.00 liters

DATE: 23/11/2010 | APPROVED:
DRAWN BY: NM

ALL DIMENSIONS ARE FINISHED

MANUFACTURING NOTICE

1- DUE TO UNCERTAIN GROUND VARIANCES POOL WALLS MUST BE INSTALLED A MINIMUM OF 6 INCHES BELOW GRADE
2- BUTTRESS SUPPORTS MUST BE FULLY SUPPORTED INCLUDING SONO TUBES BELOW FROST LEVEL. (4 FEET)
3- 12 INCH CONCRETE COLLAR MINIMUM 24 INCHES PAST STRAIGHT SIDES.
4- FILL REMOVED, TO BE SLOPED AROUND OUTSIDE PERIMETER.

NONCOMPLIANCE VOIDS WARRANTY

5- ALL TOP RAIL POOLS AVAILABLE IN 42" WITH 5" TOP RAIL AND 48" WITH 3" TOP RAIL.

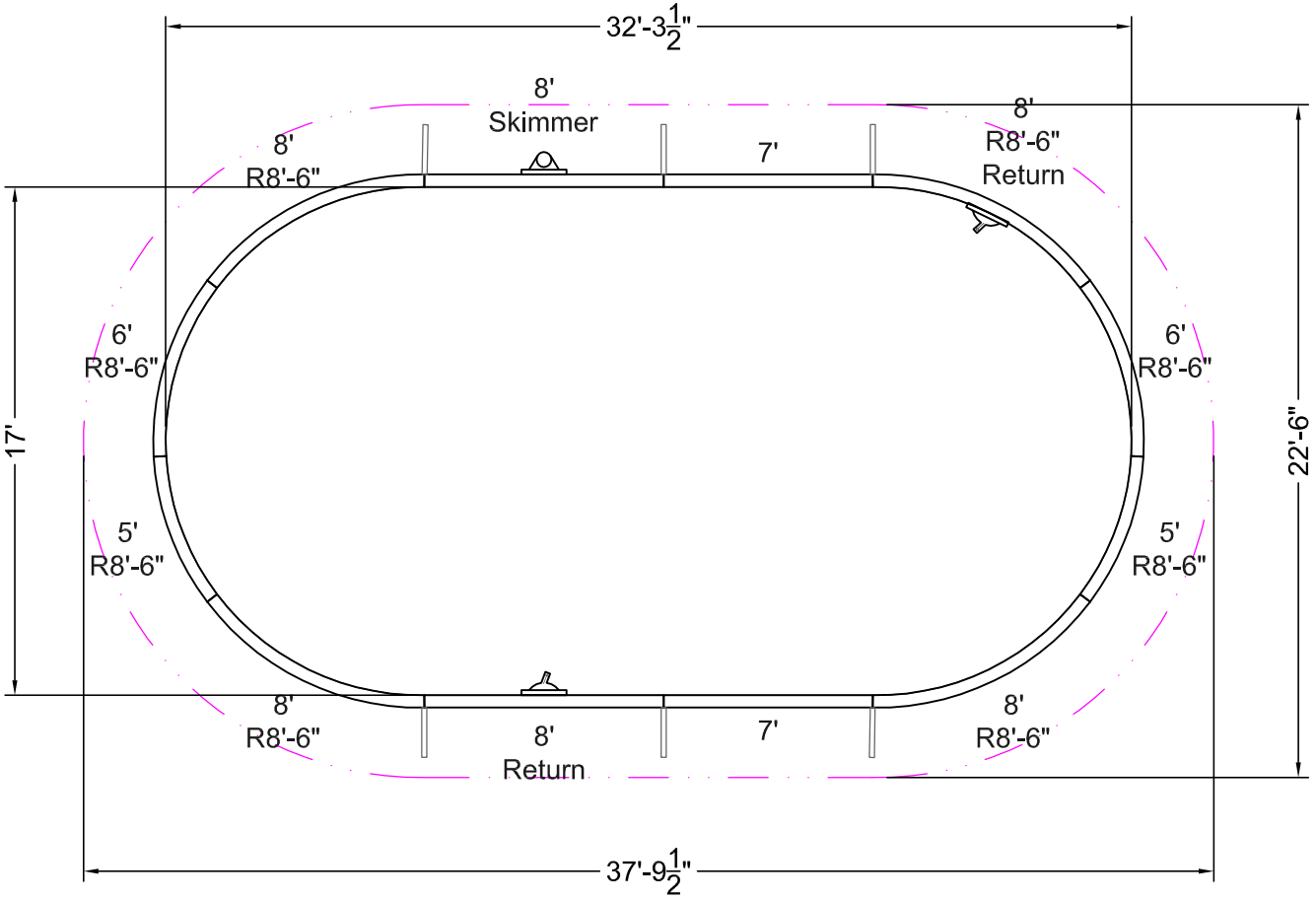

DESCRIPTION	QTY
7' STR	2
8' STR RTN	1
8' STR SKM	1
5'x8'-6" RAD	2
6'x8'-6" RAD	2
8'x8'-6" RAD	3
8'x8'-6" RAD RTN	1
BUTTRESS SUPPORT	6
STD HARDWARE PACK	1

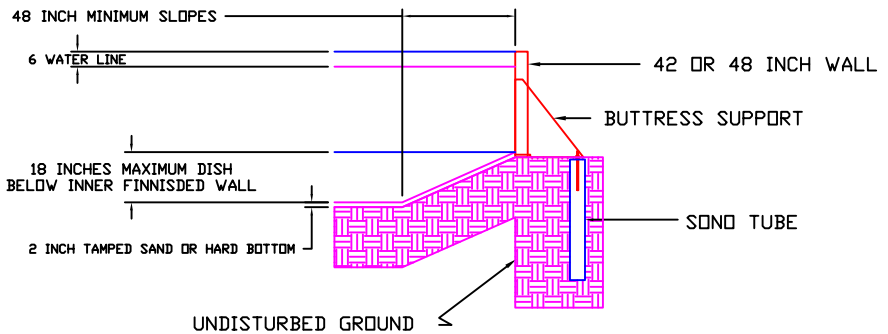

ONGROUND TOP RAIL POOLS

KIT REF# MNT1733-OV-42

MEGNA POOLS
Megna Plastic Packaging Corp.

SIZE:	SHAPE:		HAND:	DWG#	
17' x 32'-4"	OVAL		N/A	17X33	B
PER.: 84'	S.A.: 486.98 ft²	VOL.: 0.00 gal.us	DATE: 23/11/2010	APPROVED:	
PER.: 25.60 m	S.A.: 45.24 m²	VOL.: 0.00 liters	DRAWN BY: NM		

STAKE OUT

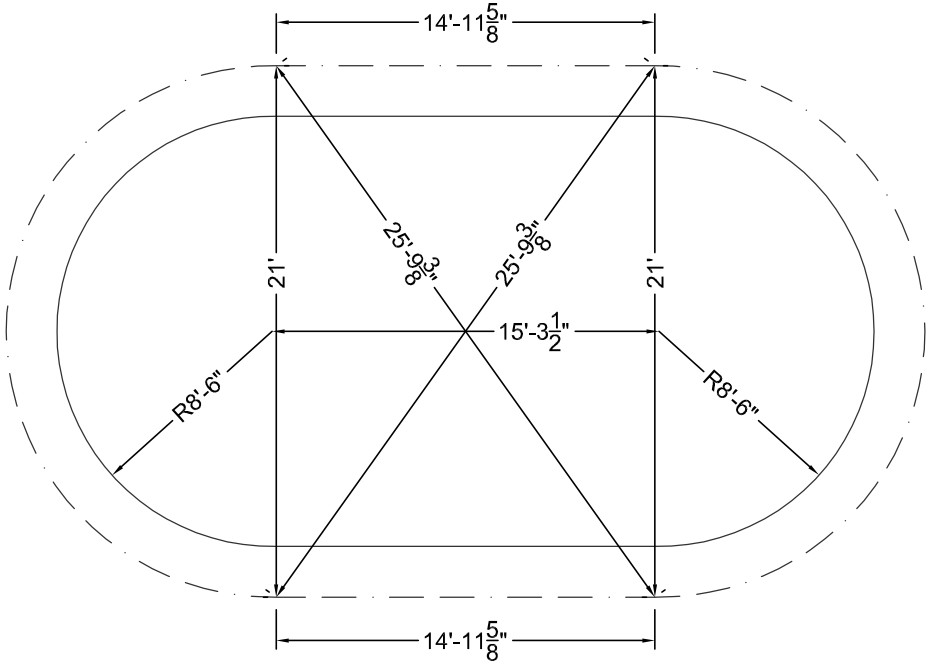

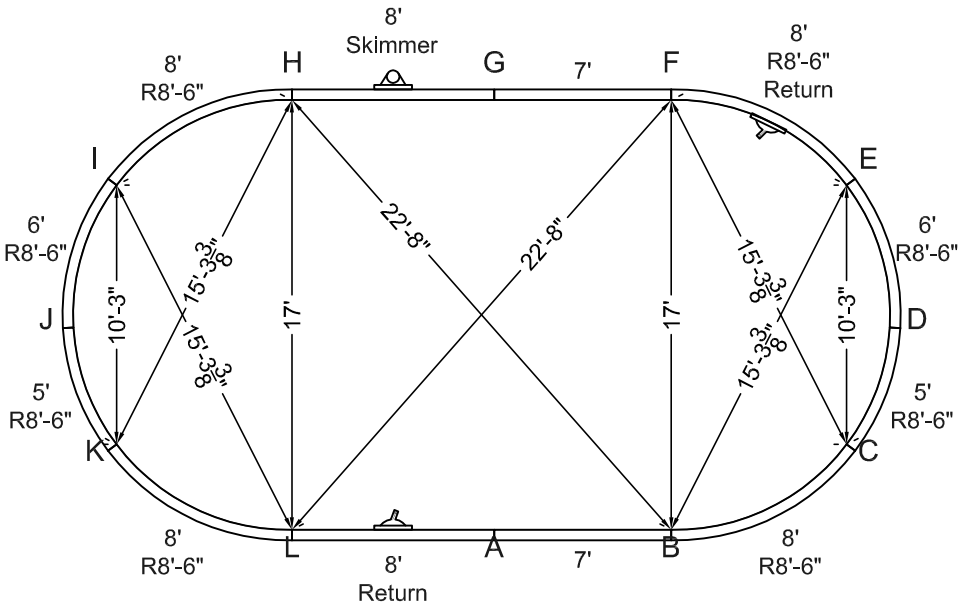

STEEL CHECK

KIT REF# MNT1733-OV-42

MEGNA POOLS
Megna Plastic Packaging Corp.

SIZE:	SHAPE:	HAND:	DWG#
11'-11" x 11'-11"	ROUND/OG	N/A	12FT A

PER.:	37'-6"	S.A.:	111.91 ft²	VOL.:	0.00 gal.us
PER.:	11.43 m	S.A.:	10.40 m²	VOL.:	0.00 liters

DATE: 17/01/2011 | APPROVED:
DRAWN BY: NM

ALL DIMENSIONS ARE FINISHED

MANUFACTURING NOTICE

1- DUE TO UNCERTAIN GROUND VARIANCES POOL WALLS MUST BE INSTALLED A MINIMUM OF 6 INCHES BELOW GRADE
2- BUTTRESS SUPPORTS MUST BE FULLY SUPPORTED INCLUDING SONO TUBES BELOW FROST LEVEL. (4 FEET)
3- 12 INCH CONCRETE COLLAR MINIMUM 24 INCHES PAST STRAIGHT SIDES.
4- FILL REMOVED, TO BE SLOPED AROUND OUTSIDE PERIMETER.

NONCOMPLIANCE VOIDS WARRANTY

5- ALL TOP RAIL POOLS AVAILABLE IN 42" WITH 5" TOP RAIL AND 48" WITH 3" TOP RAIL.

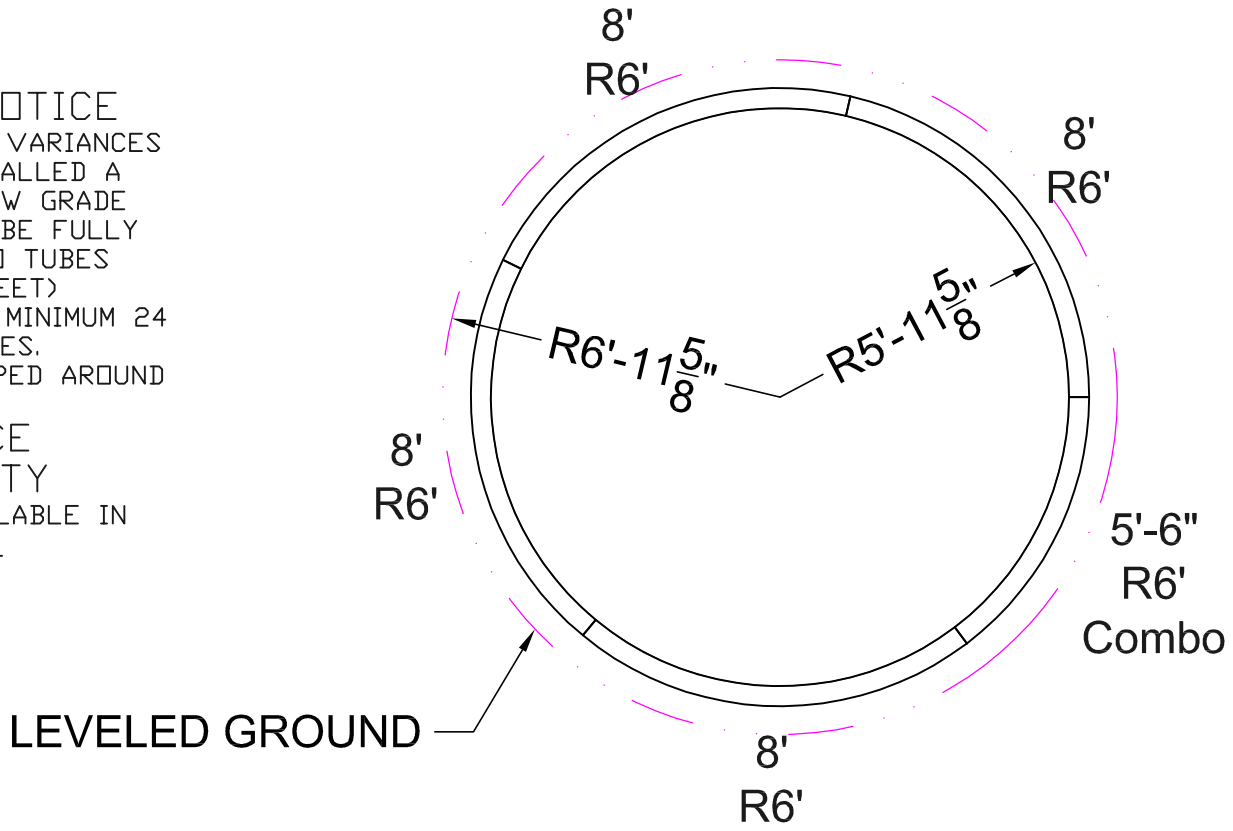

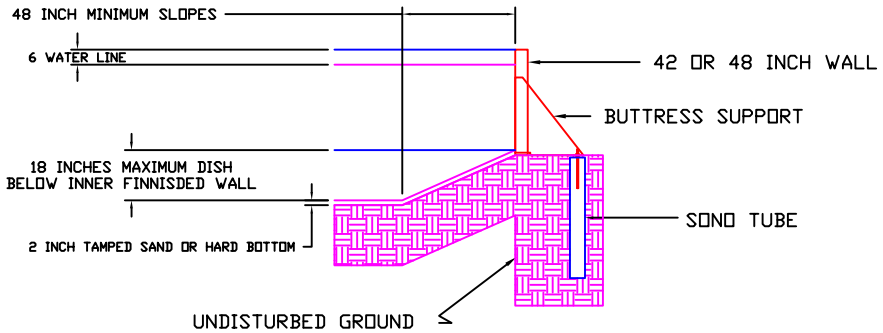

DESCRIPTION	QTY
5'-6"x6' RAD COMBO	1
8'x6' RAD	4
STD HARDWARE PACK	1

ONGROUND TOP RAIL POOLS

KIT REF# MNT1111-RD-42

MEGNA POOLS
Megna Plastic Packaging Corp.

SIZE: 11'-11" x 11'-11"		SHAPE: ROUND/OG			HAND: N/A	DWG# 12FT B	
PER.:	37'-6"	S.A.:	111.91 ft²	VOL.: 0.00 gal.us	DATE: 17/01/2011	APPROVED:	
PER.:	11.43 m	S.A.:	10.40 m²	VOL.: 0.00 liters	DRAWN BY: NM		

STAKE OUT

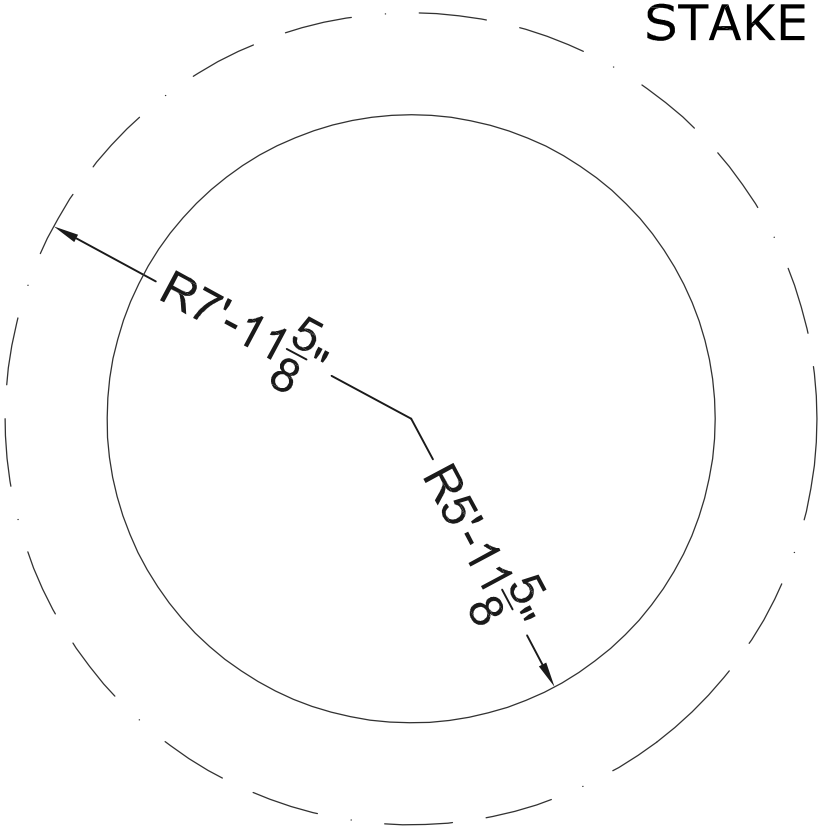

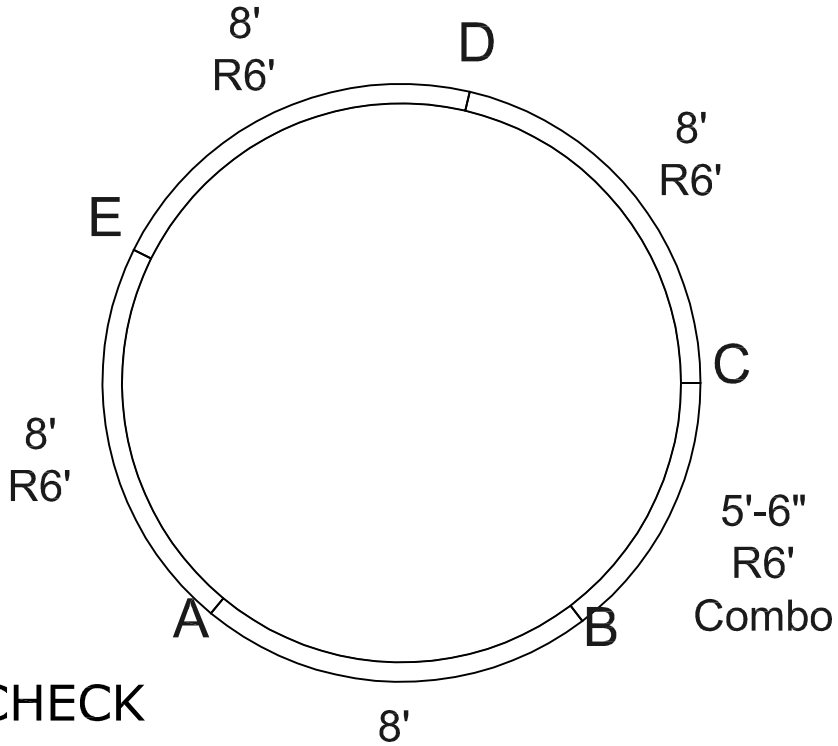

STEEL CHECK

KIT REF# MNT1111-RD-42

MEGNA POOLS
Megna Plastic Packaging Corp.

SIZE:	SHAPE:	HAND:	DWG#
15'-3" x 15'-3"	ROUND/OG	N/A	15FT A

PER.:	48'	S.A.:	183.35 ft²	VOL.:	0.00 gal.us	DATE: 17/01/2011
PER.:	14.63 m	S.A.:	17.03 m²	VOL.:	0.00 liters	DRAWN BY: NM

APPROVED:

ALL DIMENSIONS ARE FINISHED

MANUFACTURING NOTICE

1- DUE TO UNCERTAIN GROUND VARIANCES POOL WALLS MUST BE INSTALLED A MINIMUM OF 6 INCHES BELOW GRADE
2- BUTTRESS SUPPORTS MUST BE FULLY SUPPORTED INCLUDING SONO TUBES BELOW FROST LEVEL. (4 FEET)
3- 12 INCH CONCRETE COLLAR MINIMUM 24 INCHES PAST STRAIGHT SIDES.
4- FILL REMOVED, TO BE SLOPED AROUND OUTSIDE PERIMETER.

NONCOMPLIANCE VOIDS WARRANTY

5- ALL TOP RAIL POOLS AVAILABLE IN 42" WITH 5" TOP RAIL AND 48" WITH 3" TOP RAIL.

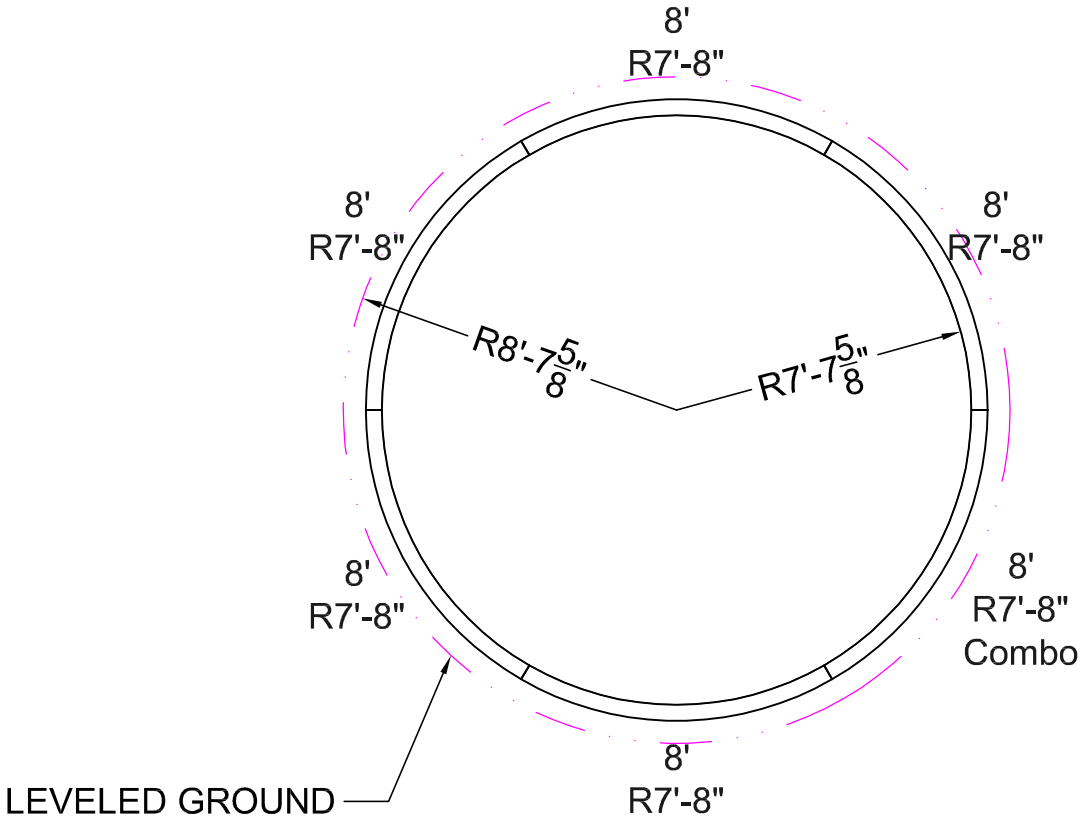

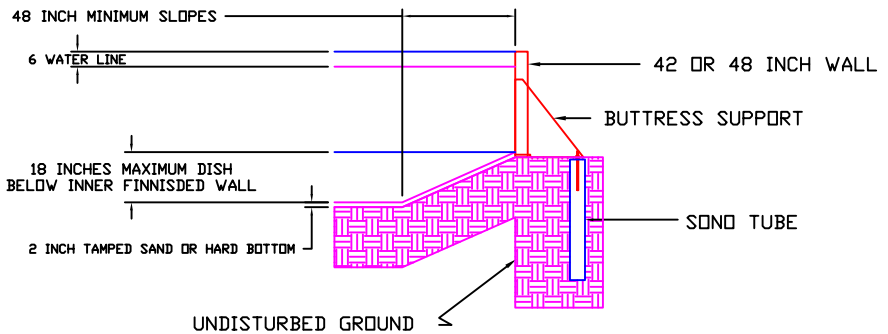

DESCRIPTION	QTY
8'x7'-8" RAD	5
8'x7'-8" RAD COMBO	1
STD HARDWARE PACK	1

ONGROUND TOP RAIL POOLS

KIT REF# MNT1503-RD-42

MEGNA POOLS

Megna Plastic Packaging Corp.

SIZE: 15'-3" x 15'-3"		SHAPE: ROUND/OG			HAND: N/A	DWG# 15FT B	
PER.:	48'	S.A.:	183.35 ft²	VOL.: 0.00 gal.us	DATE: 17/01/2011	APPROVED:	
PER.:	14.63 m	S.A.:	17.03 m²	VOL.: 0.00 liters	DRAWN BY: NM		

STAKE OUT

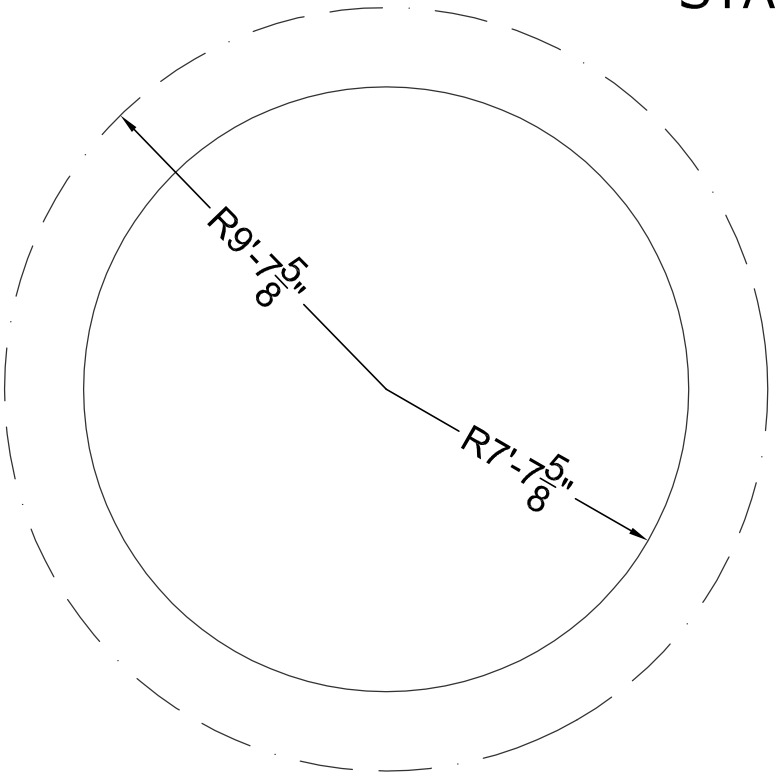

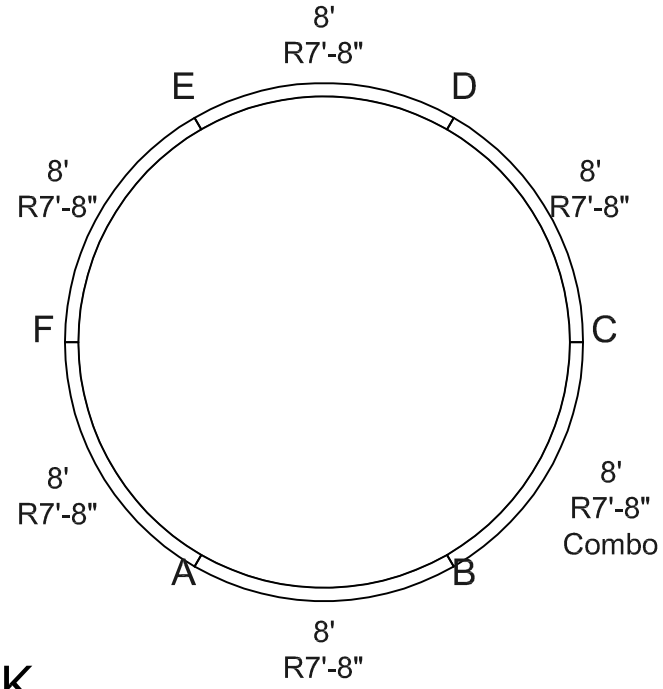

STEEL CHECK

KIT REF# MNT1503-RD-42

MEGNA POOLS
Megna Plastic Packaging Corp.

SIZE:	SHAPE:	HAND:	DWG#
17'-2" x 17'-2"	ROUND/OG	N/A	17FT A

PER.:	54'	S.A.:	232.05 ft²	VOL.:	0.00 gal.us
PER.:	16.46 m	S.A.:	21.56 m²	VOL.:	0.00 liters

DATE: 17/01/2011 | APPROVED:
DRAWN BY: NM

ALL DIMENSIONS ARE FINISHED

MANUFACTURING NOTICE

1- DUE TO UNCERTAIN GROUND VARIANCES POOL WALLS MUST BE INSTALLED A MINIMUM OF 6 INCHES BELOW GRADE
2- BUTTRESS SUPPORTS MUST BE FULLY SUPPORTED INCLUDING SONO TUBES BELOW FROST LEVEL. (4 FEET)
3- 12 INCH CONCRETE COLLAR MINIMUM 24 INCHES PAST STRAIGHT SIDES.
4- FILL REMOVED, TO BE SLOPED AROUND OUTSIDE PERIMETER.

NONCOMPLIANCE VOIDS WARRANTY

5- ALL TOP RAIL POOLS AVAILABLE IN
42" WITH 5" TOP RAIL AND
48" WITH 3" TOP RAIL.

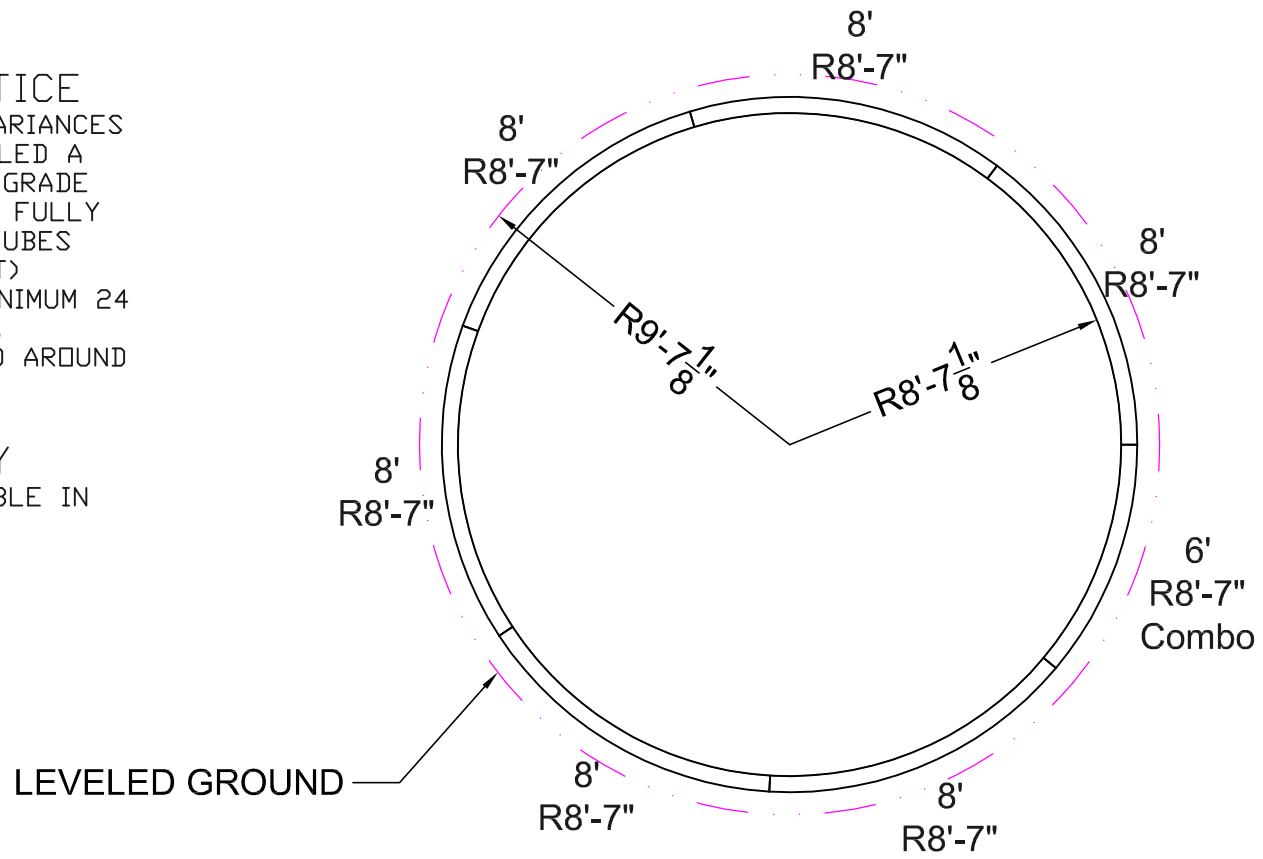

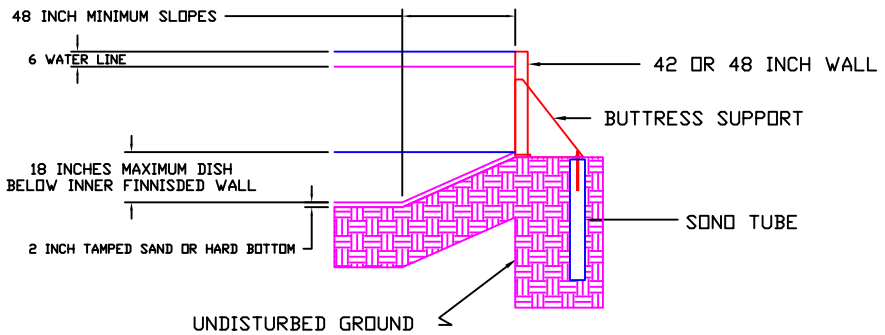

DESCRIPTION	QTY
6'x8'-7" RAD COMBO	1
8'x8'-7" RAD	6
STD HARDWARE PACK	1

ONGROUND TOP RAIL POOLS

KIT REF# MNT1702-RD-42

MEGNA POOLS
Megna Plastic Packaging Corp.

SIZE: 17'-2" x 17'-2"		SHAPE: ROUND/OG			HAND: N/A	DWG# 17FT B	
PER.:	54'	S.A.:	232.05 ft²	VOL.: 0.00 gal.us	DATE: 17/01/2011	APPROVED:	
PER.:	16.46 m	S.A.:	21.56 m²	VOL.: 0.00 liters	DRAWN BY: NM		

STAKE OUT

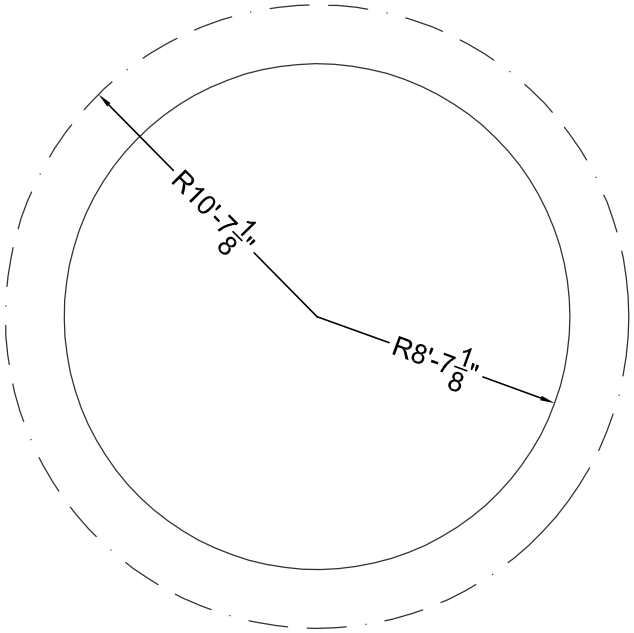

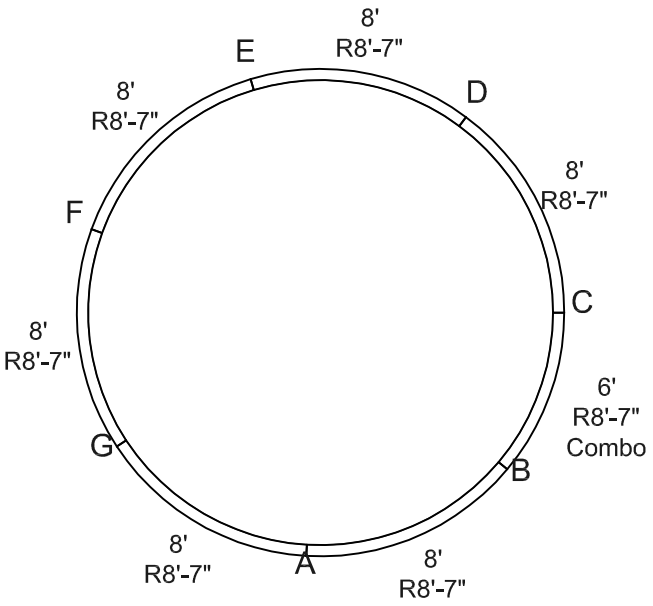

STEEL CHECK

KIT REF# MNT1702-RD-42

MEGNA POOLS
Megna Plastic Packaging Corp.

SIZE:	SHAPE:	HAND:	DWG#
17'-10" x 17'-10"	ROUND/OG	N/A	18FT A

PER.:	56'	S.A.:	249.55 ft²	VOL.:	0.00 gal.us
PER.:	17.07 m	S.A.:	23.18 m²	VOL.:	0.00 liters

DATE: 17/01/2011
DRAWN BY: NM
APPROVED:

ALL DIMENSIONS ARE FINISHED

MANUFACTURING NOTICE

1- DUE TO UNCERTAIN GROUND VARIANCES POOL WALLS MUST BE INSTALLED A MINIMUM OF 6 INCHES BELOW GRADE
2- BUTTRESS SUPPORTS MUST BE FULLY SUPPORTED INCLUDING SONO TUBES BELOW FROST LEVEL. (4 FEET)
3- 12 INCH CONCRETE COLLAR MINIMUM 24 INCHES PAST STRAIGHT SIDES.
4- FILL REMOVED, TO BE SLOPED AROUND OUTSIDE PERIMETER.

NONCOMPLIANCE VOIDS WARRANTY

5- ALL TOP RAIL POOLS AVAILABLE IN 42" WITH 5" TOP RAIL AND 48" WITH 3" TOP RAIL.

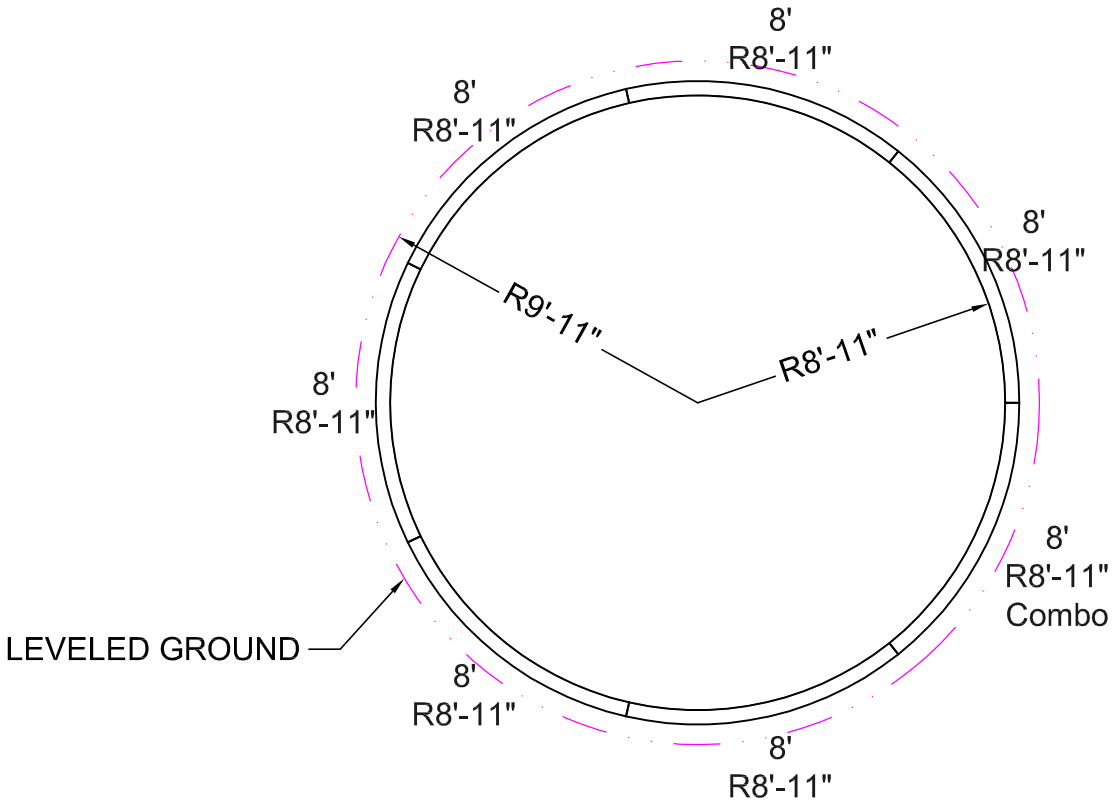

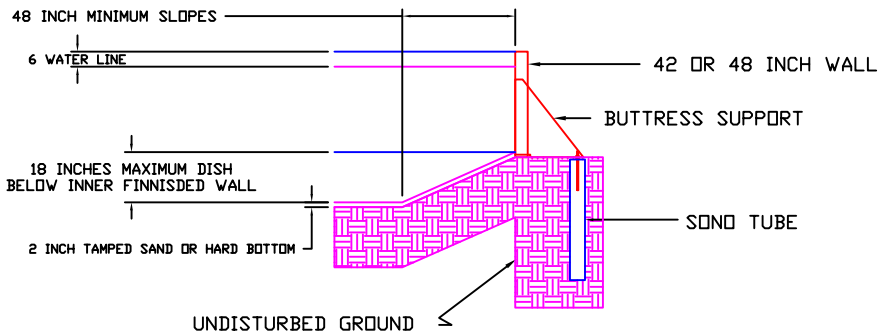

DESCRIPTION	QTY
8'x8'-11" RAD	6
8'x8'-11" RAD COMBO	1
STD HARDWARE PACK	1

ONGROUND TOP RAIL POOLS

KIT REF# MNT1710-RD-42

MEGNA POOLS
Megna Plastic Packaging Corp.

SIZE: 17'-10" x 17'-10"		SHAPE: ROUND/OG			HAND: N/A	DWG# 18FT B	
PER.:	56'	S.A.:	249.55 ft²	VOL.: 0.00 gal.us	DATE: 17/01/2011	APPROVED:	
PER.:	17.07 m	S.A.:	23.18 m²	VOL.: 0.00 liters	DRAWN BY: NM		

STAKE OUT

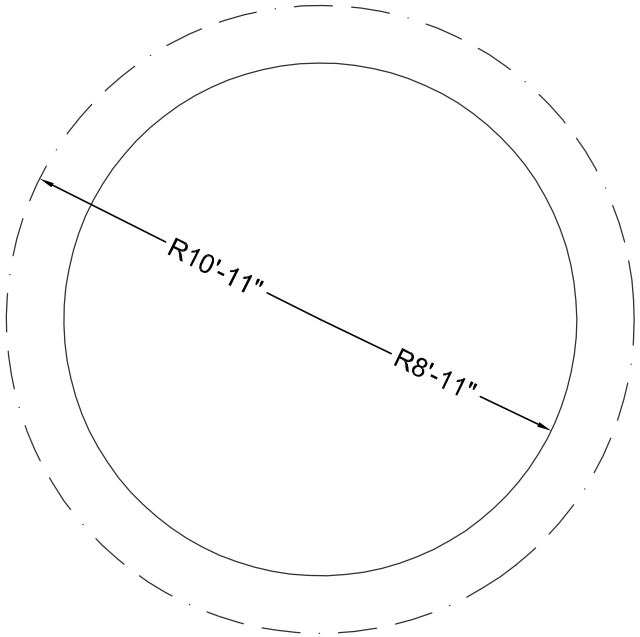

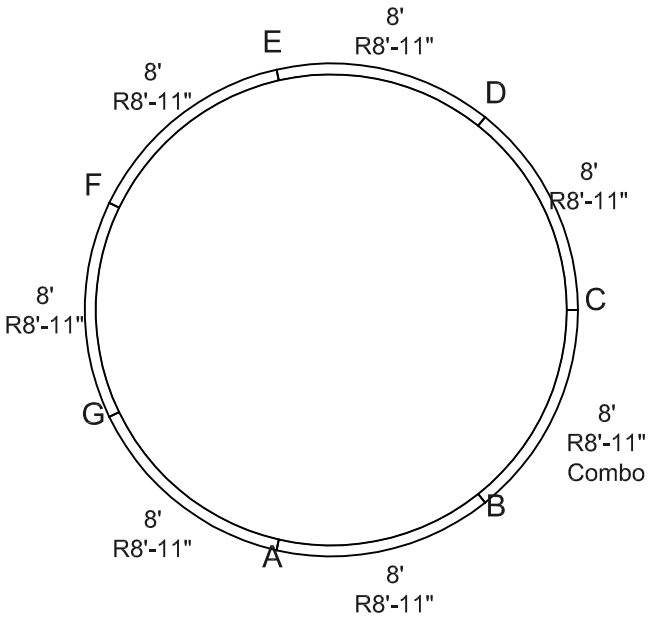

STEEL CHECK

KIT REF# MNT1710-RD-42

MEGNA POOLS
Megna Plastic Packaging Corp.

SIZE:	SHAPE:	HAND:	DWG#
20'-1" x 20'-1"	ROUND/OG	N/A	20FT A

PER.:	63'	S.A.:	315.84 ft²	VOL.:	0.00 gal.us
PER.:	19.20 m	S.A.:	29.34 m²	VOL.:	0.00 liters

DATE: 23/11/2010 | APPROVED:

DRAWN BY: NM

ALL DIMENSIONS ARE FINISHED

MANUFACTURING NOTICE

1- DUE TO UNCERTAIN GROUND VARIANCES POOL WALLS MUST BE INSTALLED A MINIMUM OF 6 INCHES BELOW GRADE
2- BUTTRESS SUPPORTS MUST BE FULLY SUPPORTED INCLUDING SONO TUBES BELOW FROST LEVEL. (4 FEET)
3- 12 INCH CONCRETE COLLAR MINIMUM 24 INCHES PAST STRAIGHT SIDES.
4- FILL REMOVED, TO BE SLOPED AROUND OUTSIDE PERIMETER.

NONCOMPLIANCE VOIDS WARRANTY

5- ALL TOP RAIL POOLS AVAILABLE IN 42" WITH 5" TOP RAIL AND 48" WITH 3" TOP RAIL.

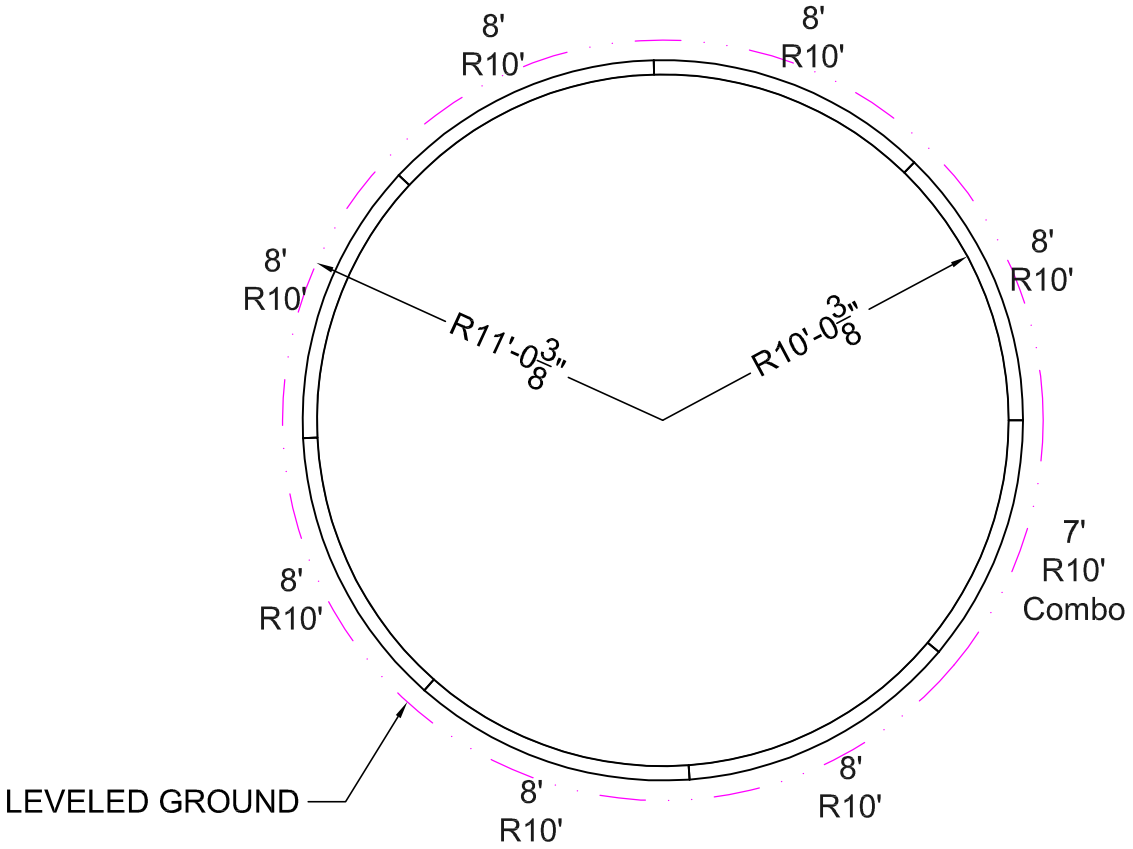

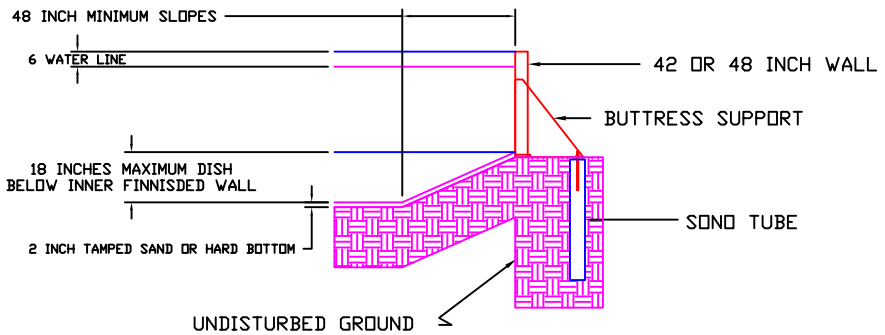

DESCRIPTION	QTY
7'x10' RAD COMBO	1
8'x10' RAD	7
STD HARDWARE PACK	1

ONGROUND TOP RAIL POOLS

KIT REF# MNT2000-RD-42

MEGNA POOLS

Megna Plastic Packaging Corp.

SIZE:	SHAPE:	HAND:	DWG#
20'-1" x 20'-1"	ROUND/OG	N/A	20FT B

PER.:	63'	S.A.:	315.84 ft²	VOL.:	0.00 gal.us
PER.:	19.20 m	S.A.:	29.34 m²	VOL.:	0.00 liters

DATE: 23/11/2010

DRAWN BY: NM

APPROVED:

STAKE OUT

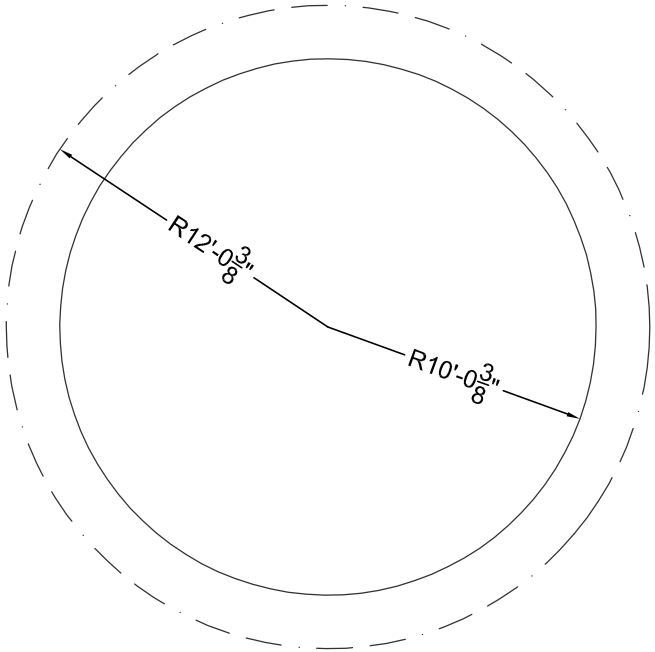

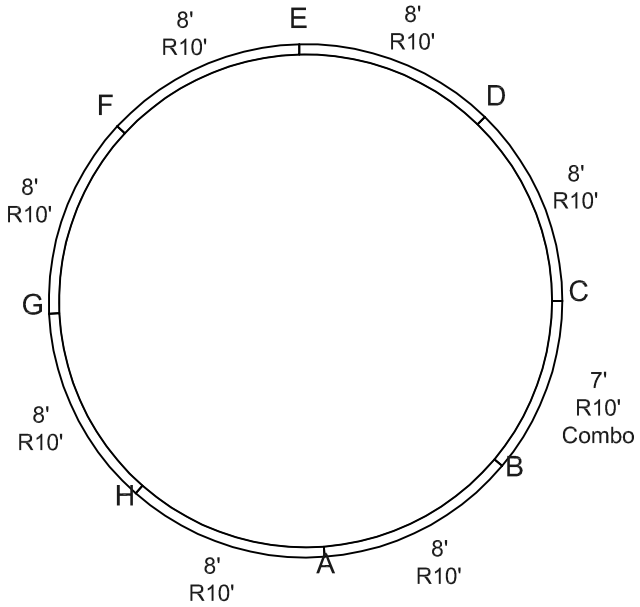

STEEL CHECK

KIT REF# MNT2000-RD-42

MEGNA POOLS
Megna Plastic Packaging Corp.

SIZE:	SHAPE:	HAND:	DWG#
20'-4" x 20'-4"	ROUND/OG	N/A	21FT A

PER.:	64'	S.A.:	325.95 ft²	VOL.:	0.00 gal.us
PER.:	19.51 m	S.A.:	30.28 m²	VOL.:	0.00 liters

DATE: 17/01/2011 | APPROVED:
DRAWN BY: NM

ALL DIMENSIONS ARE FINISHED

MANUFACTURING NOTICE

1- DUE TO UNCERTAIN GROUND VARIANCES POOL WALLS MUST BE INSTALLED A MINIMUM OF 6 INCHES BELOW GRADE
2- BUTTRESS SUPPORTS MUST BE FULLY SUPPORTED INCLUDING SONO TUBES BELOW FROST LEVEL. (4 FEET)
3- 12 INCH CONCRETE COLLAR MINIMUM 24 INCHES PAST STRAIGHT SIDES.
4- FILL REMOVED, TO BE SLOPED AROUND OUTSIDE PERIMETER.

NONCOMPLIANCE VOIDS WARRANTY

5- ALL TOP RAIL POOLS AVAILABLE IN 42" WITH 5" TOP RAIL AND 48" WITH 3" TOP RAIL.

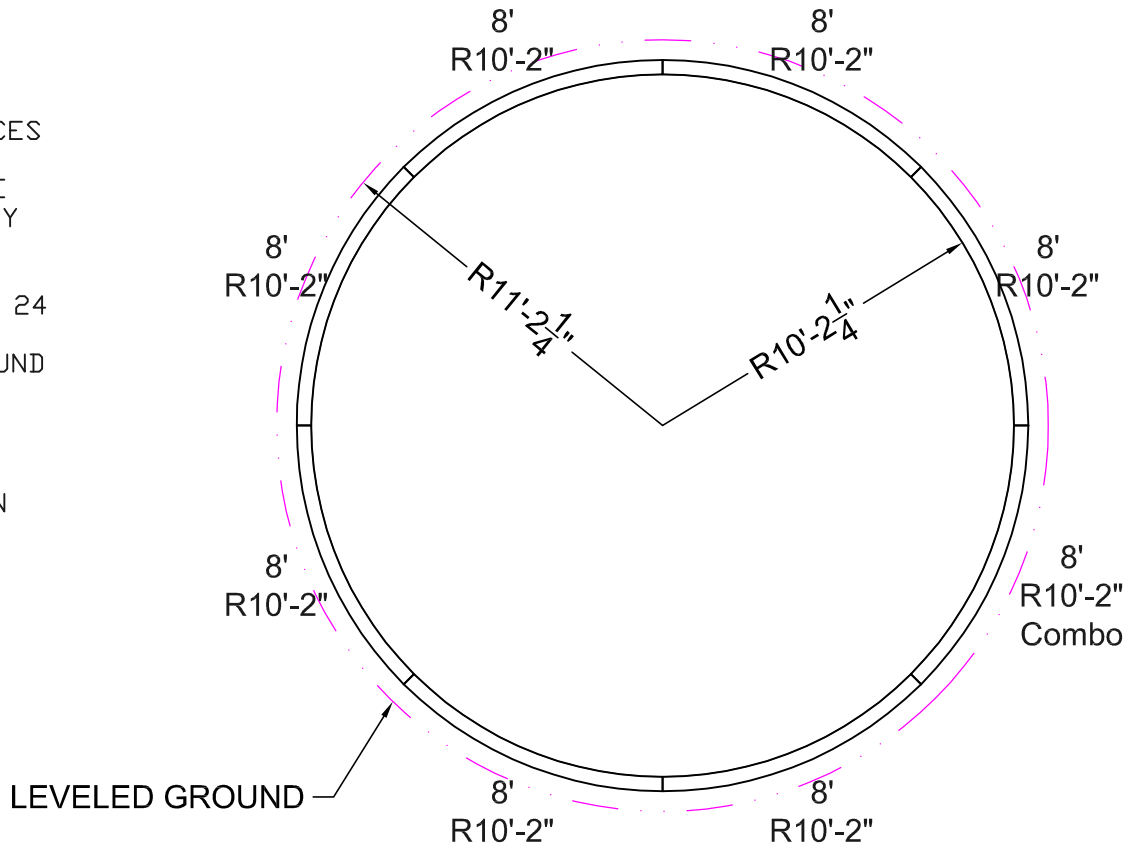

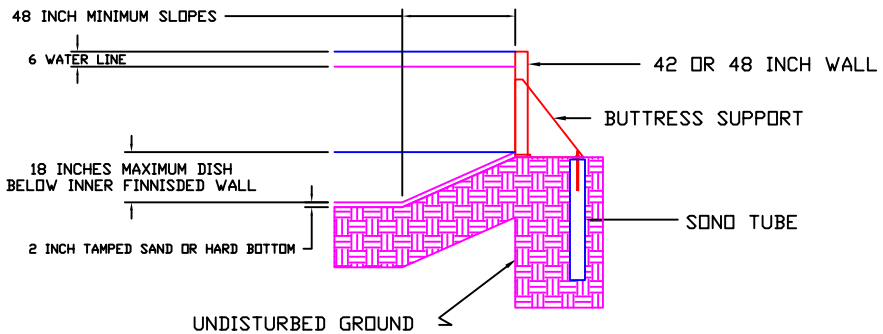

DESCRIPTION	QTY
8'x10'-2" RAD	7
8'x10'-2" RAD COMBO	1
STD HARDWARE PACK	1

ONGROUND TOP RAIL POOLS

KIT REF# MNT2004-RD-42

MEGNA POOLS

Megna Plastic Packaging Corp.

SIZE: 20'-4" x 20'-4"	SHAPE: ROUND/OG			HAND: N/A	DWG# 21FT B
PER.: 64'	S.A.: 325.95 ft²	VOL.: 0.00 gal.us		DATE: 17/01/2011	APPROVED:
PER.: 19.51 m	S.A.: 30.28 m²	VOL.: 0.00 liters		DRAWN BY: NM	

STAKE OUT

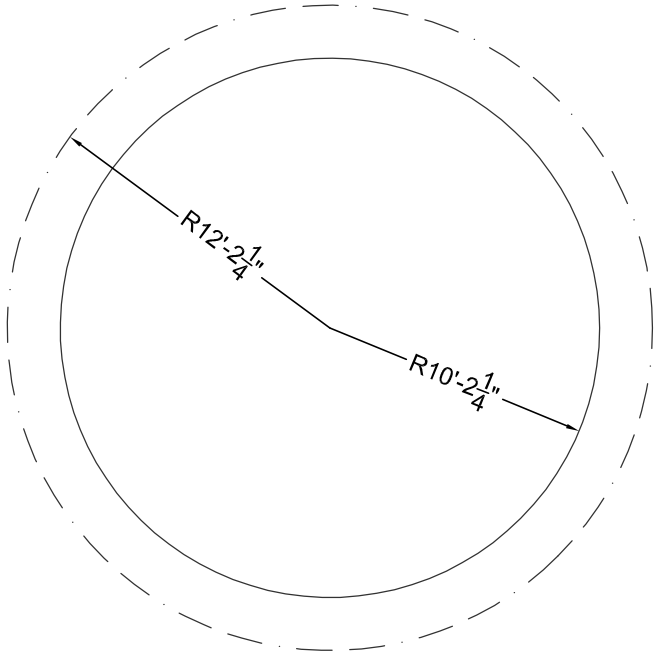

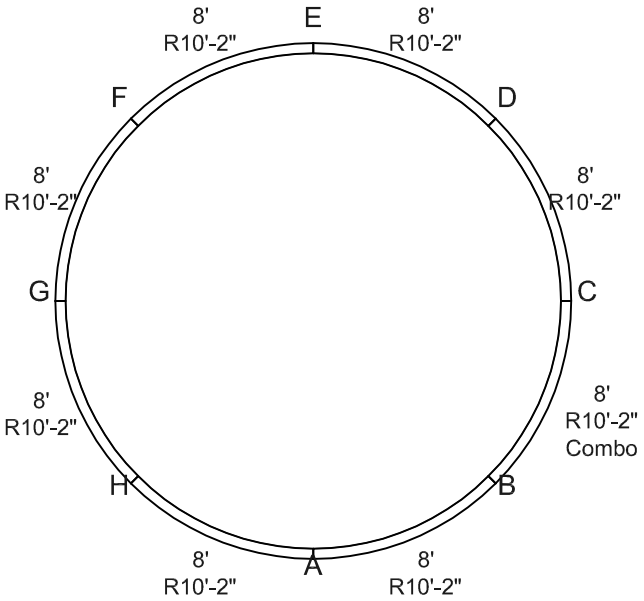

STEEL CHECK

KIT REF# MNT2004-RD-42

MEGNA POOLS
Megna Plastic Packaging Corp.

SIZE:	SHAPE:	HAND:	DWG#
22'-11" x 22'-11"	ROUND/OG	N/A	23FT A

PER.:	72'	S.A.:	412.53 ft²	VOL.:	0.00 gal.us
PER.:	21.95 m	S.A.:	38.33 m²	VOL.:	0.00 liters

DATE: 17/01/2011 | APPROVED:
DRAWN BY: NM

ALL DIMENSIONS ARE FINISHED

MANUFACTURING NOTICE

1- DUE TO UNCERTAIN GROUND VARIANCES POOL WALLS MUST BE INSTALLED A MINIMUM OF 6 INCHES BELOW GRADE
2- BUTTRESS SUPPORTS MUST BE FULLY SUPPORTED INCLUDING SONO TUBES BELOW FROST LEVEL. (4 FEET)
3- 12 INCH CONCRETE COLLAR MINIMUM 24 INCHES PAST STRAIGHT SIDES.
4- FILL REMOVED, TO BE SLOPED AROUND OUTSIDE PERIMETER.

NONCOMPLIANCE VOIDS WARRANTY

5- ALL TOP RAIL POOLS AVAILABLE IN 42" WITH 5" TOP RAIL AND 48" WITH 3" TOP RAIL.

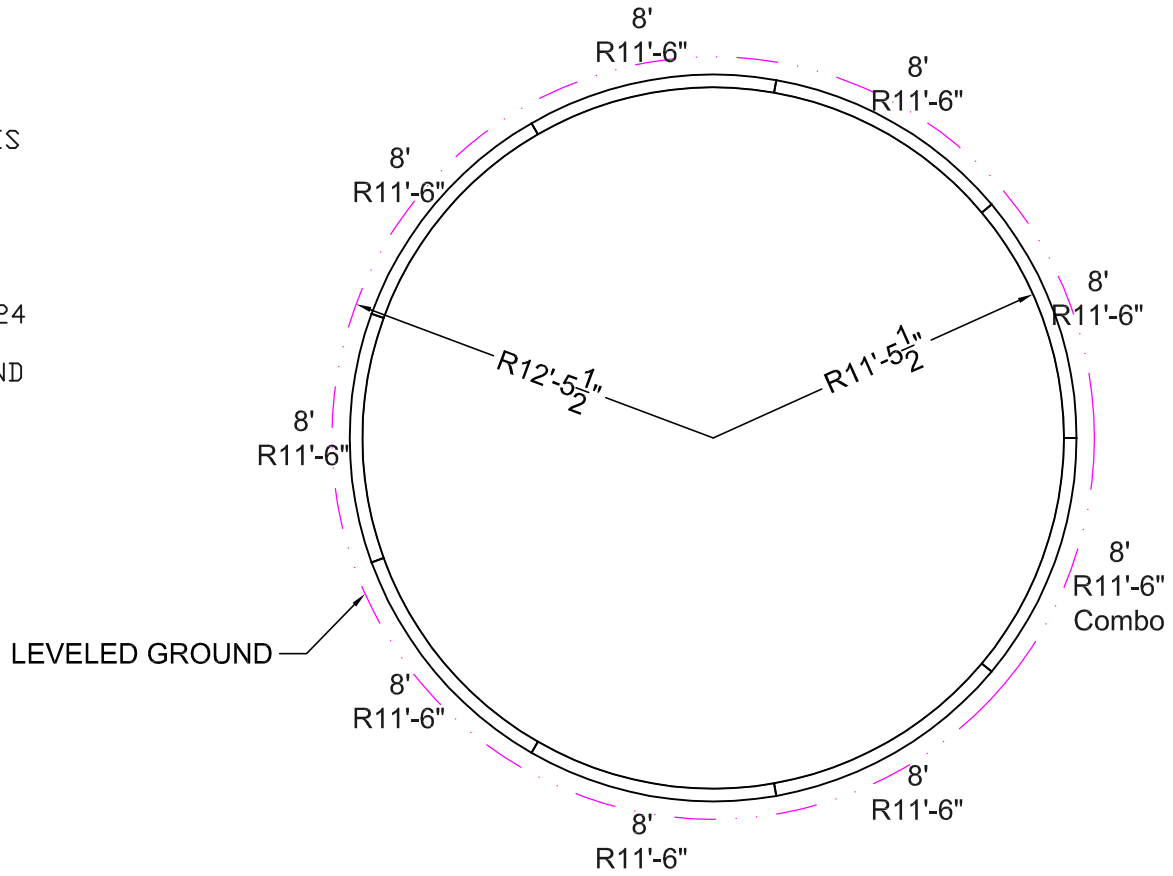

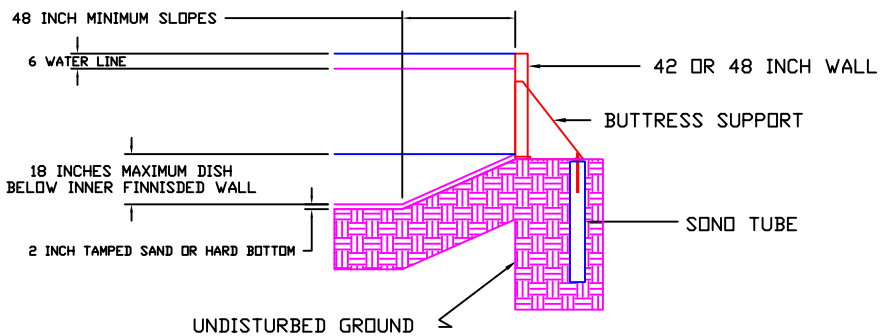

DESCRIPTION	QTY
8'x11'-6" RAD	8
8'x11'-6" RAD COMBO	1
STD HARDWARE PACK	1

ONGROUND TOP RAIL POOLS

KIT REF# MNT2211-RD-42

MEGNA POOLS

Megna Plastic Packaging Corp.

SIZE: 22'-11" x 22'-11"	SHAPE: ROUND/OG		HAND: N/A	DWG# 23FT B
PER.: 72'	S.A.: 412.53 ft²	VOL.: 0.00 gal.us	DATE: 17/01/2011	APPROVED:
PER.: 21.95 m	S.A.: 38.33 m²	VOL.: 0.00 liters	DRAWN BY: NM	

STAKE OUT

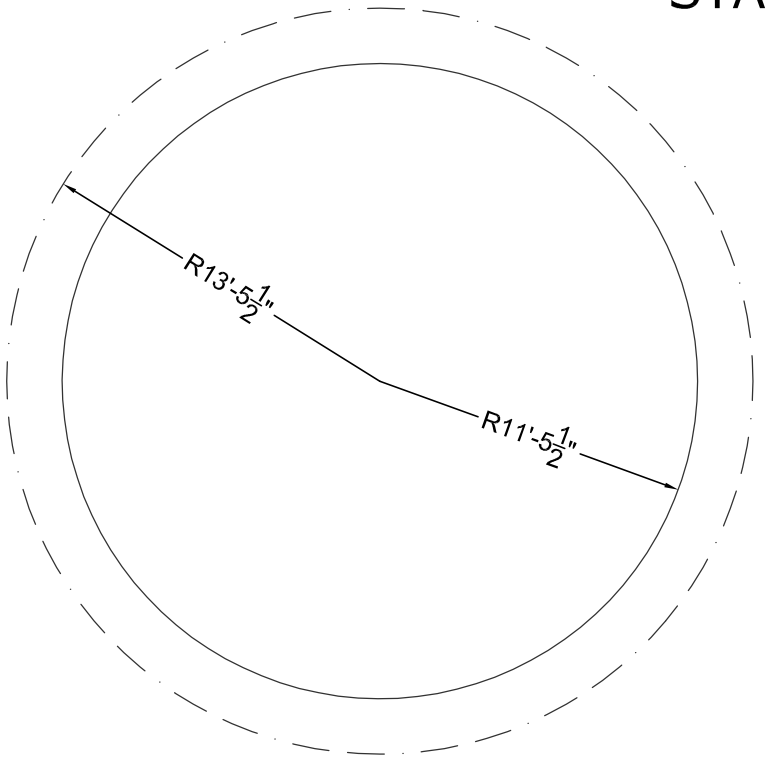

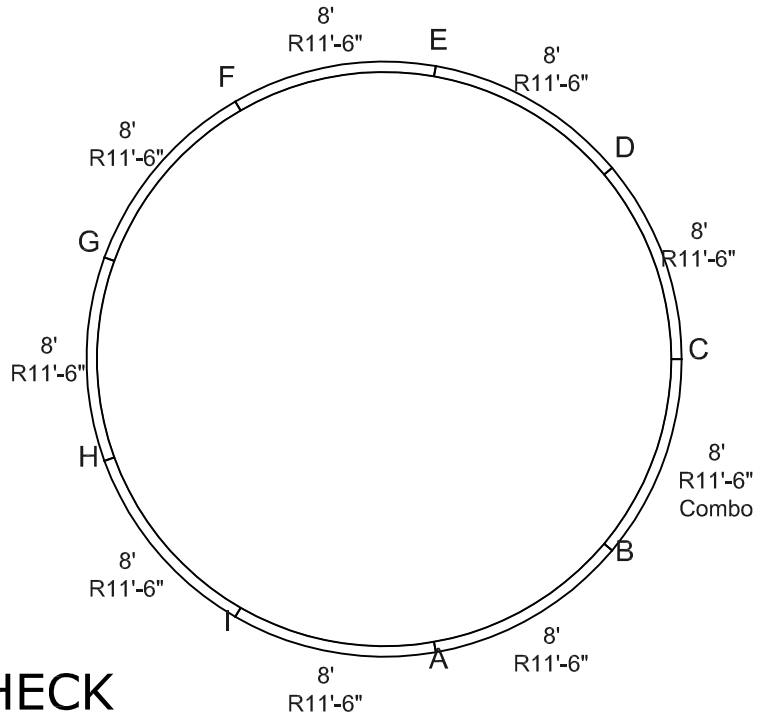

STEEL CHECK

KIT REF# MNT2211-RD-42

MEGNA POOLS
Megna Plastic Packaging Corp.

SIZE:	SHAPE:	HAND:	DWG#
24' x 24'	ROUND/OG	N/A	24FT A

PER.:	75'-5"	S.A.:	452.39 ft²	VOL.:	0.00 gal.us
PER.:	22.98 m	S.A.:	42.03 m²	VOL.:	0.00 liters

DATE: 23/11/2010 | APPROVED:

DRAWN BY: NM

ALL DIMENSIONS ARE FINISHED

MANUFACTURING NOTICE

1- DUE TO UNCERTAIN GROUND VARIANCES POOL WALLS MUST BE INSTALLED A MINIMUM OF 6 INCHES BELOW GRADE
2- BUTTRESS SUPPORTS MUST BE FULLY SUPPORTED INCLUDING SONO TUBES BELOW FROST LEVEL. (4 FEET)
3- 12 INCH CONCRETE COLLAR MINIMUM 24 INCHES PAST STRAIGHT SIDES.
4- FILL REMOVED, TO BE SLOPED AROUND OUTSIDE PERIMETER.

NONCOMPLIANCE VOIDS WARRANTY

5- ALL TOP RAIL POOLS AVAILABLE IN 42" WITH 5" TOP RAIL AND 48" WITH 3" TOP RAIL.

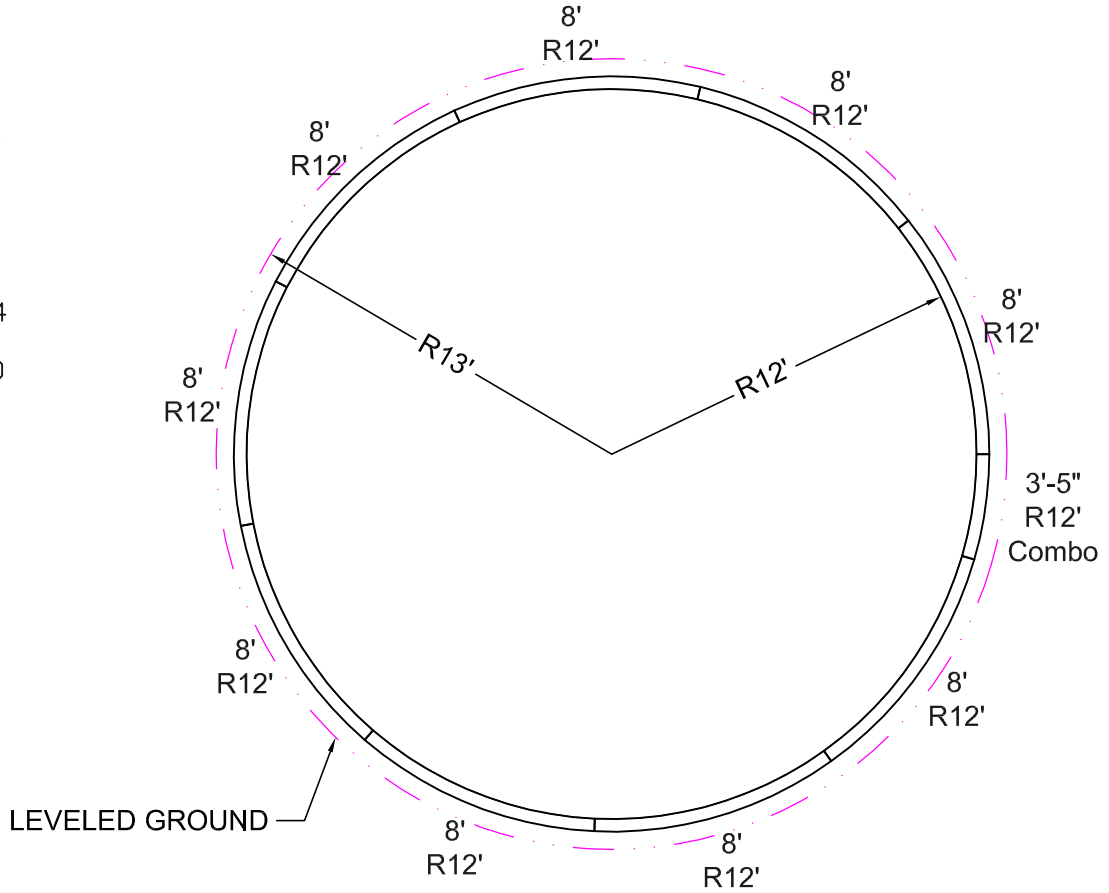

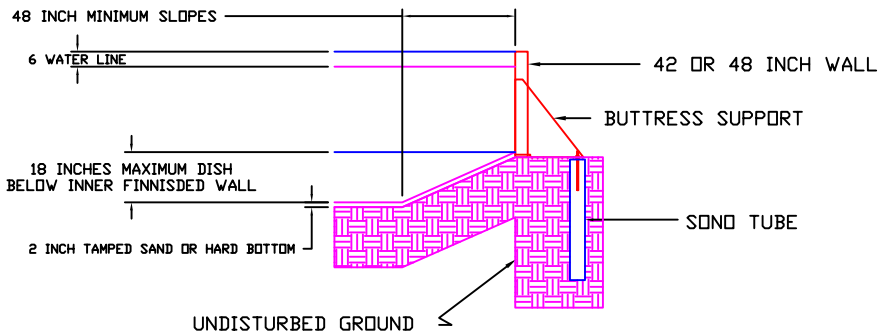

DESCRIPTION	QTY
3'-5"x12' RAD COMBO	1
8'x12' RAD	9
STD HARDWARE PACK	1

ONGROUND TOP RAIL POOLS

KIT REF# MNT2400-RD-42

MEGNA POOLS

Megna Plastic Packaging Corp.

SIZE:	SHAPE:	HAND:	DWG#
24' x 24'	ROUND/OG	N/A	24FT B

PER.:	75'-5"	S.A.:	452.39 ft²	VOL.:	0.00 gal.us
PER.:	22.98 m	S.A.:	42.03 m²	VOL.:	0.00 liters

DATE: 23/11/2010

DRAWN BY: NM

APPROVED:

STAKE OUT

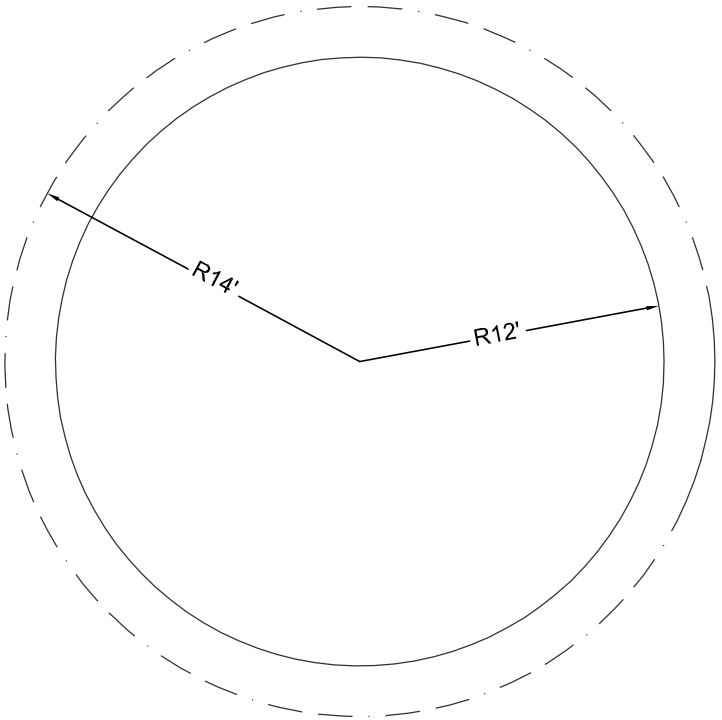

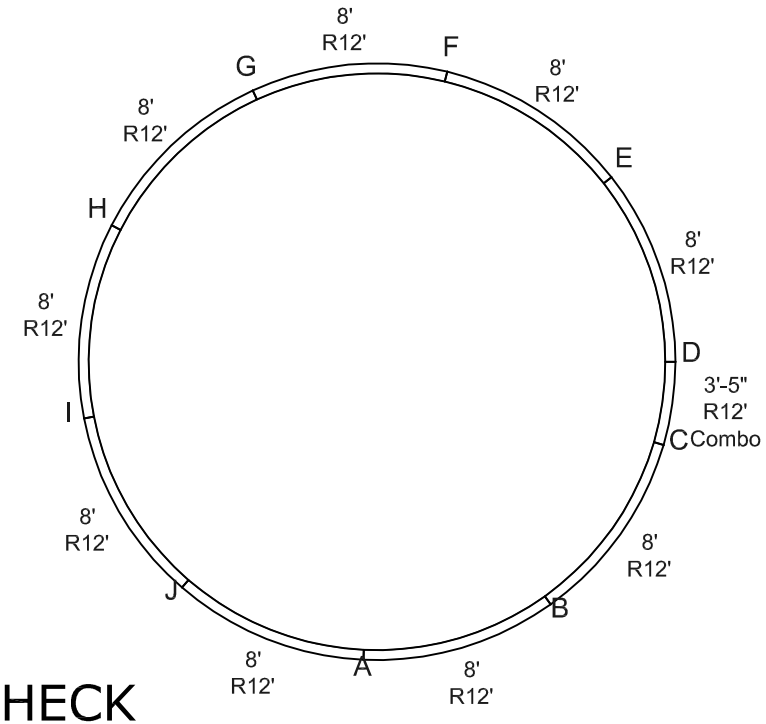

STEEL CHECK

KIT REF# MNT2400-RD-42

MEGNA POOLS
Megna Plastic Packaging Corp.

SIZE:	SHAPE:	HAND:	DWG#
25'-6" x 25'-6"	ROUND/OG	N/A	26FT A

PER.:	80'	S.A.:	509.30 ft²	VOL.:	0.00 gal.us
PER.:	24.38 m	S.A.:	47.32 m²	VOL.:	0.00 liters

DATE: 17/01/2011 | APPROVED:

DRAWN BY: NM

ALL DIMENSIONS ARE FINISHED

MANUFACTURING NOTICE

1- DUE TO UNCERTAIN GROUND VARIANCES POOL WALLS MUST BE INSTALLED A MINIMUM OF 6 INCHES BELOW GRADE
2- BUTTRESS SUPPORTS MUST BE FULLY SUPPORTED INCLUDING SONO TUBES BELOW FROST LEVEL. (4 FEET)
3- 12 INCH CONCRETE COLLAR MINIMUM 24 INCHES PAST STRAIGHT SIDES.
4- FILL REMOVED, TO BE SLOPED AROUND OUTSIDE PERIMETER.

NONCOMPLIANCE VOIDS WARRANTY

5- ALL TOP RAIL POOLS AVAILABLE IN
42" WITH 5" TOP RAIL AND
48" WITH 3" TOP RAIL.

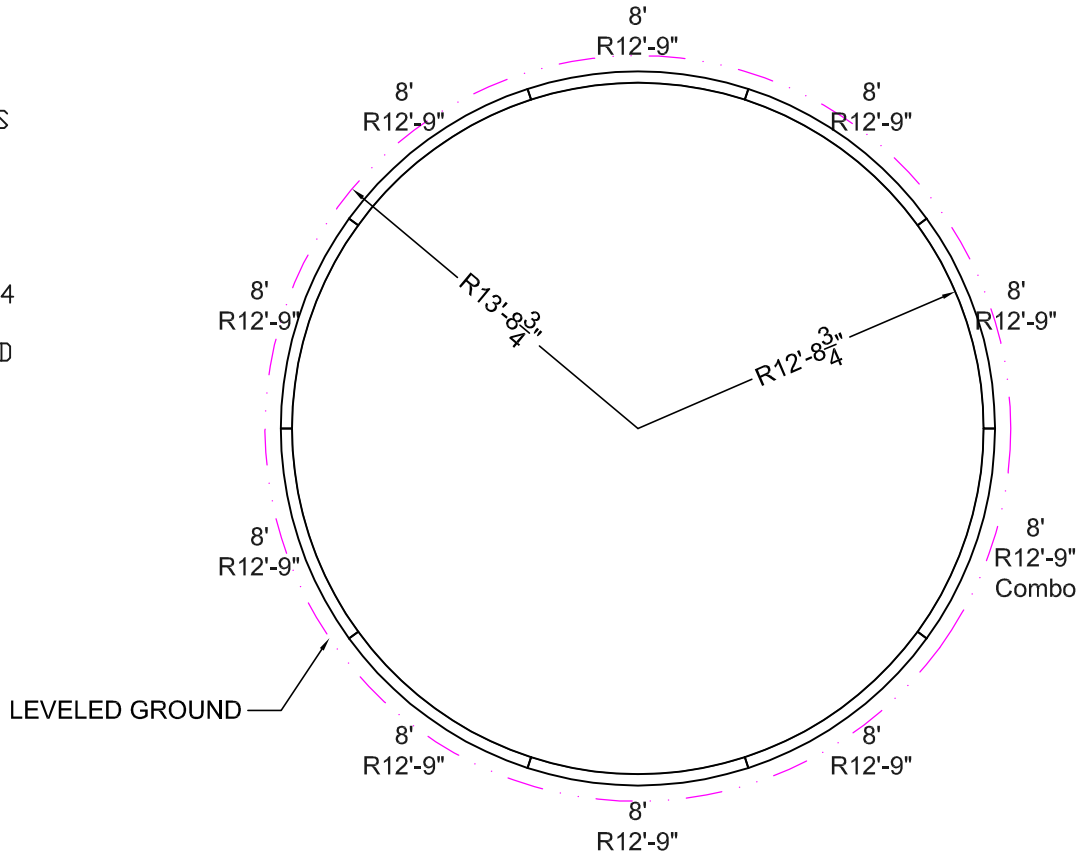

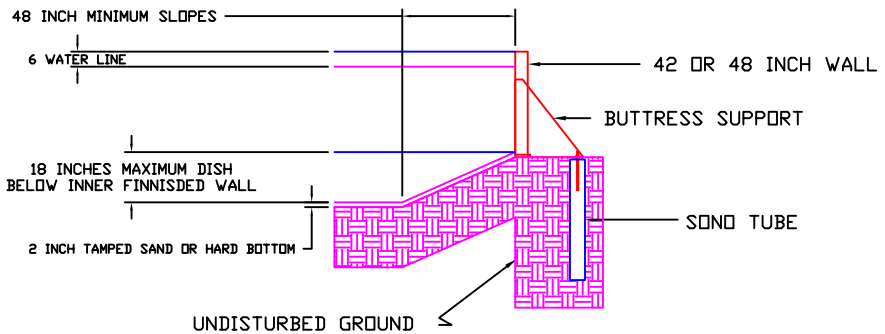

DESCRIPTION	QTY
8'x12'-9" RAD	9
8'x12'-9" RAD COMBO	1
STD HARDWARE PACK	1

ONGROUND TOP RAIL POOLS

KIT REF# MNT2506-RD-42

MEGNA POOLS

Megna Plastic Packaging Corp.

SIZE:	SHAPE:	HAND:	DWG#
25'-6" x 25'-6"	ROUND/OG	N/A	26FT B

PER.:	80'	S.A.:	509.30 ft²	VOL.:	0.00 gal.us
PER.:	24.38 m	S.A.:	47.32 m²	VOL.:	0.00 liters

DATE: 17/01/2011

DRAWN BY: NM

APPROVED:

STAKE OUT

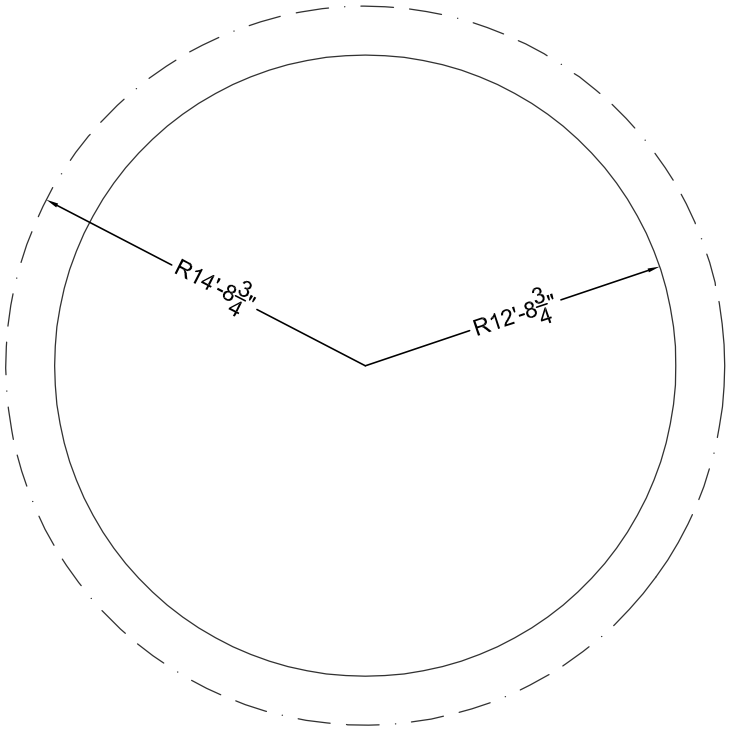

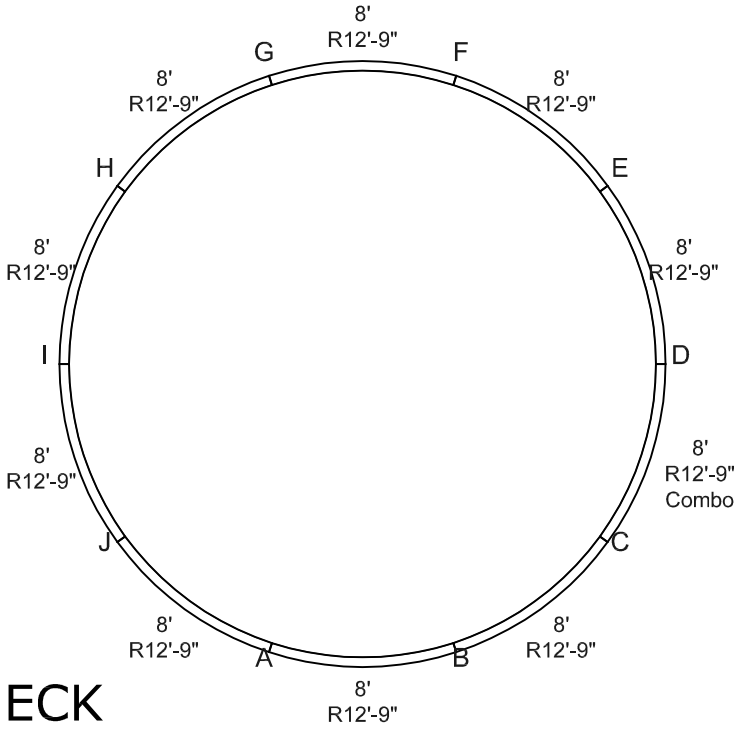

STEEL CHECK

KIT REF# MNT2506-RD-42

MEGNA POOLS
Megna Plastic Packaging Corp.

SIZE:	SHAPE:	HAND:	DWG#
28'-8" x 28'-8"	ROUND/OG	N/A	29FT A

PER.:	90'	S.A.:	644.58 ft²	VOL.:	0.00 gal.us
PER.:	27.43 m	S.A.:	59.88 m²	VOL.:	0.00 liters

DATE: 17/01/2011 | APPROVED:

DRAWN BY: NM

ALL DIMENSIONS ARE FINISHED

MANUFACTURING NOTICE

1- DUE TO UNCERTAIN GROUND VARIANCES POOL WALLS MUST BE INSTALLED A MINIMUM OF 6 INCHES BELOW GRADE
2- BUTTRESS SUPPORTS MUST BE FULLY SUPPORTED INCLUDING SONO TUBES BELOW FROST LEVEL. (4 FEET)
3- 12 INCH CONCRETE COLLAR MINIMUM 24 INCHES PAST STRAIGHT SIDES.
4- FILL REMOVED, TO BE SLOPED AROUND OUTSIDE PERIMETER.

NONCOMPLIANCE VOIDS WARRANTY

5- ALL TOP RAIL POOLS AVAILABLE IN
42" WITH 5" TOP RAIL AND
48" WITH 3" TOP RAIL.

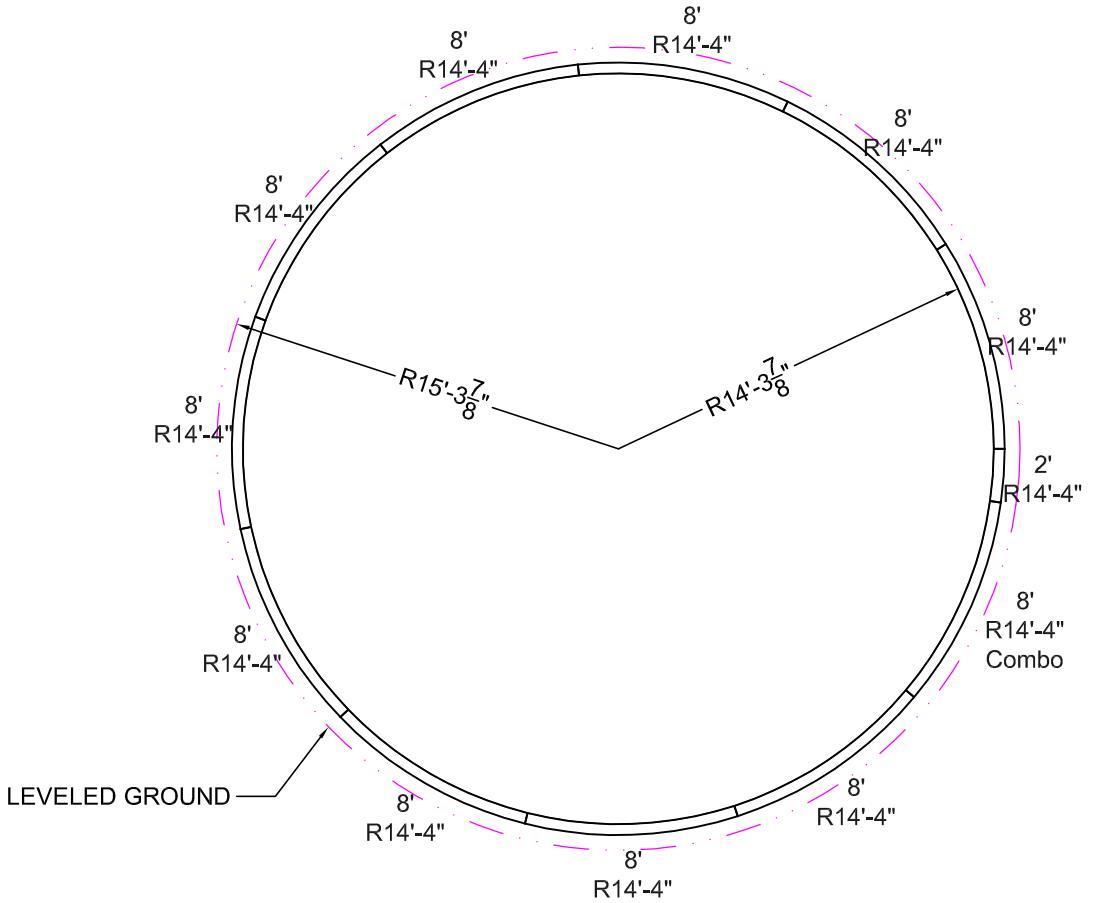

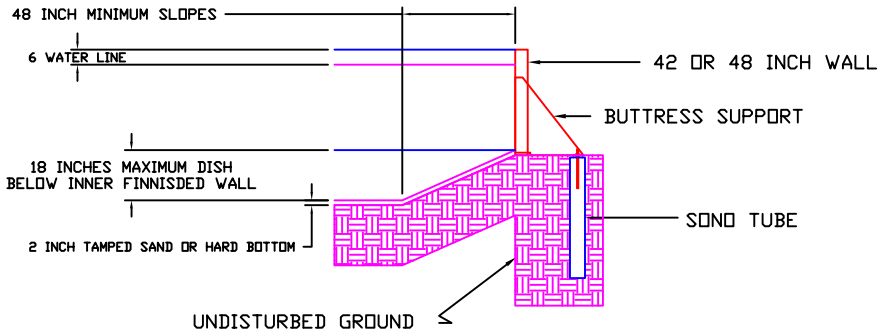

DESCRIPTION	QTY
2'x14'-4" RAD	1
8'x14'-4" RAD	10
8'x14'-4" RAD COMBO	1
STD HARDWARE PACK	1

ONGROUND TOP RAIL POOLS

KIT REF# MNT2808-RD-42

MEGNA POOLS

Megna Plastic Packaging Corp.

SIZE:	SHAPE:	HAND:	DWG#
28'-8" x 28'-8"	ROUND/OG	N/A	29FT B

PER.:	90'	S.A.:	644.58 ft²	VOL.:	0.00 gal.us	DATE: 17/01/2011
PER.:	27.43 m	S.A.:	59.88 m²	VOL.:	0.00 liters	DRAWN BY: NM

APPROVED:

STAKE OUT

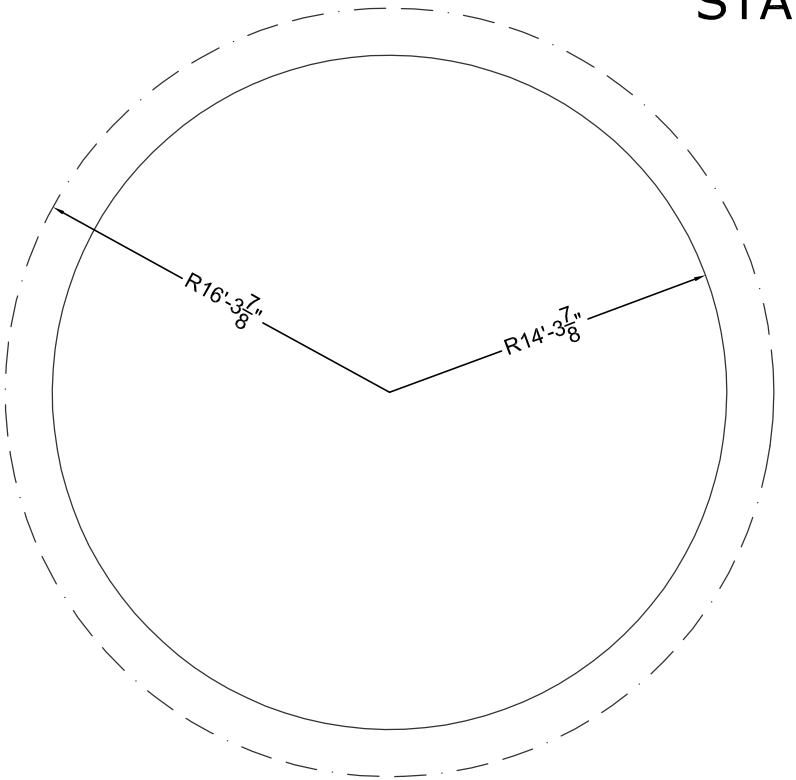

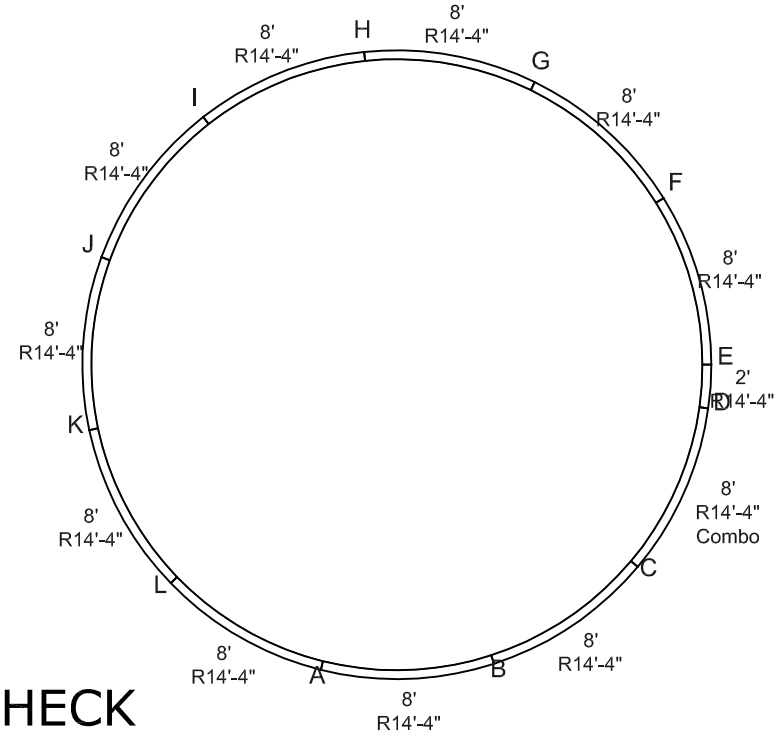

STEEL CHECK

KIT REF# MNT2808-RD-42

MEGNA POOLS
Megna Plastic Packaging Corp.

SIZE:	SHAPE:	HAND:	DWG#
32' x 32'	ROUND/OG	N/A	32FT A

PER.: 100'-6"	S.A.: 803.75 ft²	VOL.: 0.00 gal.us	DATE: 23/11/2010	APPROVED:
PER.: 30.63 m	S.A.: 74.67 m²	VOL.: 0.00 liters	DRAWN BY: NM	

ALL DIMENSIONS ARE FINISHED

MANUFACTURING NOTICE

1- DUE TO UNCERTAIN GROUND VARIANCES POOL WALLS MUST BE INSTALLED A MINIMUM OF 6 INCHES BELOW GRADE
2- BUTTRESS SUPPORTS MUST BE FULLY SUPPORTED INCLUDING SONO TUBES BELOW FROST LEVEL. (4 FEET)
3- 12 INCH CONCRETE COLLAR MINIMUM 24 INCHES PAST STRAIGHT SIDES.
4- FILL REMOVED, TO BE SLOPED AROUND OUTSIDE PERIMETER.

NONCOMPLIANCE VOIDS WARRANTY

5- ALL TOP RAIL POOLS AVAILABLE IN 42" WITH 5" TOP RAIL AND 48" WITH 3" TOP RAIL.

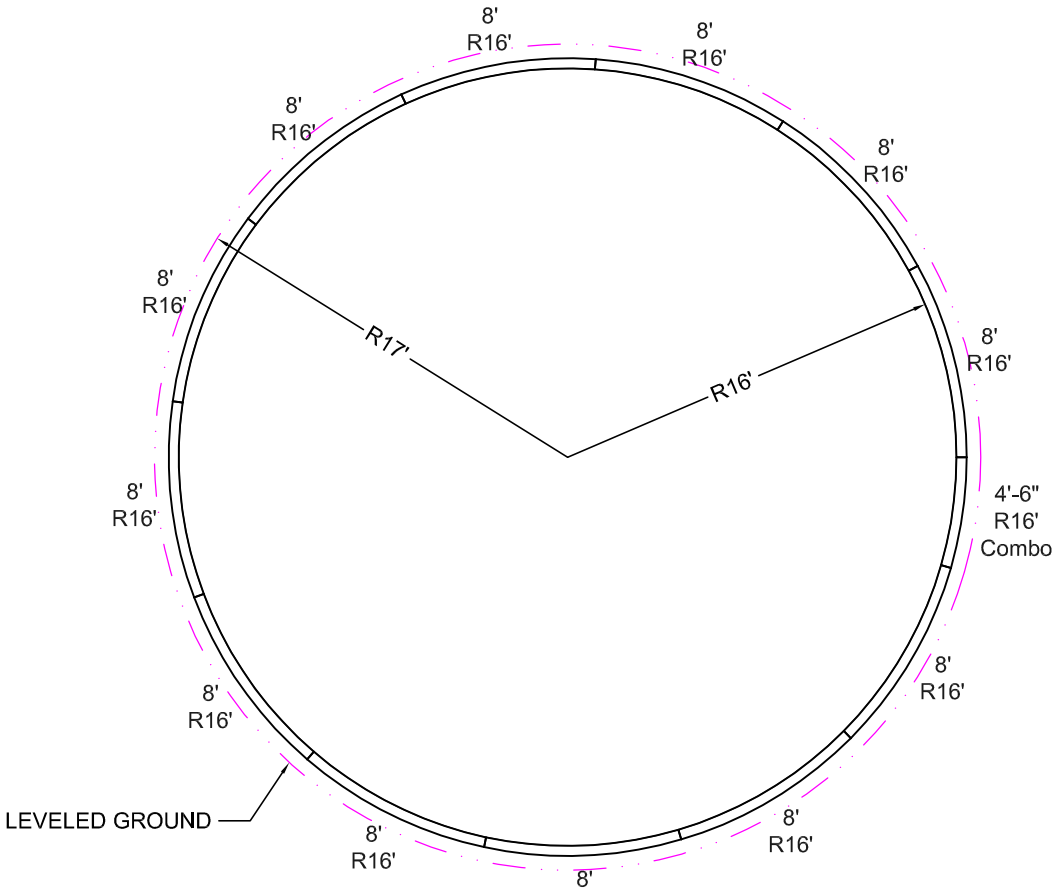

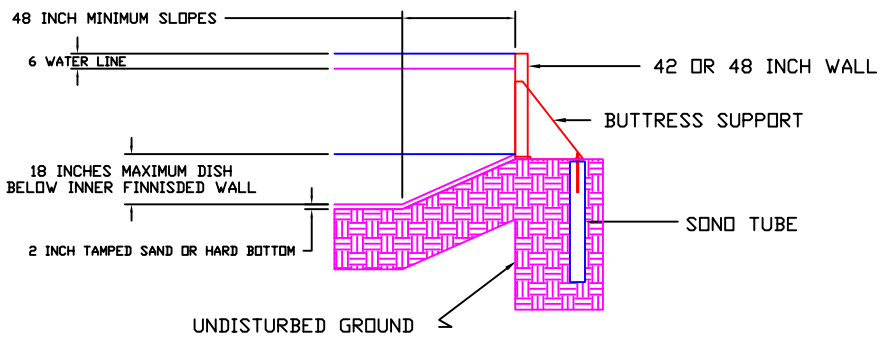

DESCRIPTION	QTY
4'-6"x16' RAD COMBO	1
8'x16' RAD	12
STD HARDWARE PACK	1

ONGROUND TOP RAIL POOLS

KIT REF# MNT3200-RD-42

MEGNA POOLS

Megna Plastic Packaging Corp.

SIZE:	SHAPE:	HAND:	DWG#
32' x 32'	ROUND/OG	N/A	32FT B

PER.:	100'-6"	S.A.:	803.75 ft²	VOL.:	0.00 gal.us
PER.:	30.63 m	S.A.:	74.67 m²	VOL.:	0.00 liters

DATE: 23/11/2010

DRAWN BY: NM

APPROVED:

STAKE OUT

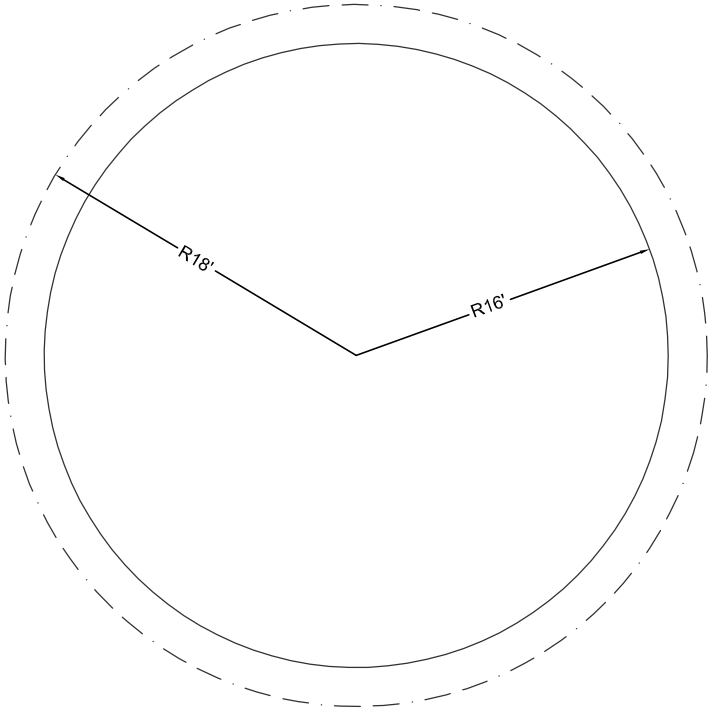

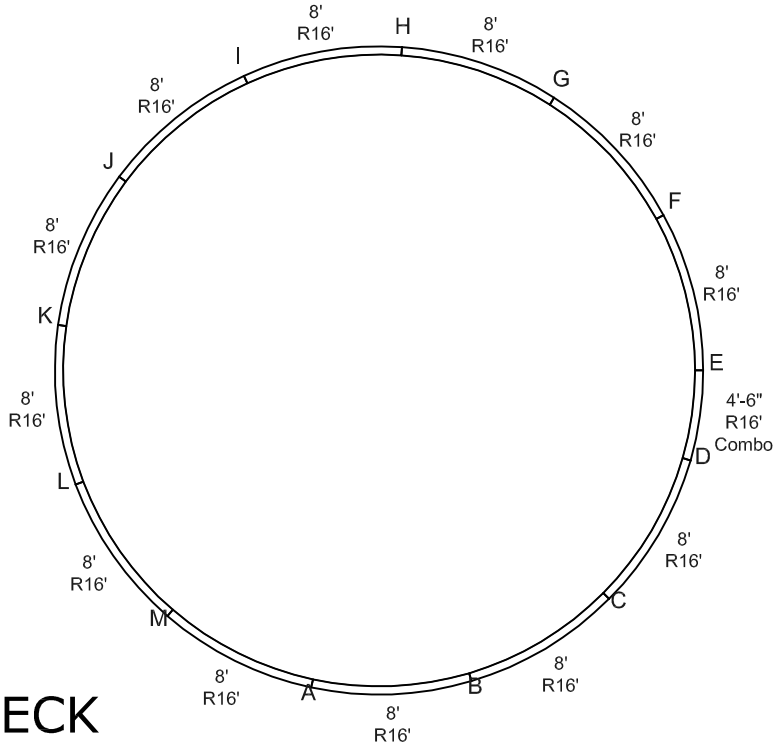

STEEL CHECK

KIT REF# MNT3200-RD-42

MEGNA POOLS
Megna Plastic Packaging Corp.

SIZE:	SHAPE:	HAND:	DWG#
35' x 35'	ROUND/OG	N/A	35FT A

PER.:	110'	S.A.:	962.89 ft²	VOL.:	0.00 gal.us
PER.:	33.53 m	S.A.:	89.46 m²	VOL.:	0.00 liters

DATE: 23/11/2010 | APPROVED:

DRAWN BY: NM

ALL DIMENSIONS ARE FINISHED

MANUFACTURING NOTICE

1- DUE TO UNCERTAIN GROUND VARIANCES POOL WALLS MUST BE INSTALLED A MINIMUM OF 6 INCHES BELOW GRADE
2- BUTTRESS SUPPORTS MUST BE FULLY SUPPORTED INCLUDING SONO TUBES BELOW FROST LEVEL. (4 FEET)
3- 12 INCH CONCRETE COLLAR MINIMUM 24 INCHES PAST STRAIGHT SIDES.
4- FILL REMOVED, TO BE SLOPED AROUND OUTSIDE PERIMETER.

NONCOMPLIANCE VOIDS WARRANTY

5- ALL TOP RAIL POOLS AVAILABLE IN 42" WITH 5" TOP RAIL AND 48" WITH 3" TOP RAIL.

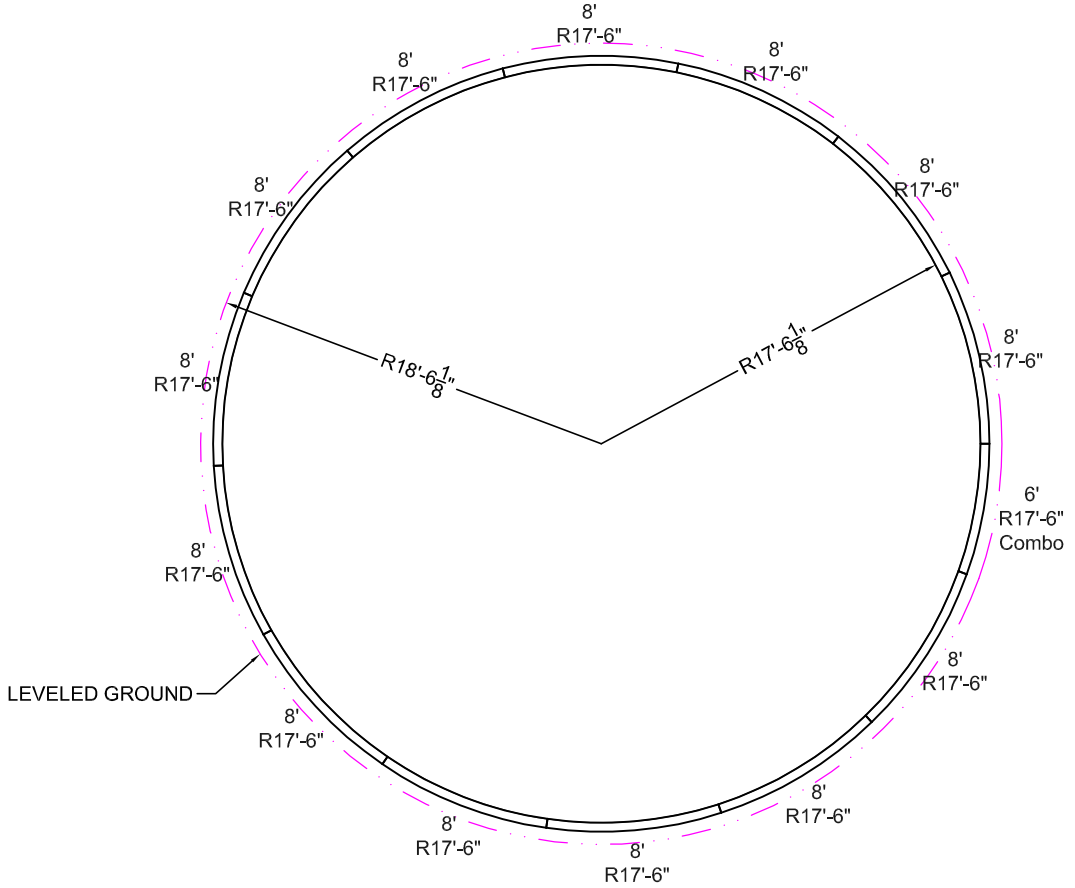

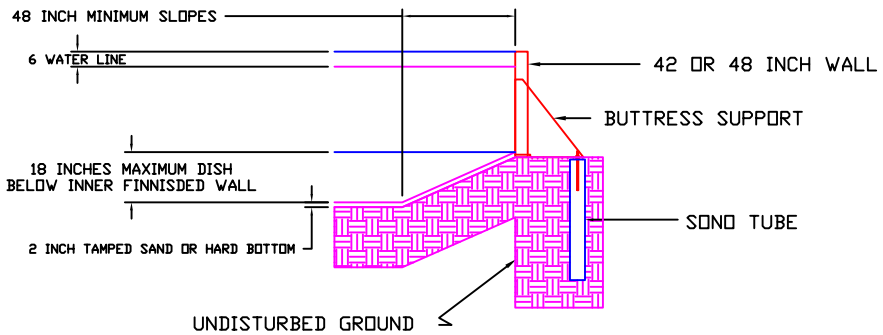

DESCRIPTION	QTY
6'x17'-6" RAD COMBO	1
8'x17'-6" RAD	13
STD HARDWARE PACK	1

ONGROUND TOP RAIL POOLS

KIT REF# MNT3500-RD-42

MEGNA POOLS

Megna Plastic Packaging Corp.

SIZE:	SHAPE:	HAND:	DWG#
35' x 35'	ROUND/OG	N/A	35FT B

PER.:	110'	S.A.:	962.89 ft²	VOL.:	0.00 gal.us
PER.:	33.53 m	S.A.:	89.46 m²	VOL.:	0.00 liters

DATE: 23/11/2010

DRAWN BY: NM

APPROVED:

STAKE OUT

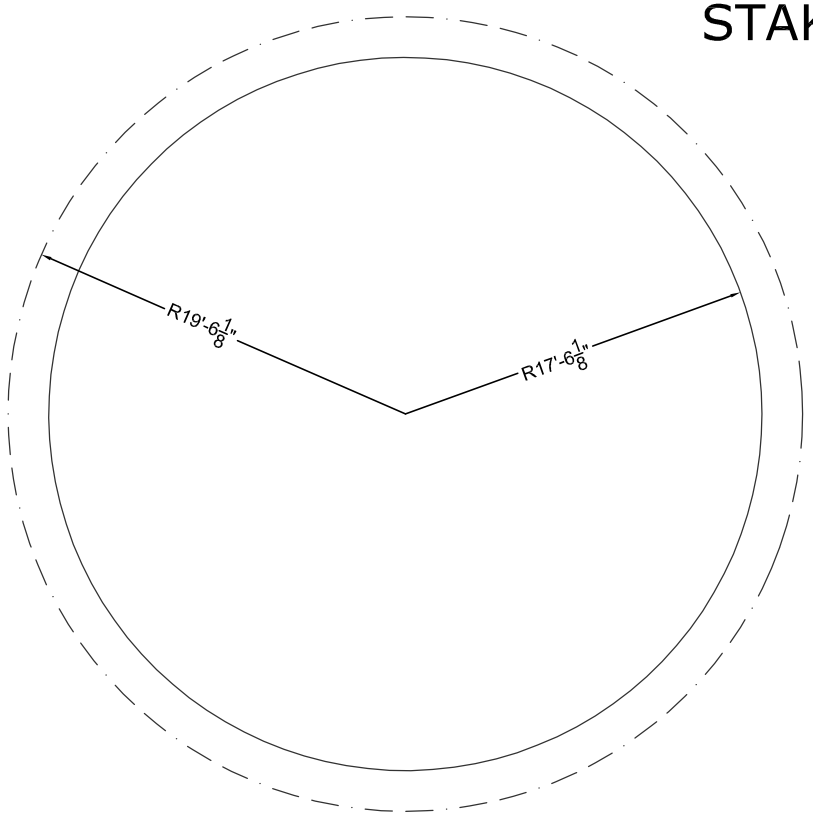

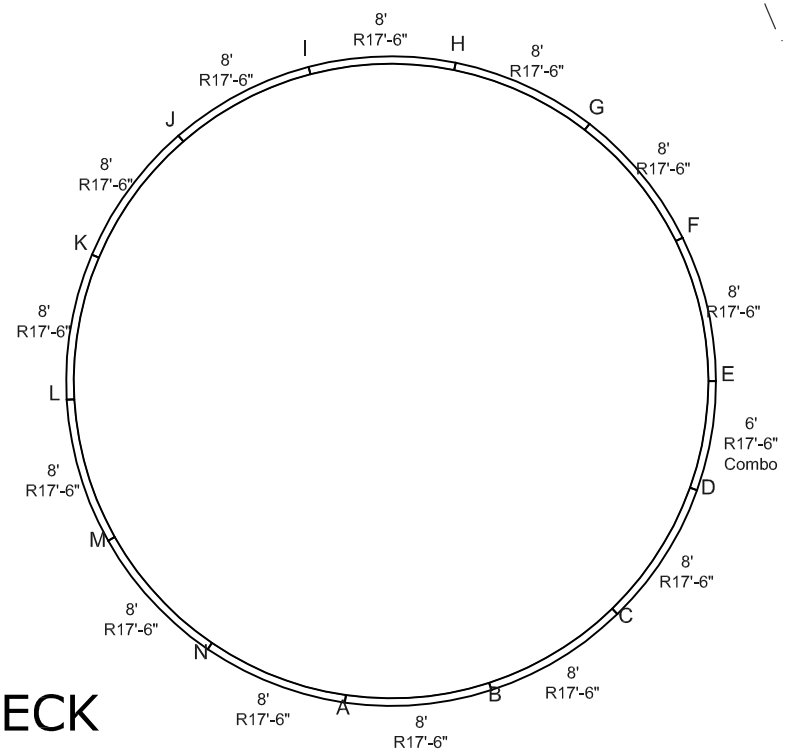

STEEL CHECK

KIT REF# MNT3500-RD-42