MODEL 112

WURLITZER ELECTRONIC PIANO SERVICE MANUAL

DIAGRAMS & SCHEMATICS

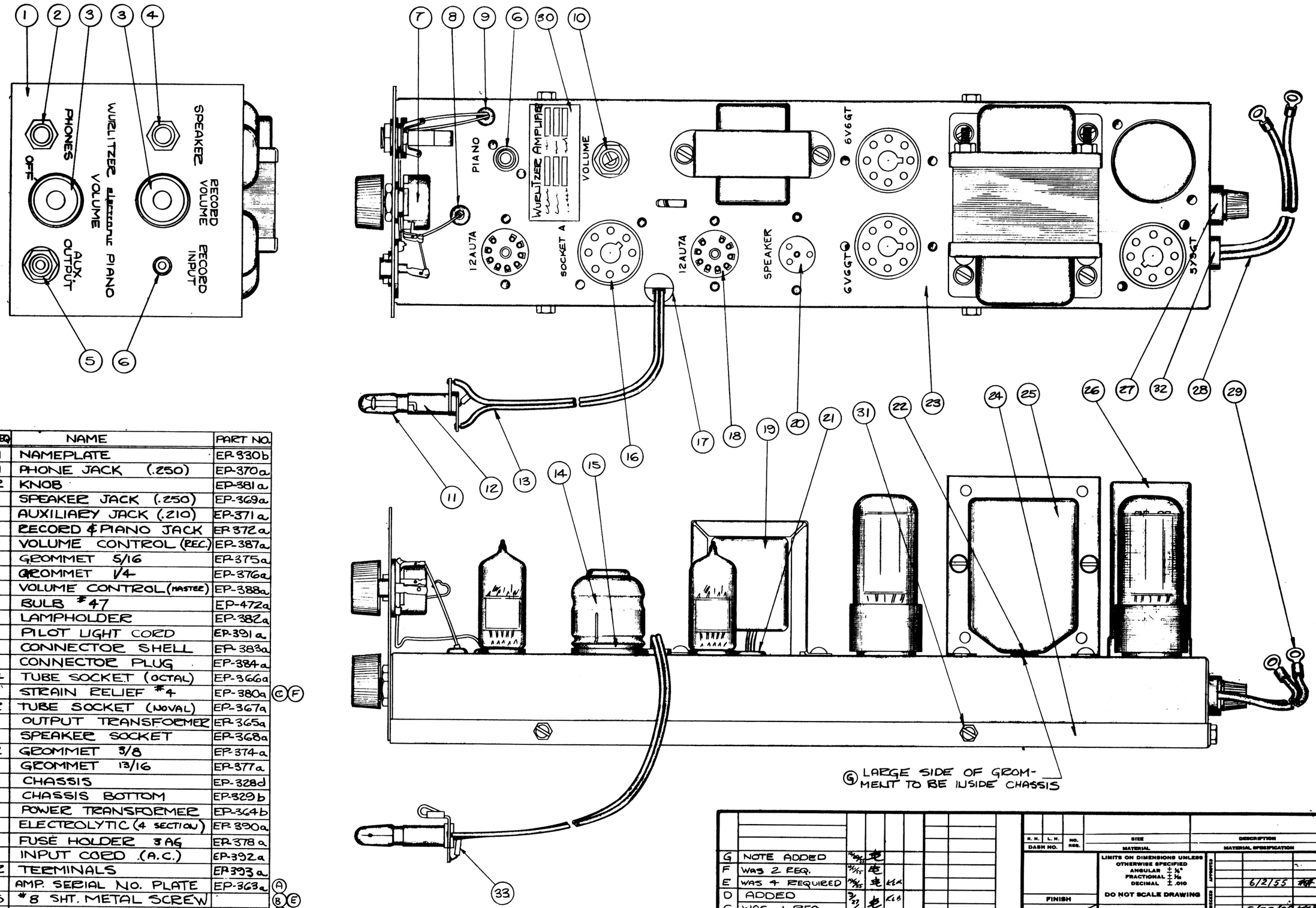

ITEM	REQ	NAME	PART NO.	
1	1	NAMEPLATE	EP-330b	
2	1	PHONE JACK (.250)	EP-370a	
3	2	KNOB	EP-381a	
4	1	SPEAKER JACK (.250)	EP-369a	
5	1	AUXILIARY JACK (.210)	EP-371a	
6	1	RECORD & PIANO JACK	EP-372a	
7	1	VOLUME CONTROL (REC.)	EP-387a	
8	1	GROMMET 5/16	EP-375a	
9	1	GROMMET 1/4	EP-376a	
10	1	VOLUME CONTROL (MASTER)	EP-388a	
11	1	BULB #47	EP-472a	
12	1	LAMPHOLDER	EP-382a	
13	1	PILOT LIGHT CORD	EP-391a	
14	1	CONNECTOR SHELL	EP-383a	
15	1	CONNECTOR PLUG	EP-384a	
16	4	TUBE SOCKET (OCTAL)	EP-366a	
17	1	STRAIN RELIEF #4	EP-380a	C F
18	2	TUBE SOCKET (NOVAL)	EP-367a	
19	1	OUTPUT TRANSFORMER	EP-365a	
20	1	SPEAKER SOCKET	EP-368a	
21	2	GROMMET 3/8	EP-374a	
22	1	GROMMET 13/16	EP-377a	
23	1	CHASSIS	EP-328d	
24	1	CHASSIS BOTTOM	EP-329b	
25	1	POWER TRANSFORMER	EP-364b	
26	1	ELECTROLYTIC (4 SECTION)	EP-390a	
27	1	FUSE HOLDER 3AG	EP-378a	
28	1	INPUT CORD (A.C.)	EP-392a	
29	2	TERMINALS	EP-393a	
30	.1	AMP. SERIAL NO. PLATE	EP-363a	A
31	5	#8 SHT. METAL SCREW		B E
32	1	STRAIN RELIEF SR-5K	EP-461a	D
33	1	RESISTOR R28		

LET.	DESCRIPTION	DATE	BY	APP.	EFF. SER.
G	NOTE ADDED	10/29/55			
F	WAS 2 REQ.	5/13/55			
E	WAS 4 REQUIRED	9/6/55		KLA	
D	ADDED	3/27/55		KLB	
C	WAS 1 REQ.				
B	ADDED	8/1/53		KGB	
A	ADDED				

ACT. WT. / CAL. WT.

NO. REQ.	NEXT ASSEM.	MODEL
1		112A
1		112

R. H. / L. H. / DASH NO. / NO. REQ. / SIZE / MATERIAL / DESCRIPTION / MATERIAL SPECIFICATION

LIMITS ON DIMENSIONS UNLESS OTHERWISE SPECIFIED
ANGULAR ± ½°
FRACTIONAL ± 1/32
DECIMAL ± .010
DO NOT SCALE DRAWING

FINISH

HEAT TREAT

SCALE FULL

APPROVED 6/2/55

CHECKED

DRAFTSMAN 5/25/55 RCB 5/13/55

THE RUDOLPH WURLITZER CO.
DEKALB DIVISION — DEKALB, ILLINOIS

AMPLIFIER ASSEM.

EP-396c

Fig. 10

scanned by tropical fish tropicalfishvintage.com

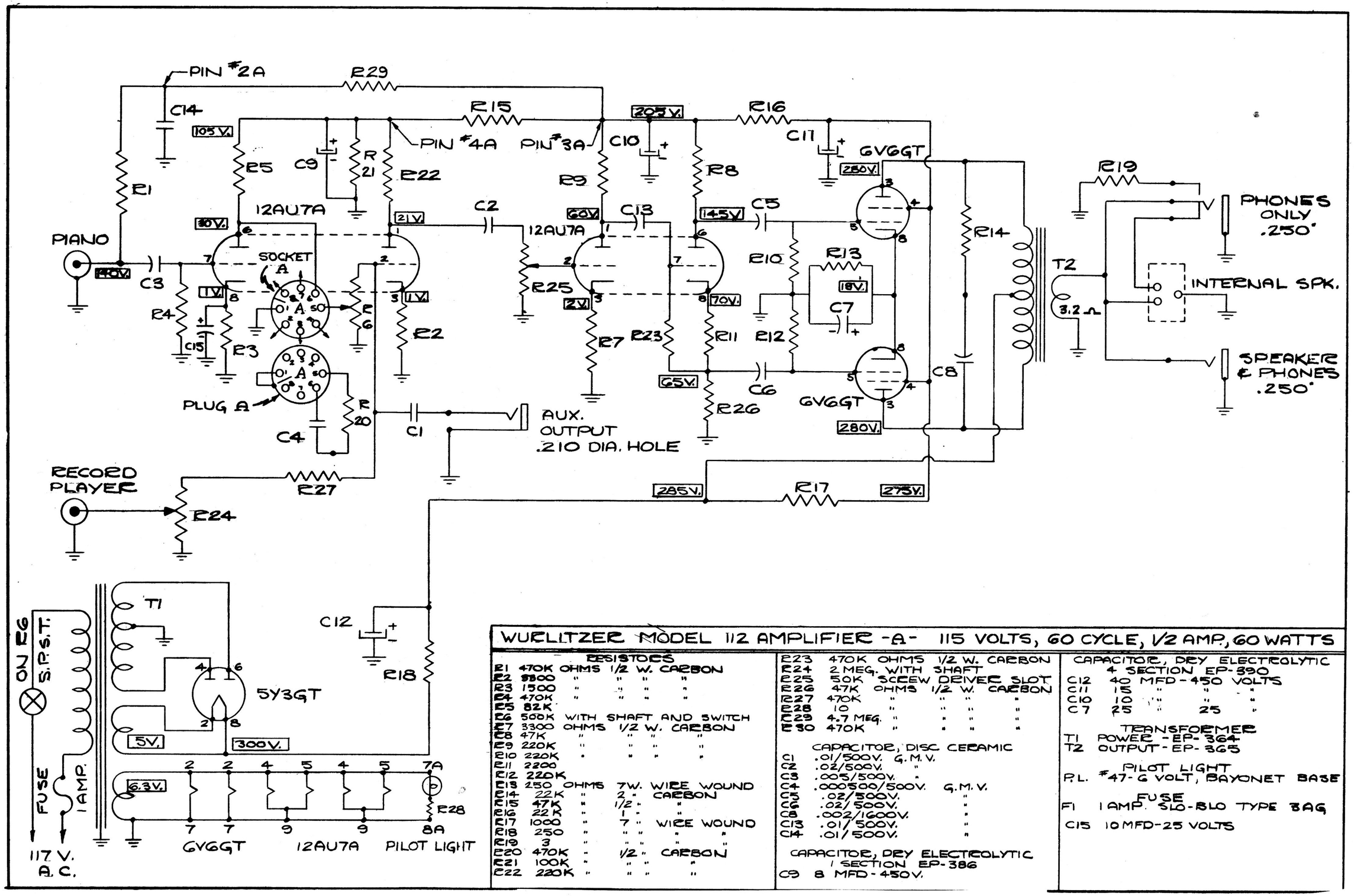

WURLITZER MODEL 112 AMPLIFIER -A- 115 VOLTS, 60 CYCLE, 1/2 AMP., 60 WATTS

RESISTORS

R1	470K OHMS	1/2 W. CARBON
R2	3300 "	" " "
R3	1500 "	" " "
R4	470K "	" " "
R5	82K	
R6	500K	WITH SHAFT AND SWITCH
R7	3300 OHMS	1/2 W. CARBON
R8	47K "	" " "
R9	220K "	" " "
R10	220K "	" " "
R11	2200	
R12	220K	
R13	250 OHMS	7W. WIRE WOUND
R14	22K "	2 " CARBON
R15	47K "	1/2 " "
R16	22K "	1 " "
R17	1000 "	7 " WIRE WOUND
R18	250 "	" " " "
R19	3 "	" " " "
R20	470K "	1/2 " CARBON
R21	100K "	" " "
R22	220K "	" " "
R23	470K OHMS	1/2 W. CARBON
R24	2 MEG. WITH SHAFT	
R25	50K	SCREW DRIVER SLOT
R26	47K OHMS	1/2 W. CARBON
R27	470K "	" " "
R28	10 "	" " "
R29	4.7 MEG. "	" " "
R30	470K "	" " "

CAPACITOR, DISC CERAMIC

C1	.01/500V.	G.M.V.
C2	.02/500V.	"
C3	.005/500V.	"
C4	.000500/500V.	G.M.V.
C5	.02/500V.	"
C6	.02/500V.	"
C8	.002/1600V.	"
C13	.01/500V.	"
C14	.01/500V.	"

CAPACITOR, DRY ELECTROLYTIC 1 SECTION EP-386

C9 8 MFD-450V.

CAPACITOR, DRY ELECTROLYTIC 4 SECTION EP-390

C12	40 MFD-450 VOLTS	
C11	15 "	" "
C10	10 "	" "
C7	25 "	25 "

TRANSFORMER

T1 POWER -EP-364
T2 OUTPUT -EP-365

PILOT LIGHT

P.L. #47-6 VOLT, BAYONET BASE

FUSE

F1 1 AMP. SLO-BLO TYPE 3AG

C15 10 MFD-25 VOLTS

Fig. 9

scanned by tropical fish tropicalfishvintage.com

NOMENCLATURE

1. Front Rail Pin
2. Key
3. Music Desk Assembly
4. Balance Rail Pin
5. Key Cloth
6. Capstan Screw
7. Fly Leather
8. Fly Stop Cloth
9. Butt Spoon
10. Butt
11. Pick-Up Insulator
12. Reed Bar
13. Hammer
14. Reed
15. Shield
16. Pick-Up Washer
17. Pick-Up Screw
18. Pick-Up Bushing
19. Pick-Up
20. Damper
21. Reed Screw
22. Reed Washer
23. Damper Lever
24. Damper Lever Lift Wire
25. Damper Lever Lift Dowel
26. Damper Lever Flange
27. Damper Rod
28. Damper Rod Brackets
29. Damper Screws
30. Damper Lever Flange Spring
31. Action Rail
32. Butt Screws
33. Butt Flange
34. Fly Regulating Leather
35. Butt Regulating Screw
36. Fly
37. Amplifier
38. Speaker
39. Threaded Damper Rod

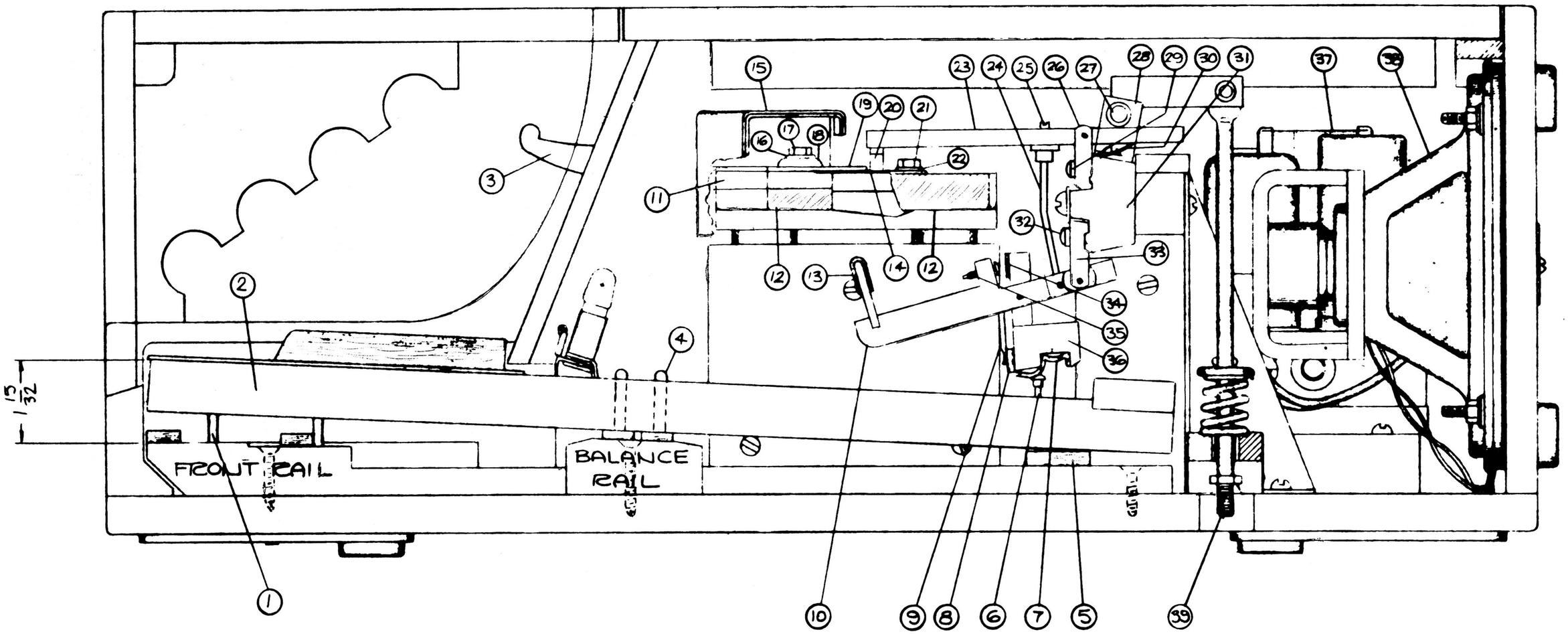

WURLITZER ELECTRONIC PIANO MODEL 112a
(U.S. AND FOREIGN PATENTS PENDING)

DIAGRAM A

scanned by tropical fish tropicalfishvintage.com