PORTOFINO INFUSION STATION

The Portofino Infusion Station follows both form and function with a clean, streamlined design that is sufficient for the intense nature of healthcare environments. It is constructed with the same sleek and contemporary style as other Portofino casework. This infusion station has a two-sided functionality, allowing patients to utilize both sides of the unit simultaneously. An opaque Plexiglass screen is included to provide privacy to patients accessing it at the same time. A wardrobe with ample storage and a coat hook is provided for storing the patient's personal belongings, and a convenient power pop up is included for patient use while receiving treatment. Easy access to the waste container, glove boxes, and full extension storage drawers are provided for the convenience of the health professional. The unit is constructed with a toe kick around the perimeter to accommodate cove base. A front shelf is provided for attachment of a sharps container.

866.446.3950 | info@lifeflo.io | lifeflo.io

LIFEFLO PORTOFINO INFUSION STATION

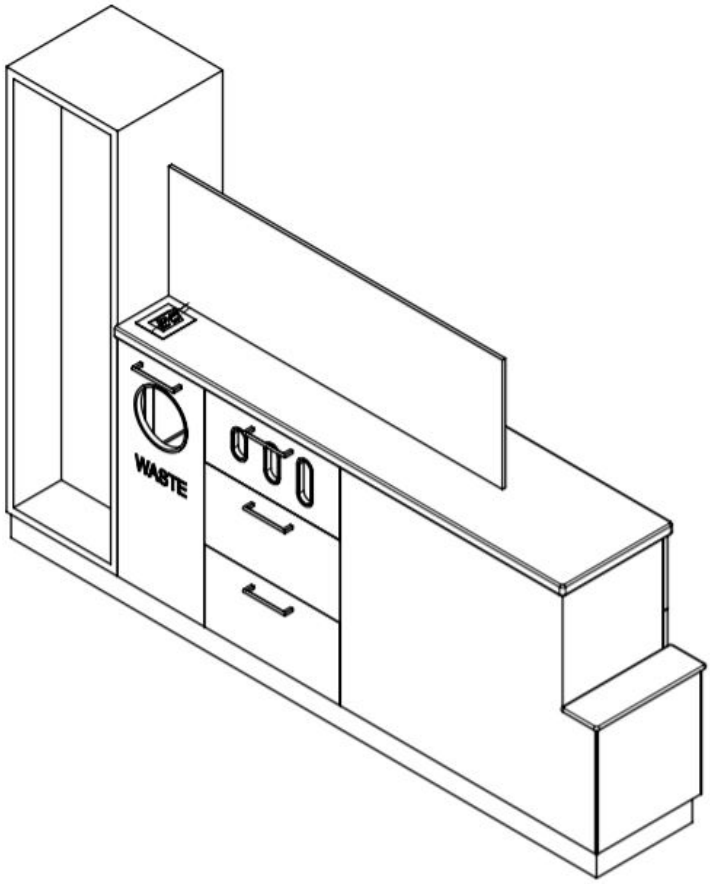

Features

- High pressure laminate surface
- 2mm edgeband
- Standard solid surface top
- Multiple size glove storage and access
- Full extension drawers
- Two-sided functionality
- Privacy screen
- Power pop ups
- Wardrobe for storing personal belongings

Options

- Optional EOS^{CU} solid surface top
- Optional tub inserts
- Can be specified in the Magellan style
- Choice of LifeFlo stock finish

Specifications

Stock Number

PH-6696ISCON

Overall Dimensions

96.5" W x 15.5" D x 66" H

EOS^{cu} Grey

EOS^{cu} Beige

EOS^{CU} SPECIFICATION LANGUAGE

In order to specify EOS^{CU} as your preferred surfaces for a given project, be sure to enter it as:

EPA Registered, Self-Sanitizing Surface with Embedded Proprietary Cuprous Oxide and Proven Preventive Biocidal Capabilities

EOS^{CU}™ Preventive|Biocidal Surfaces™

*Testing of EOS^{CU} (Antimicrobial Cupron Enhanced EOS Surfaces) demonstrates effective antibacterial activity against *Staphylococcus aureus*, *Enterobacter aerogenes*, Methicillin-resistant *Staphylococcus aureus*, *Escherichia coli* and *Pseudomonas aeruginosa.*

Finishes


Mahogany


Maple


Cherry


Java


Vintage Elm


Walnut


Black


Carbon Fiber

Gray

White

Solid Surface Finishes


Silver Falls


Cumberland

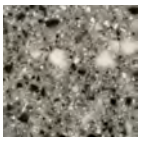
Platinum Grey


Coal

866.446.3950 | info@lifeflo.io | lifeflo.io