CXT OZARK
Double Flush
Precast concrete
ADA restroom

Front Elevation

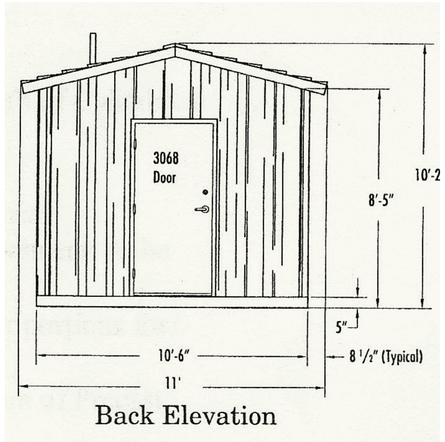

Back Elevation

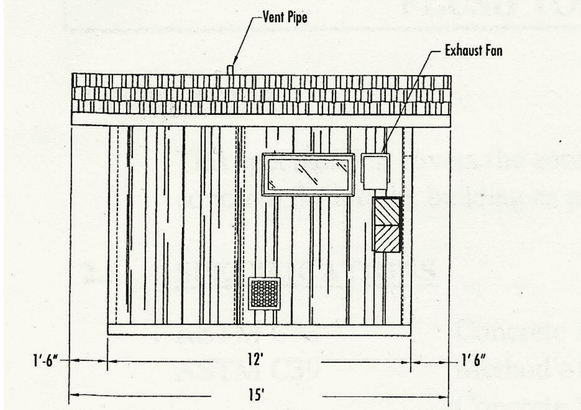

Left End Elevation

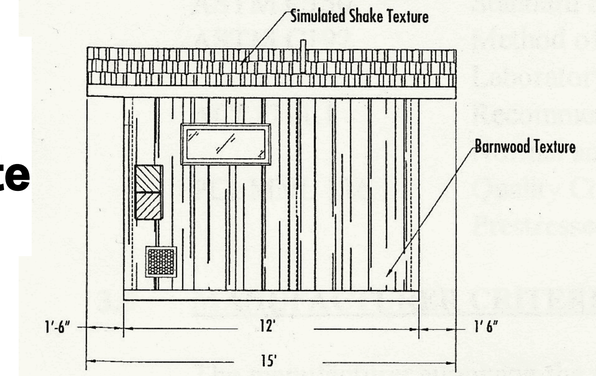

Right End Elevation

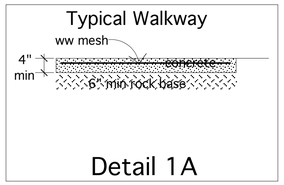

Detail 1A

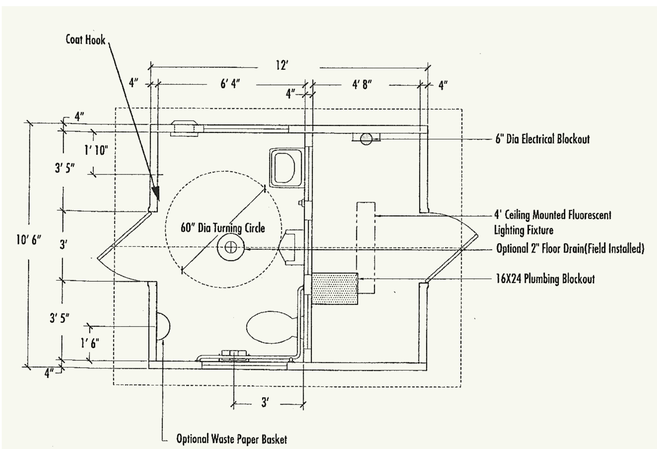

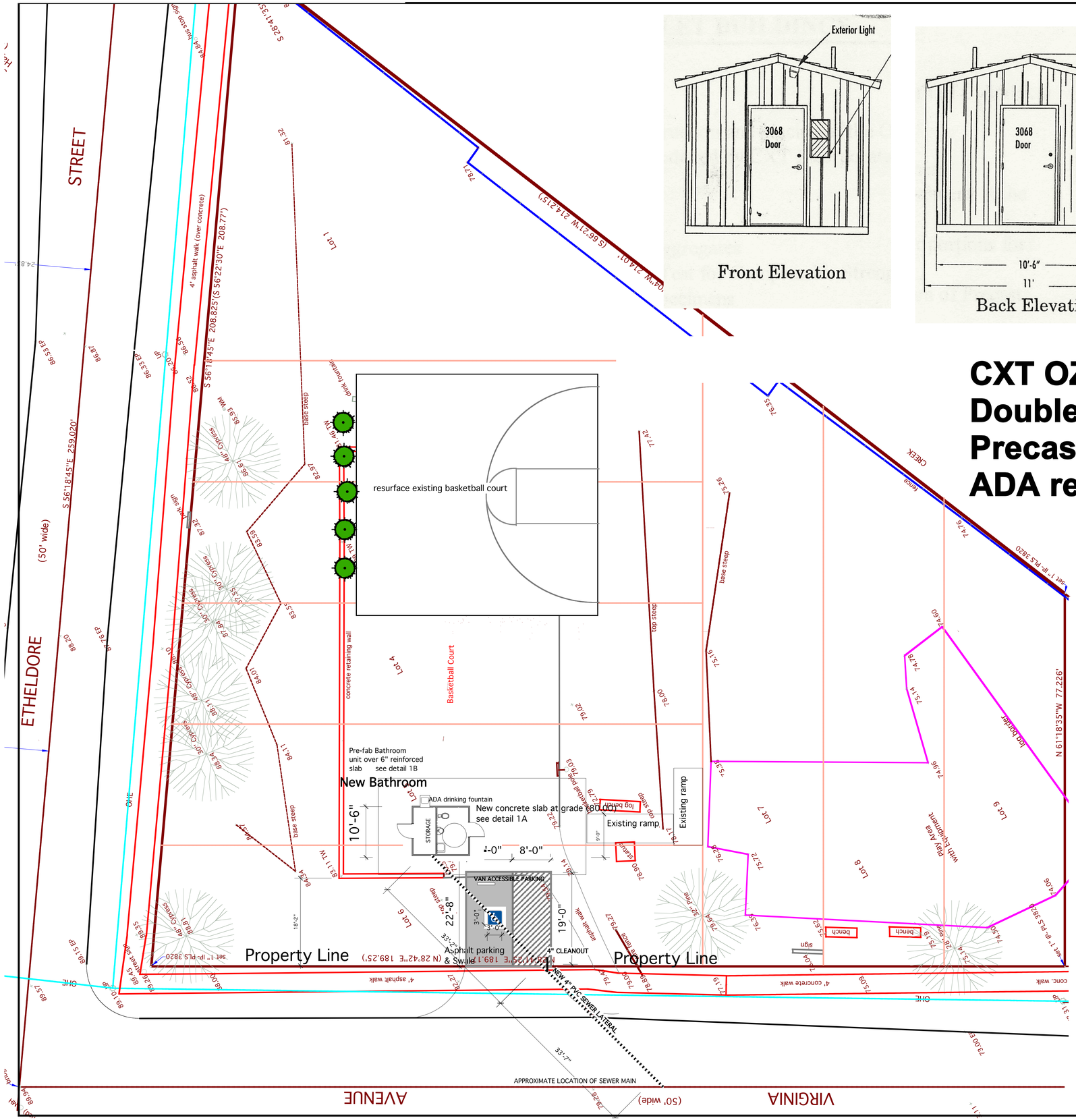

Site plan
2/20/10

Moss Beach Park

Bathroom