TEMPLATES: T352 CONCEALED VERTICAL ROD EXIT DEVICE

TEMPLATE 1 (TOP-INSIDE)

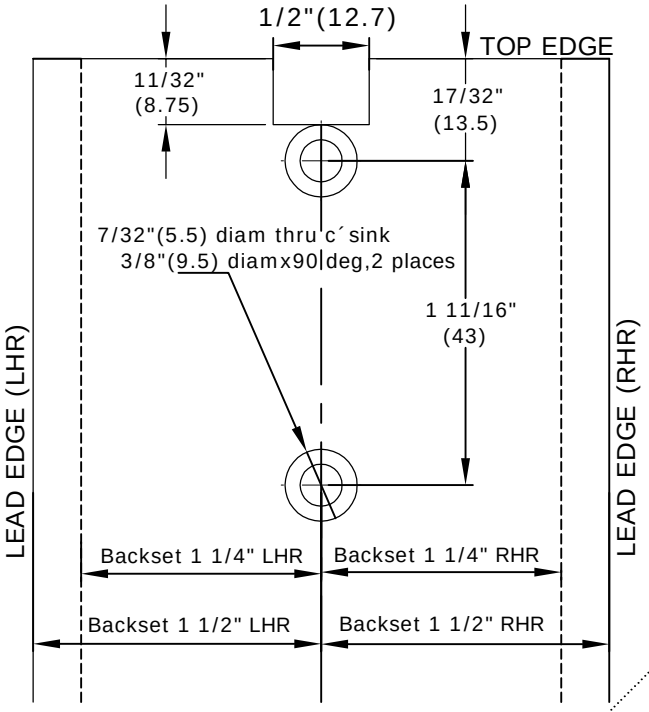

IMPORTANT: for hollow metal doors additional cuts are necessary (see the manual instructions)

()sizes in mm

TEMPLATE 2 (CENTER-INSIDE)

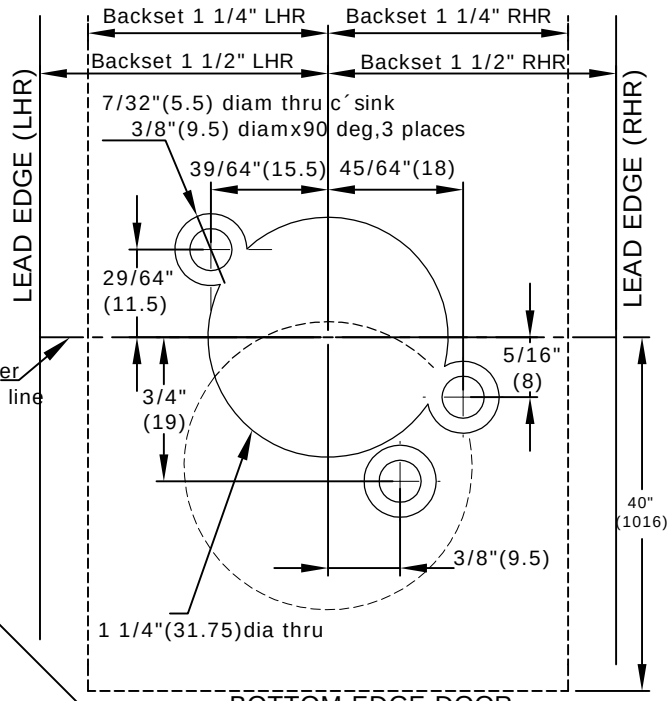

()sizes in mm

MANUAL INSTRUCTIONS

TEMPLATE 3 (BOTTOM-INSIDE)

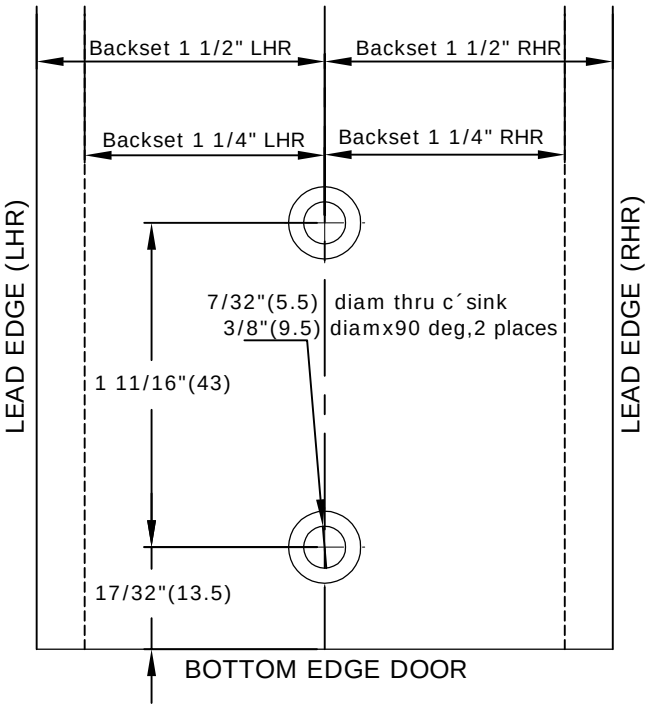

IMPORTANT: for hollow metal doors additional cuts are necessary (see the manual instructions)

( )sizes in mm

TEMPLATE 4 (CENTER-OUTSIDE)

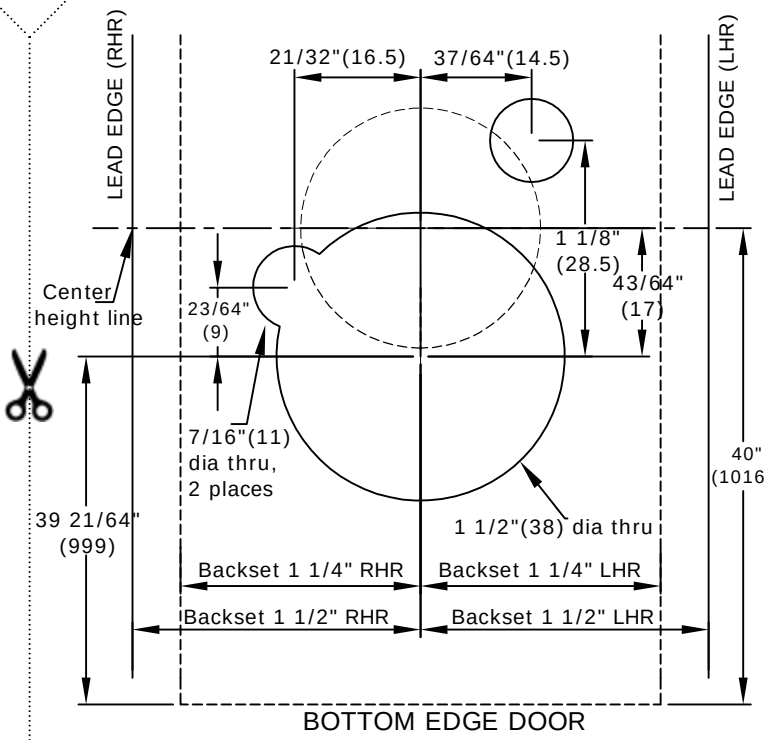

()sizes in mm