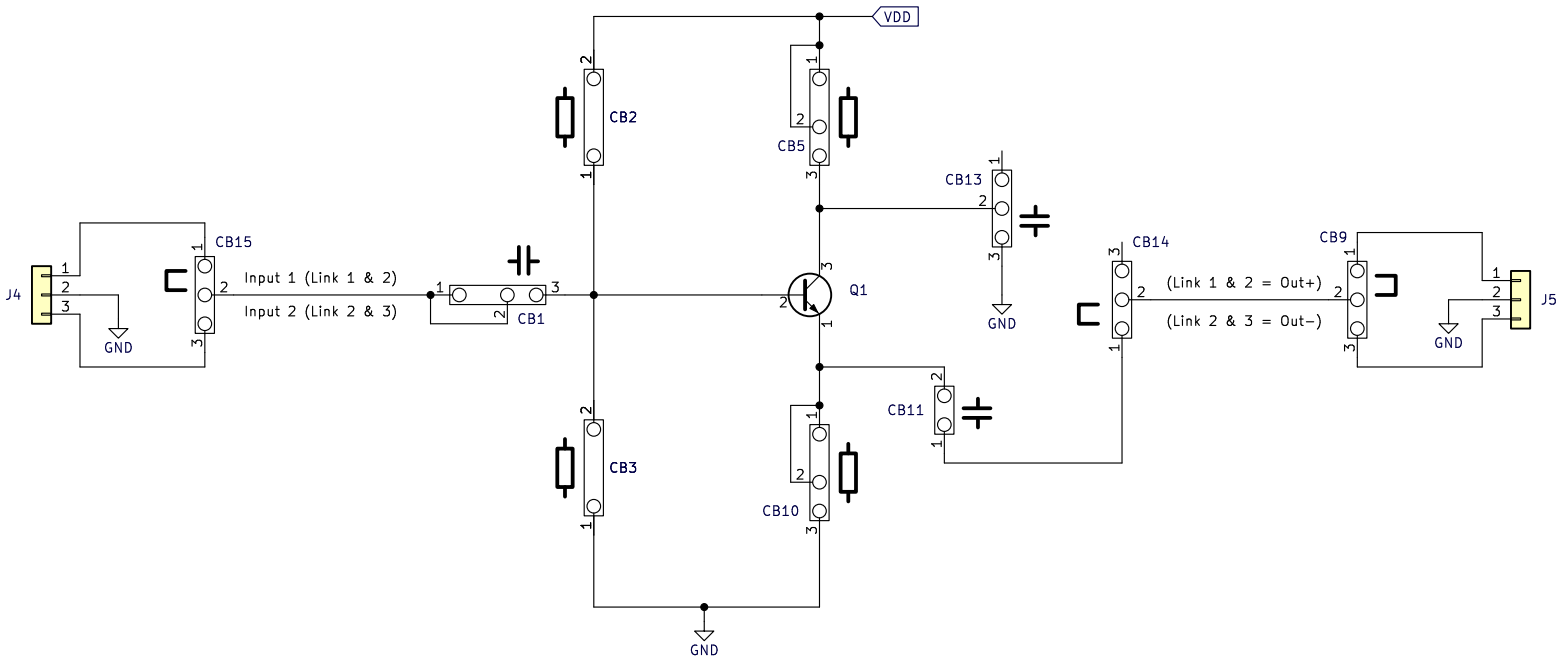

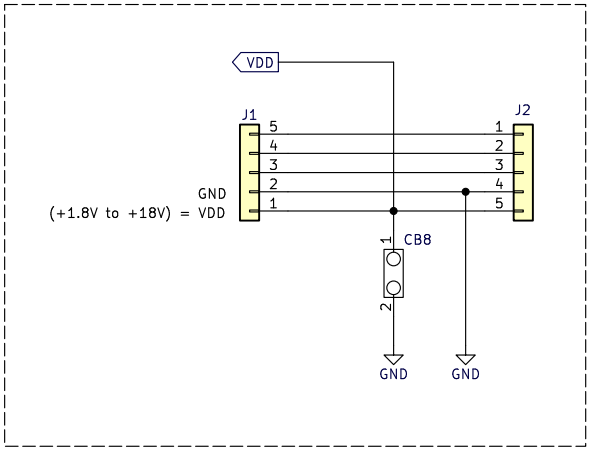

© ComponentBoard 2023

COMPONENTBOARD

Sheet: /
File: Transistor Template – Circuit 8.kicad_sch

Title: Emitter follower circuit with collector decoupling

Size: A4	Date: 30/03/2023	Rev: 1.2
		Id: 1/1