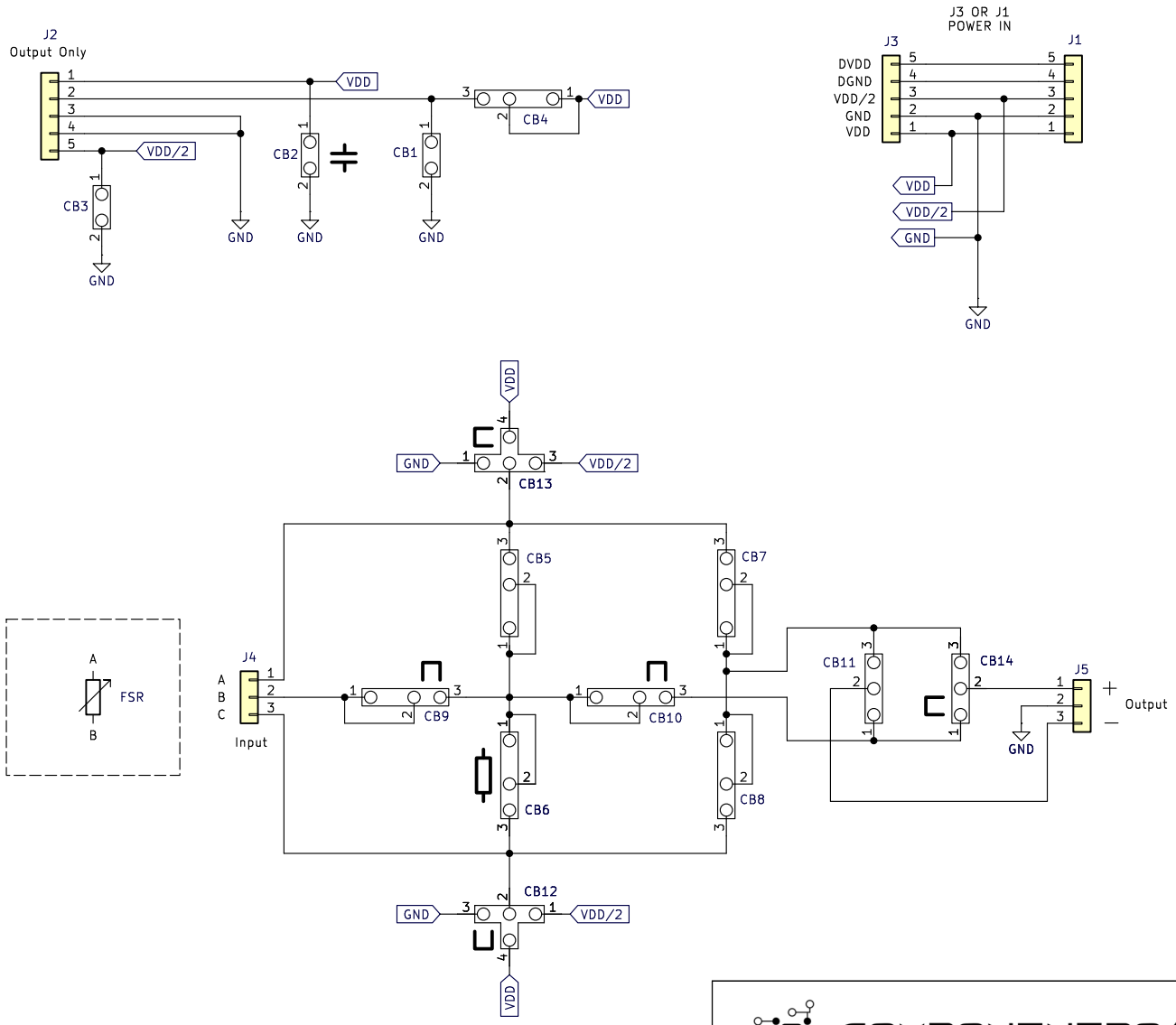

COMPONENTBOARD

Sheet: Root
File: Sensor Interface FSR.kicad_sch

Title: Sensor Interface FSR

Size: A4	Date: 2024-02-27	Rev: 1
		Id: 1/1

© ComponentBoard 2024