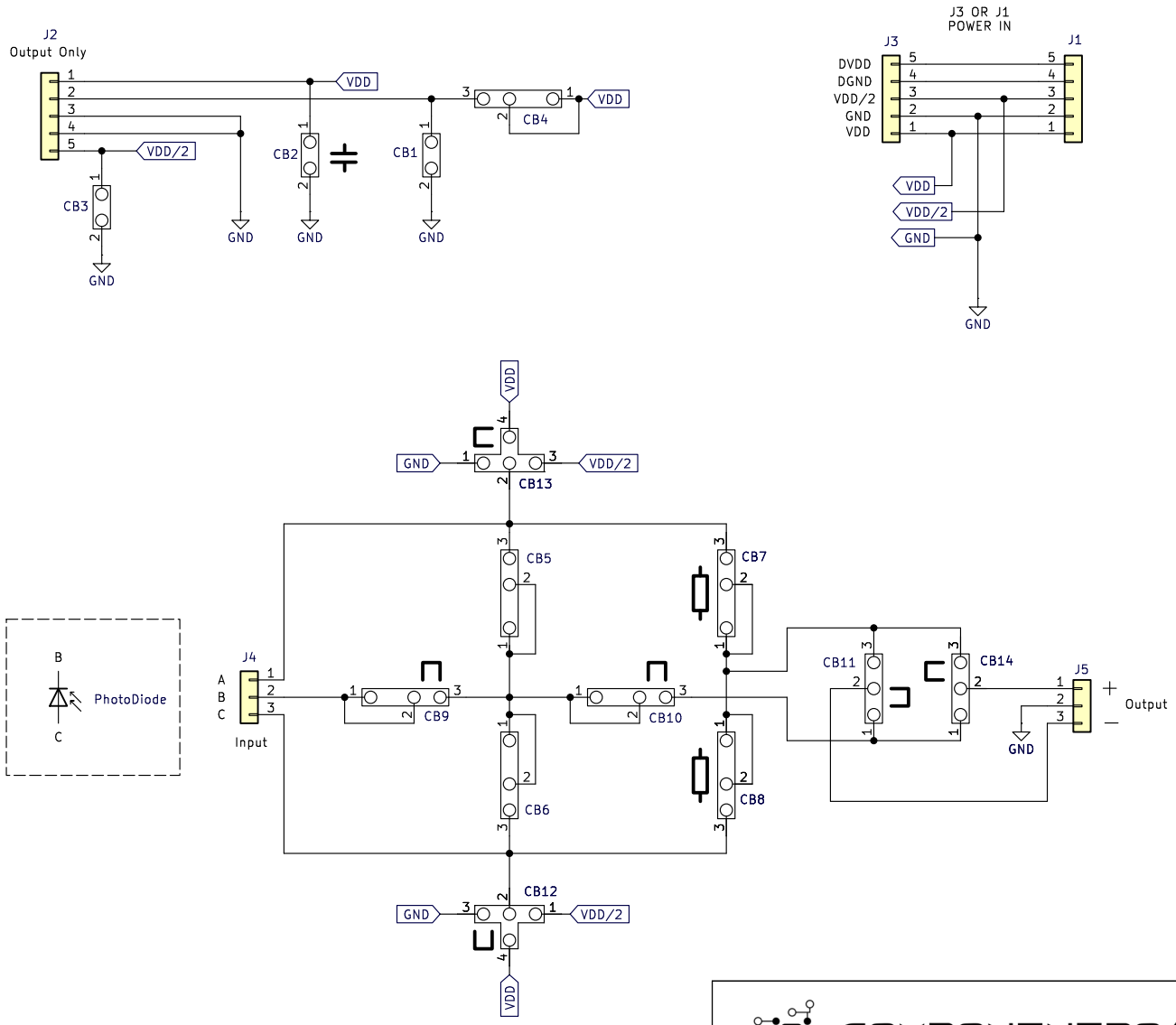


COMPONENTBOARD

Sheet: Root
File: Sensor Interface PhotoDiode.kicad_sch

**Title: Sensor Interface PhotoDiode**

| Size: A4 | Date: 2024-02-27 | Rev: 1 |
|---|---|---|
| | | Id: 1/1 |

© ComponentBoard 2024